Uhde	WIRING DIAGRAMS	Code SUEZ II	
		UAN (for QMHA) 01-3040	Attached pages total 1 of 312

WIRING DIAGRAMS

Rev	Status	Description	Date	Prepared	Date	Checked	Date	Approved	Acc.
01		AS BUILT	20.09.06	Hiescher	20.09.06	Heuer	20.09.06	Heuer	
00		First Issue	08.04.05	Hohmann	08.04.05	Dr. Kruse	08.04.05	Heuer	

Status Codes
A Issued for Information
D Issued for inquiry
E Issued for order placement
G Issued for Construction / fabrication

UD-EL-G00-FS-0001

FS 01-3040-10418047 P000 R01

Copyright 2003 Uhde GmbH

Doc. ID-Code
UD-EL-G00-FS-0001

Category

I:\Ei-ET\DH_el-wiring-diag\01-3040_Wiring_diagrams_coversheet_01.doc

CONTENTS

Tag No.	Rev.	Crossreference: See	Remarks	File No.
301K001-M01	01			
301U001-EH1	01			
301U001-M01	01			
301U001-M02	01			
302MT01-M01	01			
302P001AM01	01			
302P001BM01	01			
302U001-EH1	01			
302U001-EH2	01			
302U001-M01	01			
302U001-M02	01			
302U001-M03	01			
303K001-M01	01			
303K002-M01	01			
303P001AM01	01			
303P001BM01	01			
305D001-M01	01			
305E003-M01	01			
305E003-M02	01			
305P001AM01	01			
305P001BM01	01			
305P002AM01	01			
305P002BM01	01			
305P003AM01	01			
305P003BM01	01			
305P004-M01	01			
305P005-M01	01			
307MT01-M01	01			
307P001AM01	01			
307P001BM01	01			
307U001-EH1	01			
307U001-EH2	01			
307U001-EH3	01			
307U001-M01	01			
307U001-M02	01			
307U001-M03	01			
307U001-M04	01			
307U001-M05	01			
307U004-EH1	01			
307U004-M01	01			

E:\Ei-ET\DH_el-wiring-diag\01-3040_Wiring_diagrams_coversheet_01.doc

CONTENTS

Tag No.	Rev.	Crossreference: See	Remarks	File No.
309MT01-M01	01			
309P001AM01	01			
309P001BM01	01			
309U001-EH1	01			
309U001-EH2	01			
309U001-EH3	01			
309U001-M01	01			
309U001-M02	01			
310P001AM01	01			
310P001BM01	01			
310P002AM01	01			
310P002BM01	01			
310P003AM01	01			
310P003BM01	01			
320K001-M01	01			
320MT02-M01	01			
320P001AM01	01			
320P001BM01	01			
320P005AM01	01			
320P005BM01	01			
320U001-EH1	01			
320U001-EH2	01			
320U001-M01	01			
320U001-M02	01			
320U001-M03	01			
321P002AM01	01			
321P002AM02	01			
321P002AM03	01			
321P002BM01	01			
321P002BM02	01			
321P002BM03	01			
322P002AM01	01			
322P002BM01	01			
322Y001P51-M01	01			
323P001AM01	01			
323P001AM02	01			
323P001AM03	01			
323P001BM01	01			
323P001BM02	01			
323P001BM03	01			
323P003AM01	01			
323P003BM01	01			
323P008AM01	01			
323P008BM01	01			

Copyright 2001 Krupp Uhde GmbH

I:\Ei-ETDH_el-wiring-diag\01-3040_Wiring_diagrams_coversheet_01.doc

CONTENTS

Tag No.	Rev.	Crossreference: See	Remarks	File No.
328P002AM01	01			
328P002BM01	01			
328P003AM01	01			
328P003BM01	01			
328P006AM01	01			
328P006BM01	01			
328P007AM01	01			
328P007BM01	01			
329P001AM01	01			
329P001BM01	01			
329P002AM01	01			
329P002BM01	01			
329P003AM01	01			
329P003BM01	01			
329P004AM01	01			
329P004BM01	01			
329P006AM01	01			
329P006BM01	01			
329U001-M01	01			
329U001-M02	01			
335F001-M01	01			
335F001-M02	01			
335F002-M01	01			
335H002AM01	01			
335H002BM01	01			
335H008AM01-M02	01			
335H008BM01-M02	01			
335H008CM01-M02	01			
335H008DM01-M02	01			
335H011-M01	01			
335H012-M01	01			
335H013-H01	00			
335H013-M01	00			
335K001-M01	01			
335K002-EH1	01			
335K002-M01	01			
335K002-M02	01			
335K002-M03	01			
335K002-M04	01			
335K002-M05	01			
335K002-M06	01			
335K003-M01	01			
335K004-M01	01			
335K005-M01	01			
335K006-M01	01			
335K007-M01	01			
335N001-M01	01			

I:\Ex-f\UH_el-wiring-diag\01-3040_Wiring_diagrams_coversheet_01.doc

CONTENTS

Tag No.	Rev.	Crossreference: See	Remarks	File No.
335P001AM01	01			
335P001BM01	01			
335P002AM01	01			
335P002BM01	01			
335P003AM01	01			
335P003BM01	01			
335P004AM01	01			
335P004BM01	01			
335P005AM01	01			
335P005BM01	01			
335P006-M01	01			
335S004AM01	01			
335S004BM01	01			
335S004CM01	01			
335S004DM01	01			
335S006ARM1	00			
335S006BRM1	00			
371H001-H01	01			
371H001-M01	01			
371H003-H01	01			
371H003-M01	01			
380P001AM01	01			
380P001BM01	01			
380P002AM01	01			
380P002BM01	01			
381A001-EH1	01			
381A001-M01	01			
381K001AEH1	01			
381K001AM01	01			
381K001BEH1	01			
381K001BM01	01			
381P001AM01	01			
381P001BM01	01			
381T001-RM1	00			
382P001BM01	01			
382U001-EH1	01			
382U001-M01	01			
382U001-M02	01			
382U002-M01	01			
382U002-M02	01			
382U002-M03	01			
382U003-EH1	01			
382U003-M01	01			
382U004-M01	01			
382U004-M02	01			

Copyright 2001 Krupp Uhde GmbH

I:\EL-ET\DH_el-wiring-diag\01-3040_Wiring_diagrams_coversheet_01.doc

CONTENTS

Tag No.	Rev.	Crossreference: See	Remarks	File No.
383K001-M01	01			
383K002AM01	01			
383K002BM01	01			
384E010-M01	01			
384K001AM01	01			
384K001BM01	01			
384P010-M01	01			
385AE11-RM1	00			
385CB11-S1	01			
385CE11	00			
385MT-M01	01			
385MT-M02	01			
385P001AM01	01			
385P001BM01	01			
385U001-EH1	01			
385U001-M01	01			
385U001-M02	01			
385U001-M03	01			
386K001-M01	02			
388HV611-M01	01			
388HV612-M01	01			
388HV613-M01	01			
388HV621-M01	01			
388HV622-M01	01			
388HV623-M01	01			
388K001AM01	01			
388K001BM01	01			
388K001CM01	01			
388K002AM01	01			
388K002BM01	01			
388K002CM01	01			
388K002DM01	01			
388K002EM01	01			
388K002FM01	01			
388K003AM01	01			
388K003BM01	01			
388P001AM01	01			
388P001BM01	01			
388P001CM01	01			
388P002AM01	01			
388P002BM01	01			
388P002CM01	01			
388P003-M01	01			
388P004-M01	01			
388P005AM01	01			

I:\Ej-ET\DH_el-wiring-diag\01-3040_Wiring_diagrams_coversheet_01.doc

CONTENTS

Tag No.	Rev.	Crossreference: See	Remarks	File No.
388P005BM01	01			
388P006AM01	01			
388P006BM01	01			
388P007AM01	01			
388P007BM01	01			
388P009AM01	01			
388P009BM01	01			
388P014AM01	01			
388P014BM01	01			
389P002-M01	01			
389P003AM01	01			
389P003BM01	01			
389P003CM01	01			
390D005-EH1	01			
390K001AM01	01			
390K001BM01	01			
390K002-M01	01			
390P001AM01	01			
390P001BM01	01			
390P002AM01	01			
390P002BM01	01			
390P002CM01	01			
390P003AM01	01			
390P003BM01	01			
390P003CM01	01			
390P004AM01	01			
390P004BM01	01			
390P005AM01	01			
390P005BM01	01			
390P006AM01	01			
390P006BM01	01			
390P007-M01	01			
390P008-M01	01			
390P009AM01	01			
390P009BM01	01			
390P014AM01	01			
390P014BM01	01			
390P015AM01	01			
390P015BM01	01			
390P017-M01	01			
390P018-M01	01			

P:\EL-ET\DH_el-wiring-diag\01-3040_Wiring_diagrams_coversheet_01.doc

CONTENTS

Tag No.	Rev.	Crossreference: See	Remarks	File No.
391P004AM01	00			
391P004BM01	00			
392P001AM01	01			
392P001BM01	01			
392P002-M01	01			
392P002-M01	01			
CU020A001-RM1-A1	00			
CU400A001-RM1-A1	00			
CU400A002-RM1-A1	00			
CU400A003-RM1-A1	00			
CU400A003-RM2-A1	00			
CU410A001-RM1-A1	00			
CU420A001-RM1-A1	00			
CU425A001-RM1-A1	00			
CU600A001-RM1-A1	00			

I:\Ei-ET-DH_el-wiring-diag\01-3040_Wiring_diagrams_coversheet_01.doc

CONTENTS

Loop Index (S 800 MOTORS) Processunit 301
Natural Gas Deslphurisation

Tag No.	Rev.	Crossreference: See	Remarks	File No.
301K001-M01	01			
301U001-EH1	01			
301U001-M01	01			
301U001-M02	01			

I:\Ei-ET\DH_el-wiring-diag\01-3040_Wiring_diagrams_coversheet_01.doc

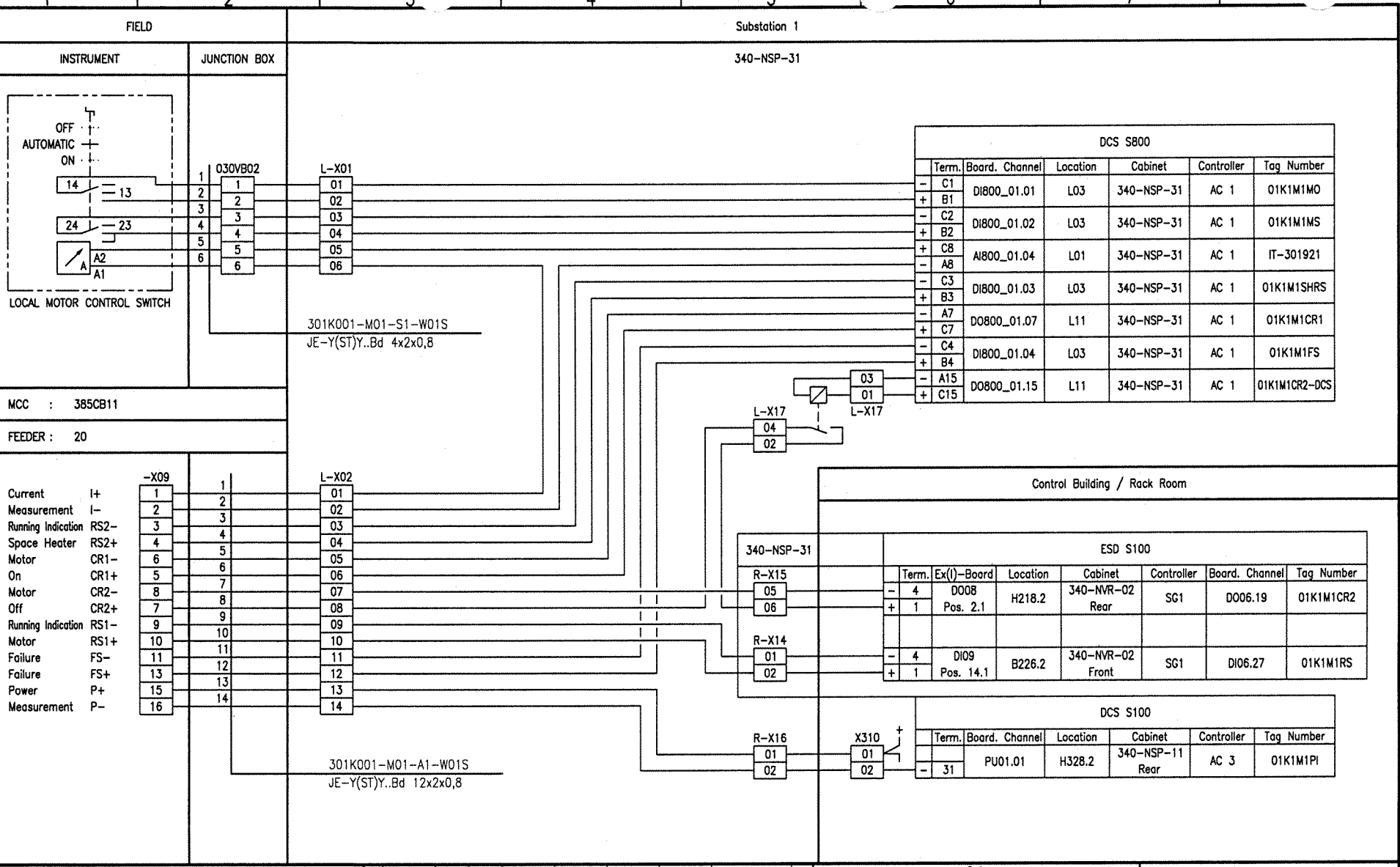

Document-ID-BAR-Code

Rev.	Date	Name (Drawn/Prepared)	Date	Name (Checked)	Date	Name (Approved)	Description	Acc. Code
01	20.09.06	Hie Hie	20.09.06	Heuer	20.09.06	Heuer	AS BUILT	

UAN	Document ID	Part	Rev.	Group
01-3040	UD-EL-G00-FS-0001		01	

Code

Uhde

All rights reserved © Uhde GmbH

Pro. Unit	TON	Cat. Code	Acc. Code	Status

Con. Unit	Type of Document	Order No.	Scale	Tot. Sheets
	DH			

	Date	Name
Drawn	07.03.2005	Hielscher
Prepared	07.03.2005	Hohmann
Checked	07.03.2005	Heuer
Approved	07.03.2005	Heuer

AMMONIA / UREA PROJECT SUEZ II

Designation
Wiring diagram
301K001-M01

Store Location: Server \\p013040\013040-ADA
Store Location: Folder \EI-ET\DH_el-wiring-diag\
Store Name 01-3040_301K001-M01_000_01.dwg

ISO A3

BORDER-A3_013040.dwg / AG03A3_013040.dwg / 17.05.2004

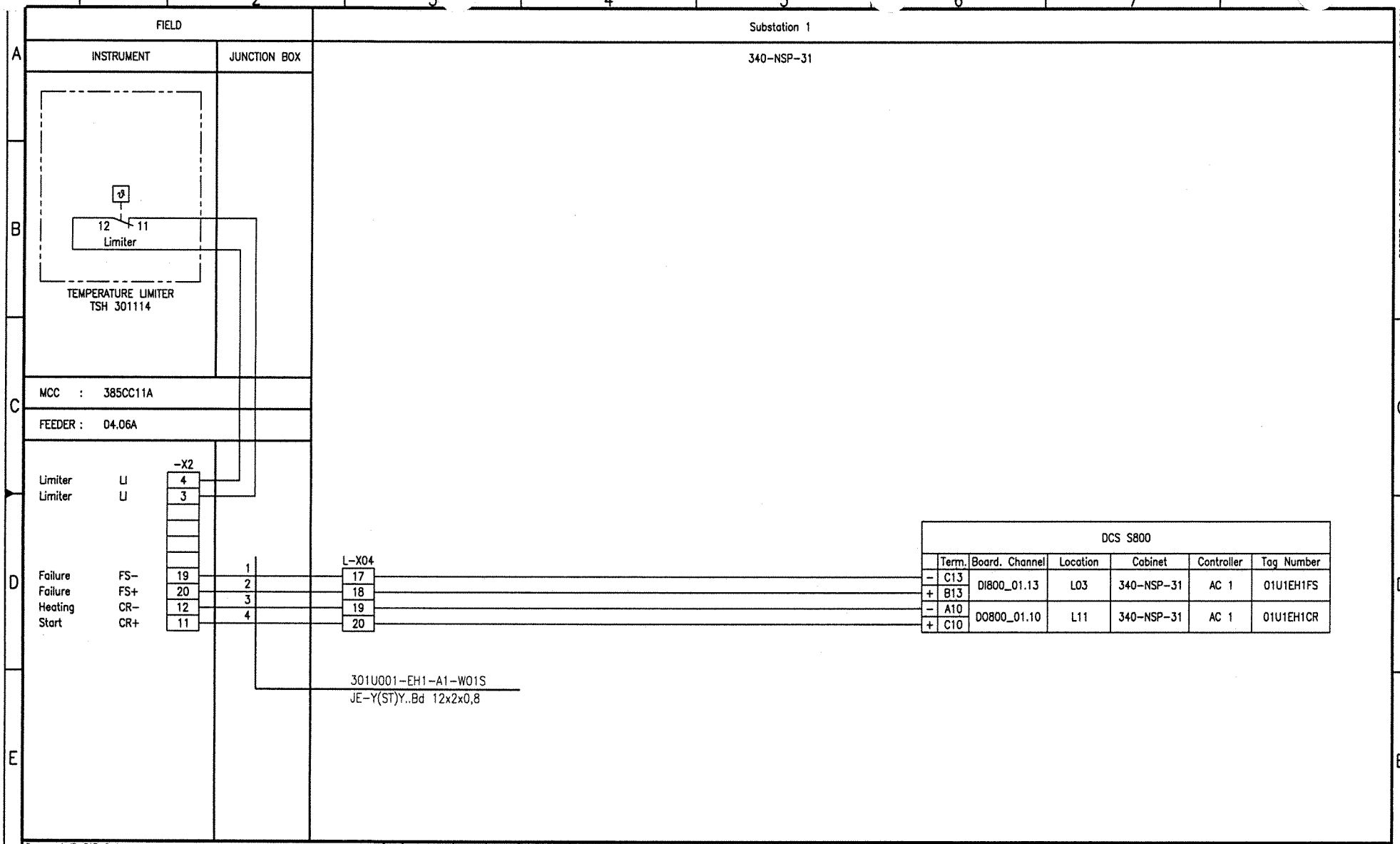

Document-ID-BAR-Code

Rev.	Date	Name (Drawn/Prepared)	Date	Name (Checked)	Date	Name (Approved)	Description	Acc. Code
01	20.09.06	Hie Hie	20.09.06	Heuer	20.09.06	Heuer	AS BUILT	

UAN	Document ID	Part	Rev.	Group
01-3040	UD-EL-G00-FS-0001		01	

Code

Uhde

All rights reserved © Uhde GmbH

Pro. Unit	TON	Cat. Code	Acc. Code	Status
Con. Unit	Type of Document: DH	Order No.	Scale	Tot. Sheets

	Date	Name
Drawn	07.03.2005	Hielscher
Prepared	07.03.2005	Hohmann
Checked	07.03.2005	Heuer
Approved	07.03.2005	Heuer

AMMONIA / UREA PROJECT SUEZ II

Designation
Wiring diagram
301U001-EH1

Store Location: Server \\p013040\013040-ADA
Store Location: Folder \Ei-ET\DH_el-wiring-diag\
Store Name 01-3040_301U001-EH1_000_01.dwg

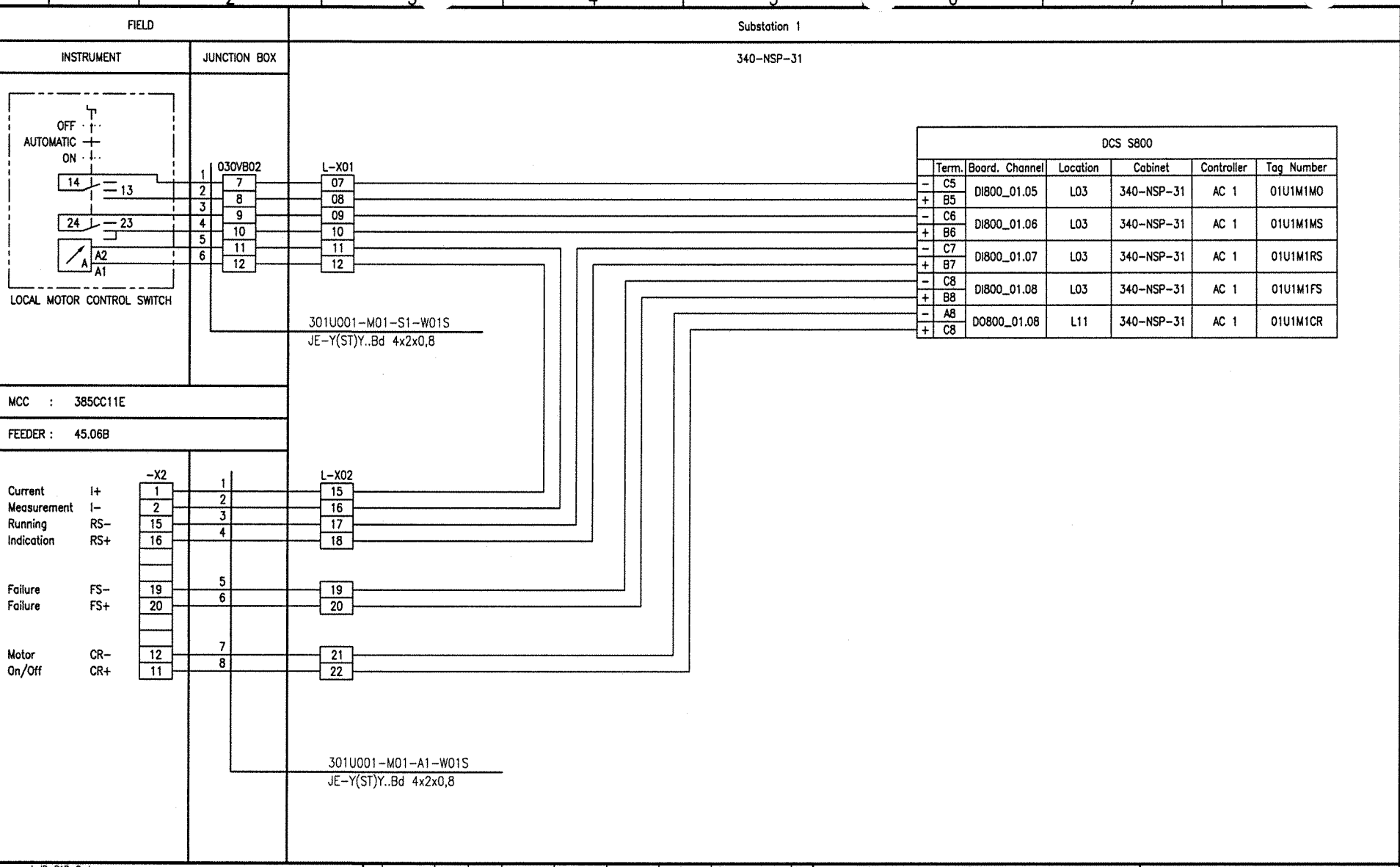

Document-ID-BAR-Code

Rev.	Date	Name	Date	Name	Date	Name	Description	Acc. Code
01	20.09.06	Hie	20.09.06	Heuer	20.09.06	Heuer	AS BUILT	
	Drawn/Prepared		Checked		Approved			

UAN	Code: Document ID	Part	Rev.	Group
01-3040	UD-EL-G00-FS-0001		01	

Uhde

All rights reserved © Uhde GmbH

Pro. Unit	TON	Cat. Code	Acc. Code	Status

Con. Unit	Type of Document	Order No.	Scale	Tot. Sheets
	DH			

	Date	Name
Drawn	07.03.2005	Hielscher
Prepared	07.03.2005	Hohmann
Checked	07.03.2005	Heuer
Approved	07.03.2005	Heuer

AMMONIA / UREA PROJECT SUEZ II

Designation
Wiring diagram
301U001-M01

Store Location: Server
\\p013040\013040-ADA

Store Location: Folder
\Ei-ET\DH_el-wiring-diag\

Store Name
01-3040_301U001-M01_000_01.dwg

ISO A3

BORDER-A3_013040.dwg / A03A3_013040.dwg / 17.05.2004

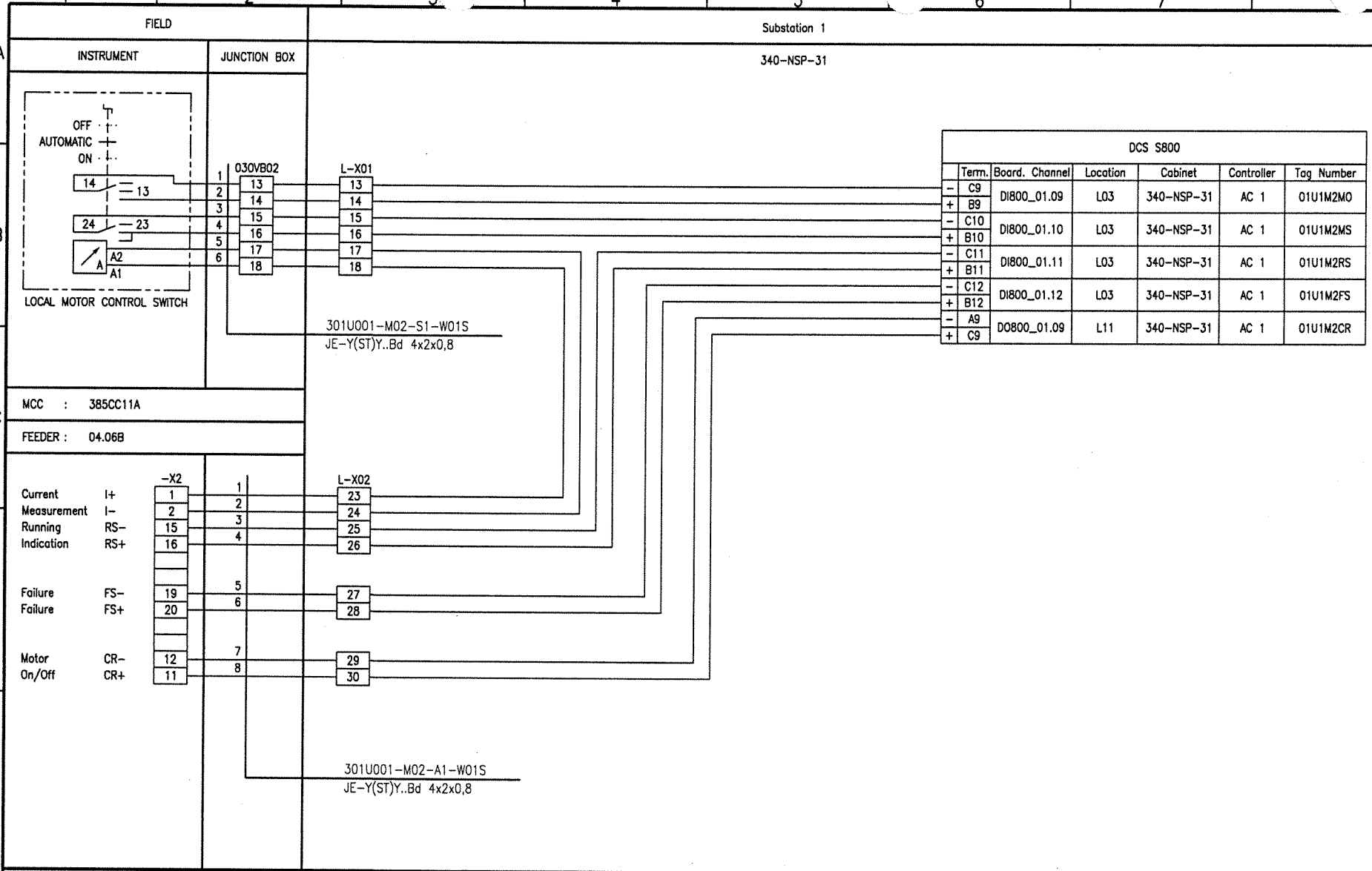

Document-ID-BAR-Code

Rev.	Date	Name (Drawn/Prepared)	Date	Name (Checked)	Date	Name (Approved)	Description	Acc. Code
01	20.09.06	Hie Hie	20.09.06	Heuer	20.09.06	Heuer	AS BUILT	

Pro. Unit	TON	Cat. Code	Acc. Code	Status
Con. Unit	Type of Document: DH	Order No.	Scale	Tot. Sheets

	Date	Name
Drawn	07.03.2005	Hielscher
Prepared	07.03.2005	Hohmann
Checked	07.03.2005	Heuer
Approved	07.03.2005	Heuer

Code: UAN 01-3040 | Document ID UD-EL-G00-FS-0001 | Part | Rev. 01 | Group

Uhde

All rights reserved © Uhde GmbH

AMMONIA / UREA PROJECT SUEZ II

Designation: Wiring diagram 301U001-M02

Store Location: Server \\p013040\013040-ADA
Store Location: Folder \EI-ET\DH_el-wiring-diag\
Store Name: 01-3040_301U001-M02_000_01.dwg

ISO A3

CONTENTS

Loop Index (S 800 MOTORS) Processunit 302
Process Air Compressor

Tag No.	Rev.	Crossreference: See	Remarks	File No.
302MT01-M01	01			
302P001AM01	01			
302P001BM01	01			
302U001-EH1	01			
302U001-EH2	01			
302U001-M01	01			
302U001-M02	01			
302U001-M03	01			

I:\Ei-ET\DH_el-wiring-diag\01-3040_Wiring_diagrams_coversheet_01.doc

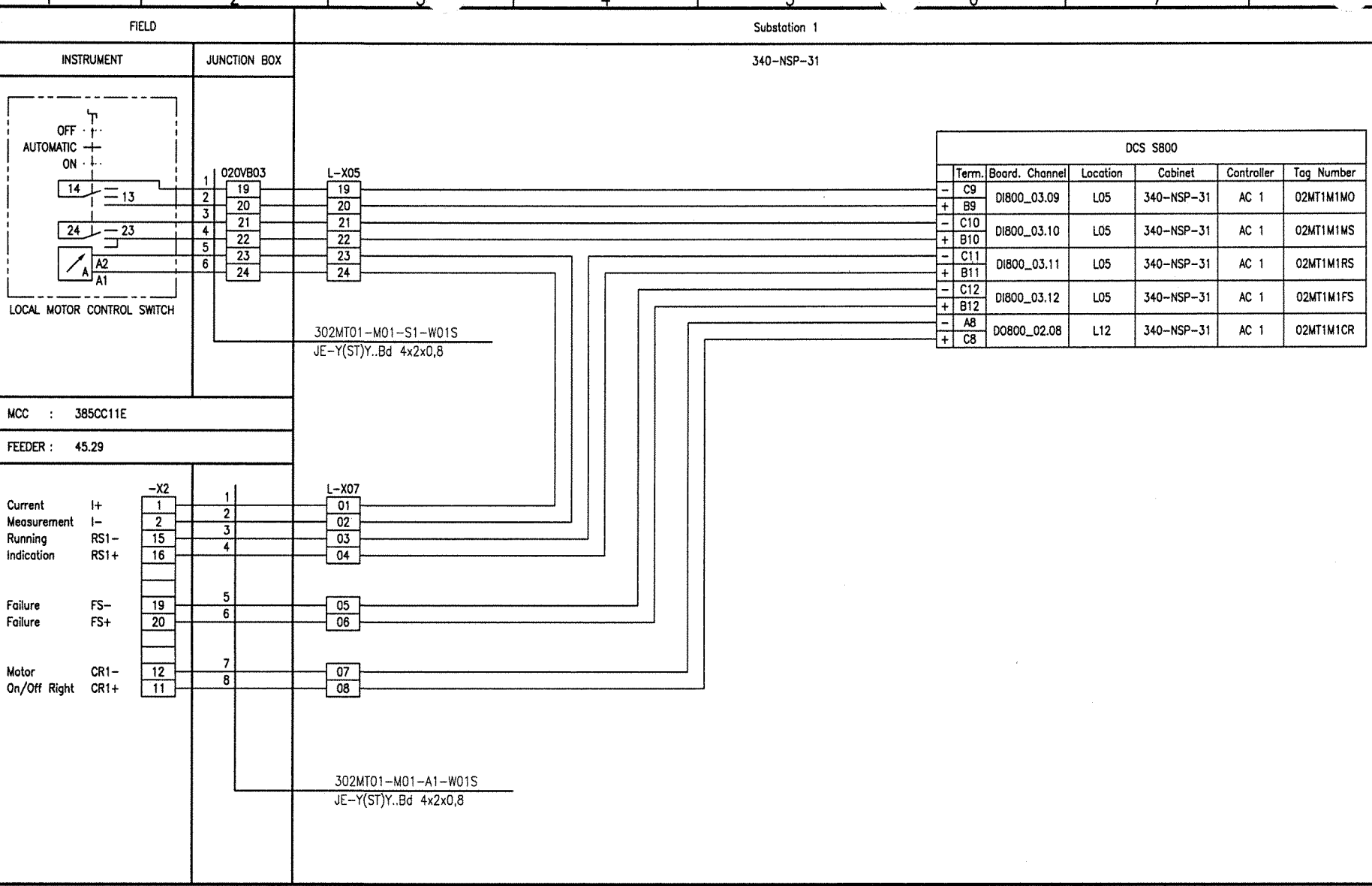

Document-ID-BAR-Code

Rev.	Date	Name	Date	Name	Date	Name	Description	Acc. Code
01	20.09.06	Hie / Hie	20.09.06	Heuer	20.09.06	Heuer	AS BUILT	
	Drawn/Prepared		Checked		Approved			

Pro. Unit	TON	Cat. Code	Acc. Code	Status
Con. Unit	Type of Document: DH	Order No.	Scale	Tot. Sheets

	Date	Name
Drawn	07.03.2005	Hielscher
Prepared	07.03.2005	Hohmann
Checked	07.03.2005	Heuer
Approved	07.03.2005	Heuer

Code: UAN 01-3040 | Document ID UD-EL-G00-FS-0001 | Port | Rev. 01 | Group

Uhde

All rights reserved © Uhde GmbH

AMMONIA / UREA PROJECT SUEZ II

Designation: Wiring diagram 302MT01-M01

Store Location: Server \\p013040\013040-ADA
Store Location: Folder \Ei-ET\DH_el-wiring-diag\
Store Name 01-3040_302MT01-M01_000_01.dwg

ISO A3

BORDER-A3_013040.dwg / A003A3_013040.dwg / 17.05.2004

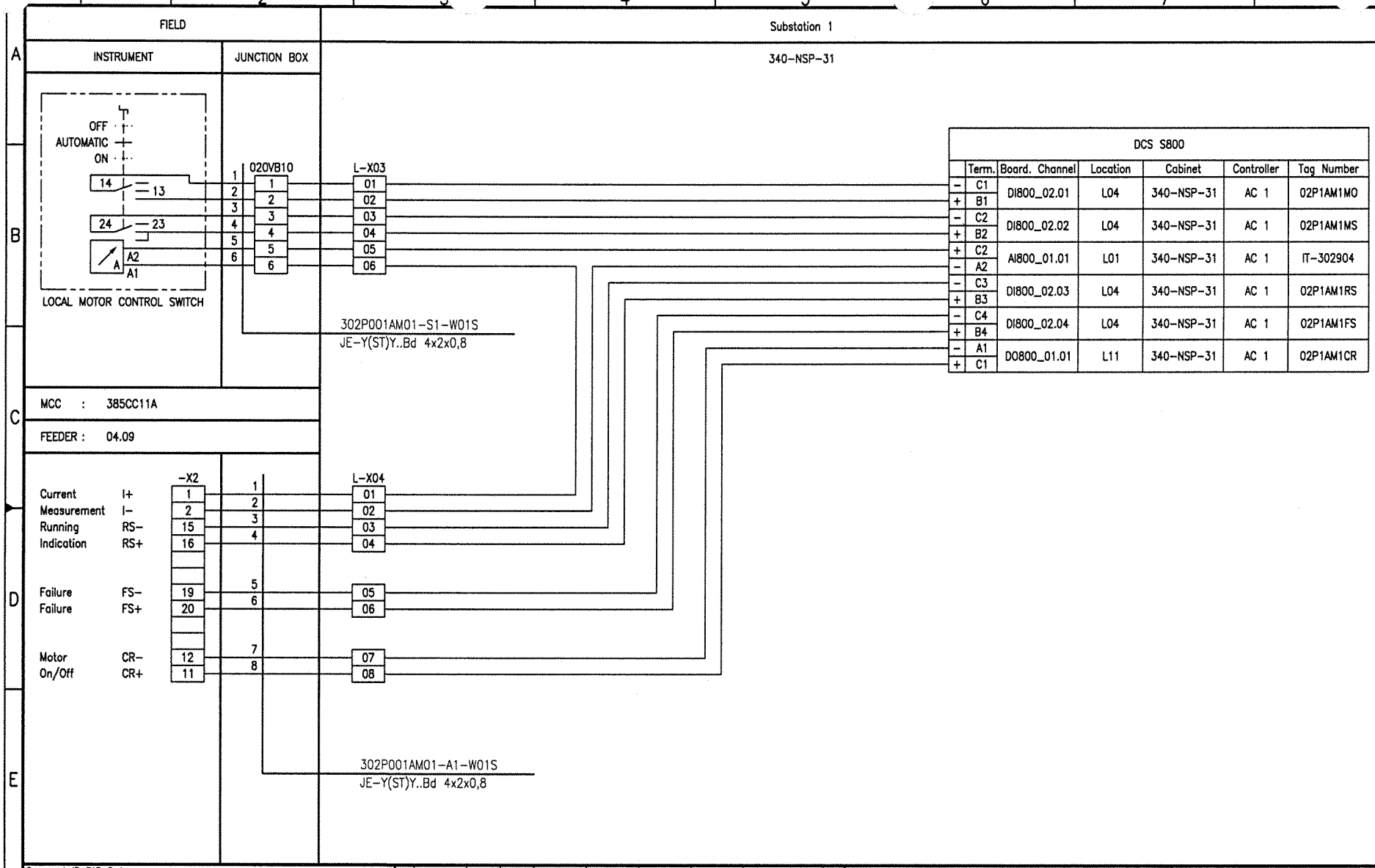

Document-ID-BAR-Code

Rev.	Date	Name (Drawn/Prepared)	Date	Name (Checked)	Date	Name (Approved)	Description	Acc. Code
01	20.09.06	Hie Hie	20.09.06	Heuer	20.09.06	Heuer	AS BUILT	

UAN	Document ID	Part	Rev.	Group
01-3040	UD-EL-G00-FS-0001		01	

Code

Pro. Unit	TON	Cat. Code	Acc. Code	Status

Con. Unit	Type of Document	Order No.	Scale	Tot. Sheets
	DH			

	Date	Name
Drawn	07.03.2005	Hielscher
Prepared	07.03.2005	Hohmann
Checked	07.03.2005	Heuer
Approved	07.03.2005	Heuer

Uhde

All rights reserved © Uhde GmbH

AMMONIA / UREA PROJECT SUEZ II

Designation
Wiring diagram
302P001AM01

Store Location: Server \\p013040\013040-ADA
Store Location: Folder \Ei-ET\DH_el-wiring-diag\
Store Name 01-3040_302P001AM01_000_01.dwg

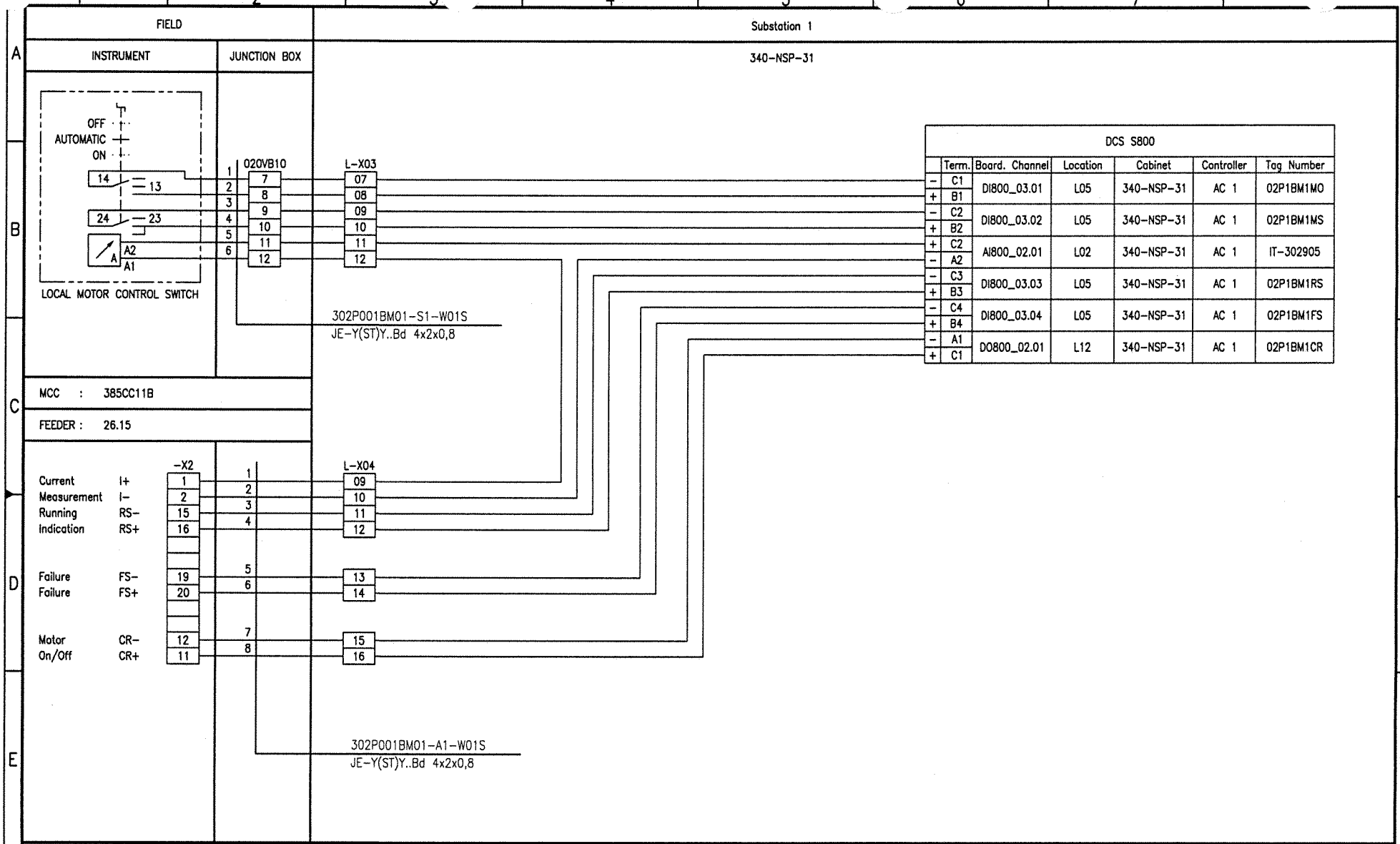

Document-ID-BAR-Code

Rev.	Date	Name	Date	Name	Date	Name	Description	Acc. Code
01	20.09.06	Hie	20.09.06	Heuer	20.09.06	Heuer	AS BUILT	
	Drawn/Prepared		Checked		Approved			

UAN	Document ID	Part	Rev.	Group
01-3040	UD-EL-G00-FS-0001		01	

Code

Pro. Unit | TON | Cat. Code | Acc. Code | Status

Con. Unit | Type of Document: DH | Order No. | Scale | Tot. Sheets

	Date	Name
Drawn	07.03.2005	Hielscher
Prepared	07.03.2005	Hohmann
Checked	07.03.2005	Heuer
Approved	07.03.2005	Heuer

Store Location: Server \\p013040\013040-ADA

Store Location: Folder \Ei-ET\DH_el-wiring-diag\

Store Name 01-3040_302P001BM01_000_01.dwg

AMMONIA / UREA PROJECT SUEZ II

Uhde

All rights reserved © Uhde GmbH

Designation
Wiring diagram
302P001BM01

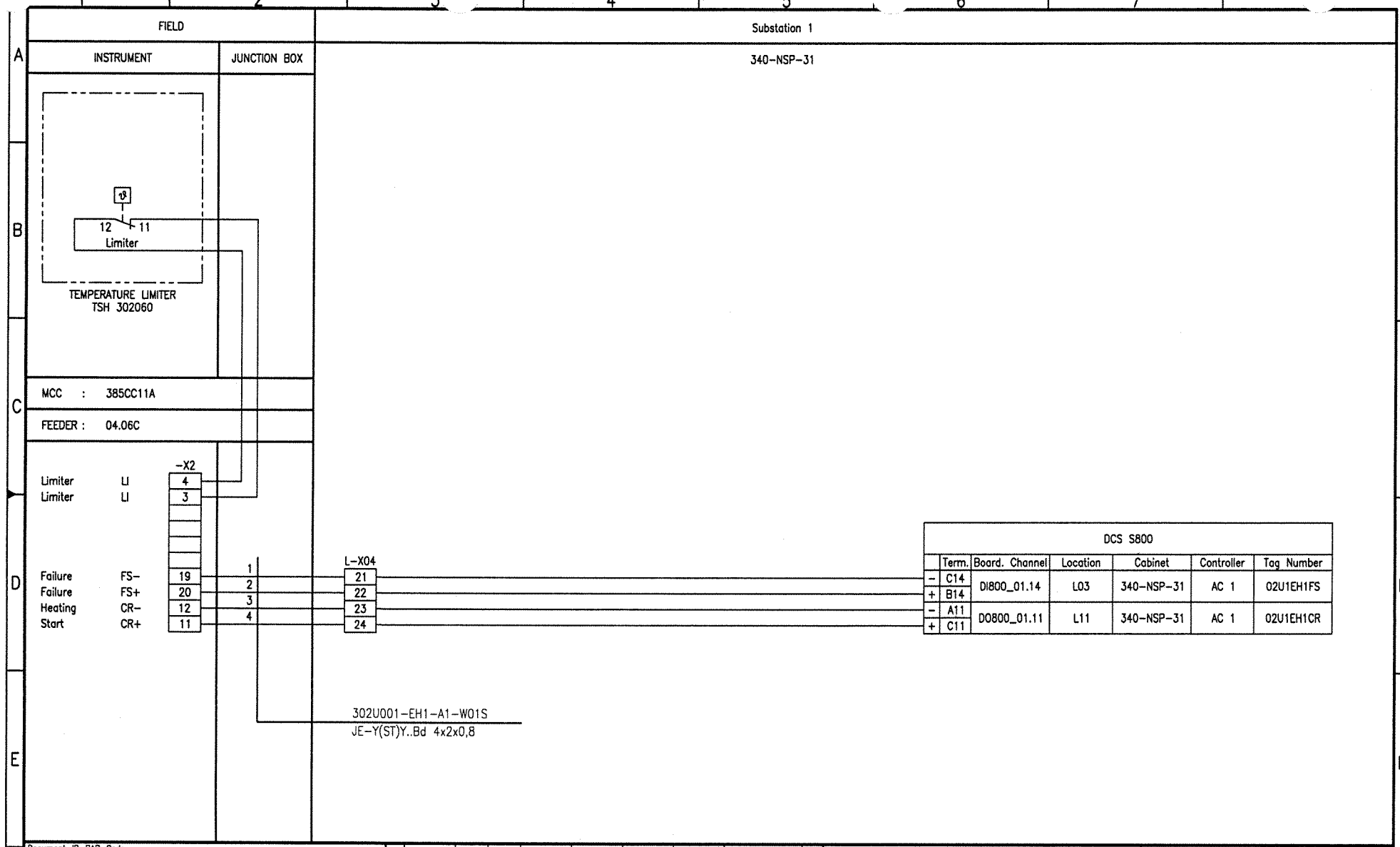

Document-ID-BAR-Code

Rev.	Date	Name	Date	Name	Date	Name	Description	Acc. Code
01	20.09.06	Hie	20.09.06	Heuer	20.09.06	Heuer	AS BUILT	
	Drawn/Prepared		Checked		Approved			

UAN	Code: Document ID	Part	Rev.	Group
01-3040	UD-EL-G00-FS-0001		01	

Uhde

All rights reserved © Uhde GmbH

Pro. Unit	TON	Cat. Code	Acc. Code	Status
Con. Unit	Type of Document: DH	Order No.	Scale	Tot. Sheets

	Date	Name
Drawn	07.03.2005	Hielscher
Prepared	07.03.2005	Hohmann
Checked	07.03.2005	Heuer
Approved	07.03.2005	Heuer

AMMONIA / UREA PROJECT SUEZ II

Designation
Wiring diagram
302U001-EH1

Store Location: Server \\p013040\013040-ADA
Store Location: Folder \EI-ET\DH_el-wiring-diag\
Store Name 01-3040_302U001-EH1_000_01.dwg

ISO A3

BORDER-A3_013040.dwg / A003A3_013040.dwg / 17.05.2004

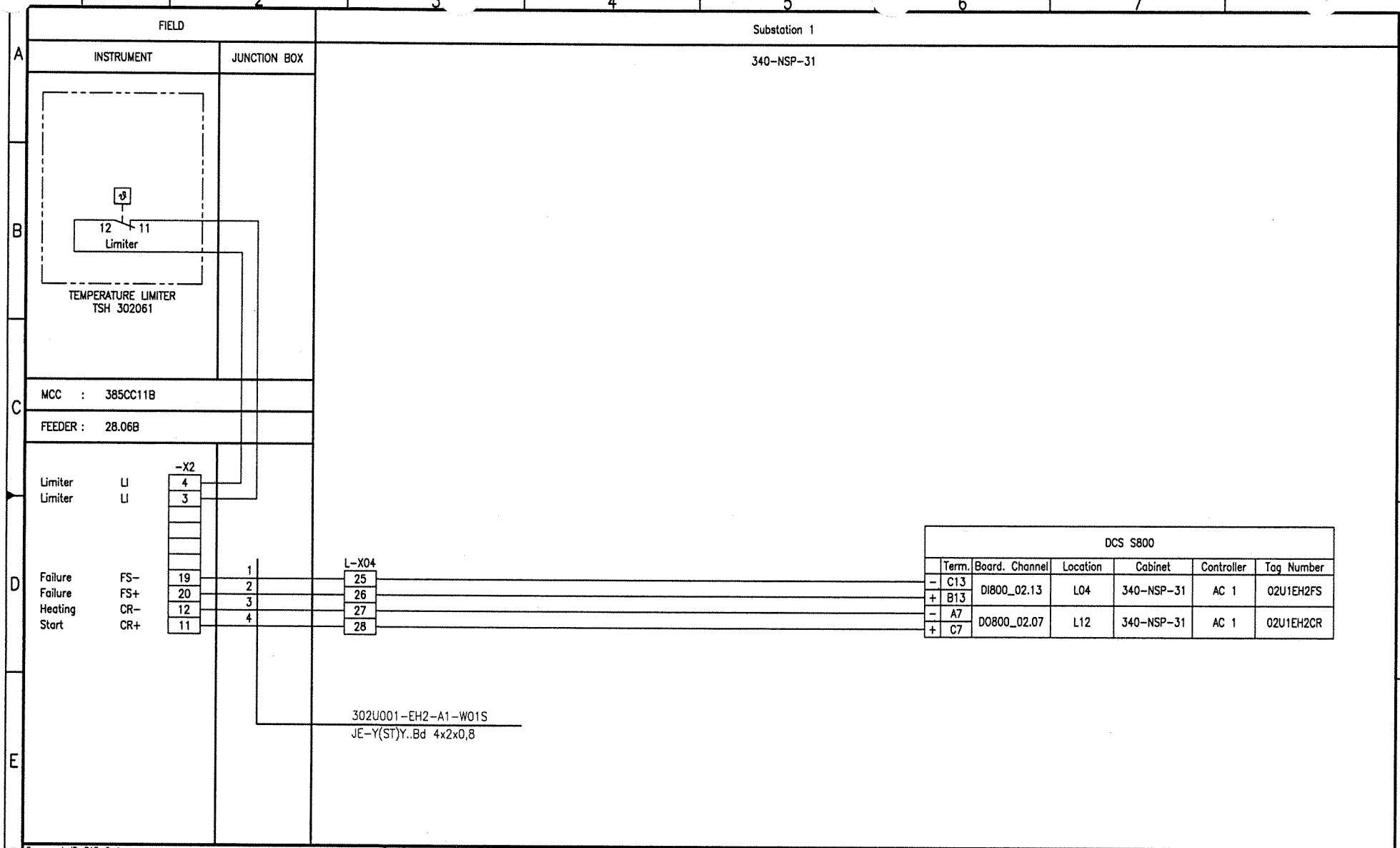
FIELD
Substation 1
INSTRUMENT
JUNCTION BOX
340-NSP-31
12
11
Limiter
TEMPERATURE LIMITER
TSH 302061
MCC : 385CC11B
FEEDER : 28.06B
-X2
Limiter LI 4
Limiter LI 3
Failure FS- 19
Failure FS+ 20
Heating CR- 12
Start CR+ 11
1
2
3
4
L-X04
25
26
27
28
DCS S800
Term.
Board. Channel
Location
Cabinet
Controller
Tag Number
- C13
+ B13
DI800_02.13
L04
340-NSP-31
AC 1
02U1EH2FS
- A7
+ C7
DO800_02.07
L12
340-NSP-31
AC 1
02U1EH2CR
302U001-EH2-A1-W01S
JE-Y(ST)Y..Bd 4x2x0,8
BORDER-A3_013040.dwg / AG03A3_013040.dwg / 17.05.2004
Document-ID-BAR-Code
01 20.09.06 Hie Hie 20.09.06 Heuer 20.09.06 Heuer AS BUILT
Rev. Date Name Date Name Date Name Description Acc. Code
Drawn/Prepared Checked Approved
UAN 01-3040
Code
Document ID UD-EL-G00-FS-0001
Part
Rev. 01
Group
Uhde
All rights reserved © Uhde GmbH
Pro. Unit TON Cat. Code Acc. Code Status
Con. Unit Type of Document DH Order No. Scale Tot. Sheets
Date Name
Drawn 07.03.2005 Hielscher
Prepared 07.03.2005 Hohmann
Checked 07.03.2005 Heuer
Approved 07.03.2005 Heuer
AMMONIA / UREA
PROJECT
SUEZ II
Designation
Wiring diagram
302U001-EH2
Store Location: Server
\\p013040\013040-ADA
Store Location: Folder
\Ei-ET\DH_el-wiring-diag\
Store Name
01-3040_302U001-EH2_000_01.dwg
ISO A3

FIELD | Substation 1

INSTRUMENT | JUNCTION BOX | 340-NSP-31

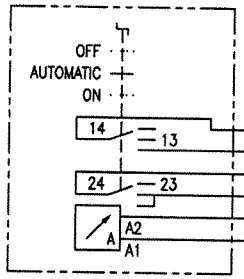

LOCAL MOTOR CONTROL SWITCH

020VB03

L-X05

302U001-M01-S1-W01S
JE-Y(ST)Y..Bd 4x2x0,8

MCC : 385CC11A

FEEDER : 04.12

-X2

L-X06

		-X2	020VB03	L-X06
Current Measurement	I+	1	1	01
	I-	2	2	02
Running Indication	RS-	15	3	03
	RS+	16	4	04
Failure	FS-	19	5	05
Failure	FS+	20	6	06
Motor On/Off	CR-	12	7	07
	CR+	11	8	08

302U001-M01-A1-W01S
JE-Y(ST)Y..Bd 4x2x0,8

DCS S800

	Term.	Board. Channel	Location	Cabinet	Controller	Tag Number
-	C5	DI800_02.05	L04	340-NSP-31	AC 1	02U1M1MO
+	B5					
-	C6	DI800_02.06	L04	340-NSP-31	AC 1	02U1M1MS
+	B6					
+	C10	AI800_01.05	L01	340-NSP-31	AC 1	IT-302907
-	A10					
-	C7	DI800_02.07	L04	340-NSP-31	AC 1	02U1M1RS
+	B7					
-	C8	DI800_02.08	L04	340-NSP-31	AC 1	02U1M1FS
+	B8					
-	A13	DO800_01.13	L11	340-NSP-31	AC 1	02U1M1CR
+	C13					

Document-ID-BAR-Code

Rev.	Date	Name (Drawn/Prepared)	Date	Name (Checked)	Date	Name (Approved)	Description	Acc. Code
01	20.09.06	Hie Hie	20.09.06	Heuer	20.09.06	Heuer	AS BUILT	

UAN 01-3040 | Code: Document ID UD-EL-G00-FS-0001 | Part | Rev. 01 | Group

Uhde

All rights reserved © Uhde GmbH

Pro. Unit	TON	Cat. Code	Acc. Code	Status
Con. Unit	Type of Document: DH	Order No.	Scale	Tot. Sheets

	Date	Name
Drawn	07.03.2005	Hielscher
Prepared	07.03.2005	Hohmann
Checked	07.03.2005	Heuer
Approved	07.03.2005	Heuer

AMMONIA / UREA PROJECT SUEZ II

Designation: Wiring diagram 302U001-M01

Store Location: Server \\p013040\013040-ADA

Store Location: Folder \EI-ET\DH_el-wiring-diag\

Store Name: 01-3040_302U001-M01_000_01.dwg

ISO A3

BORDER-A3_013040.dwg / A003A3_013040.dwg / 17.05.2004

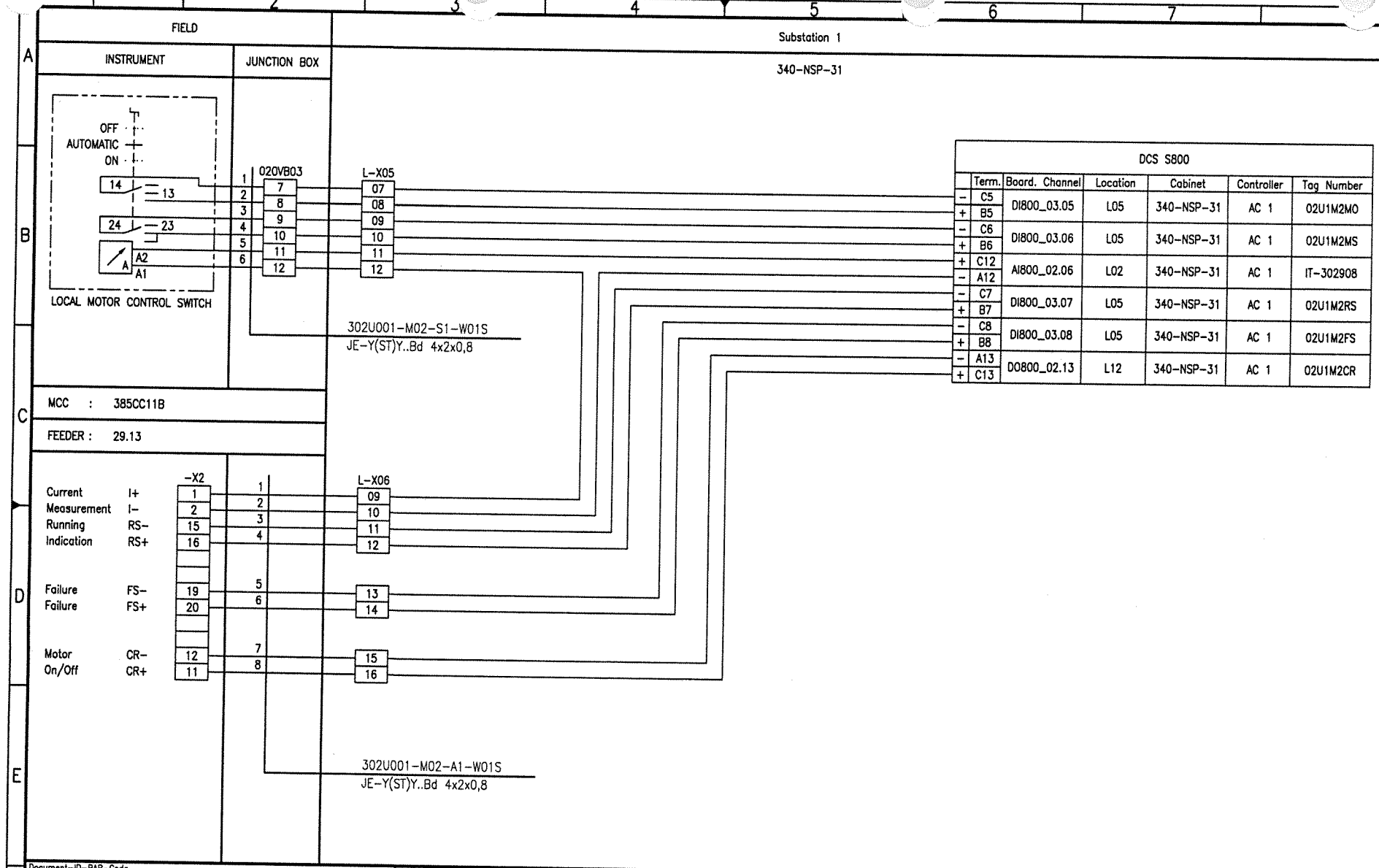

Document-ID-BAR-Code

Rev.	Date	Name (Drawn/Prepared)	Date	Name (Checked)	Date	Name (Approved)	Description	Acc. Code
01	20.09.06	Hie Hie	20.09.06	Heuer	20.09.06	Heuer	AS BUILT	

UAN 01-3040 | Document ID UD-EL-G00-FS-0001 | Part | Rev. 01 | Group

Uhde

All rights reserved © Uhde GmbH

Pro. Unit	TON	Cat. Code	Acc. Code	Status
Con. Unit	Type of Document: DH	Order No.	Scale	Tot. Sheets

	Date	Name
Drawn	07.03.2005	Hielscher
Prepared	07.03.2005	Hohmann
Checked	07.03.2005	Heuer
Approved	07.03.2005	Heuer

AMMONIA / UREA PROJECT SUEZ II

Designation: Wiring diagram 302U001-M02

Store Location: Server \\p013040\013040-ADA
Store Location: Folder \EI-ET\DH_el-wiring-diag\
Store Name 01-3040_302U001-M02_000_01.dwg

ISO A3

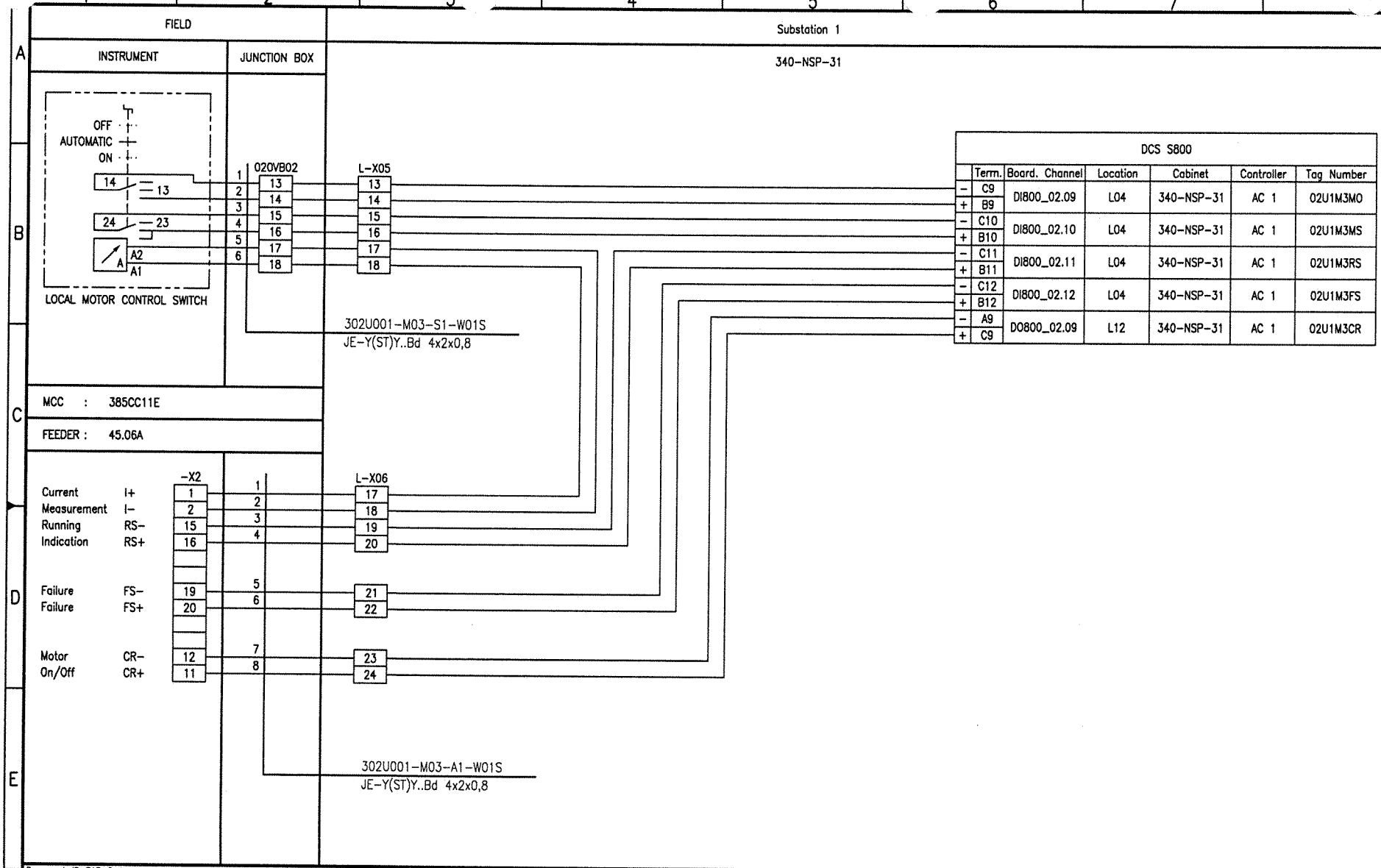

Document-ID-BAR-Code

Rev.	Date	Name (Drawn/Prepared)	Date	Name (Checked)	Date	Name (Approved)	Description	Acc. Code
01	20.09.06	Hie Hie	20.09.06	Heuer	20.09.06	Heuer	AS BUILT	

UAN	Document ID	Part	Rev.	Group
01-3040	UD-EL-G00-FS-0001		01	

Code

Uhde

All rights reserved © Uhde GmbH

Pro. Unit: TON | Cat. Code | Acc. Code | Status

Con. Unit | Type of Document: DH | Order No. | Scale | Tot. Sheets

	Date	Name
Drawn	07.03.2005	Hielscher
Prepared	07.03.2005	Hohmann
Checked	07.03.2005	Heuer
Approved	07.03.2005	Heuer

AMMONIA / UREA PROJECT SUEZ II

Designation: Wiring diagram 302U001-M03

Store Location: Server \\p013040\013040-ADA

Store Location: Folder \EI-ET\DH_el-wiring-diag\

Store Name: 01-3040_302U001-M03_000_01.dwg

ISO A3

BORDER-A3_013040.dwg / AG03A3_013040.dwg / 17.05.2004

CONTENTS

Loop Index (S 800 MOTORS) Processunit 303
Steam Reforming & Waste Heat Recovery

Tag No.	Rev.	Crossreference: See	Remarks	File No.
303K001-M01	01			
303K002-M01	01			
303P001AM01	01			
303P001BM01	01			

I:\Ej-ET\DH_el-wiring-diag\01-3040_Wiring_diagrams_coversheet_01.doc

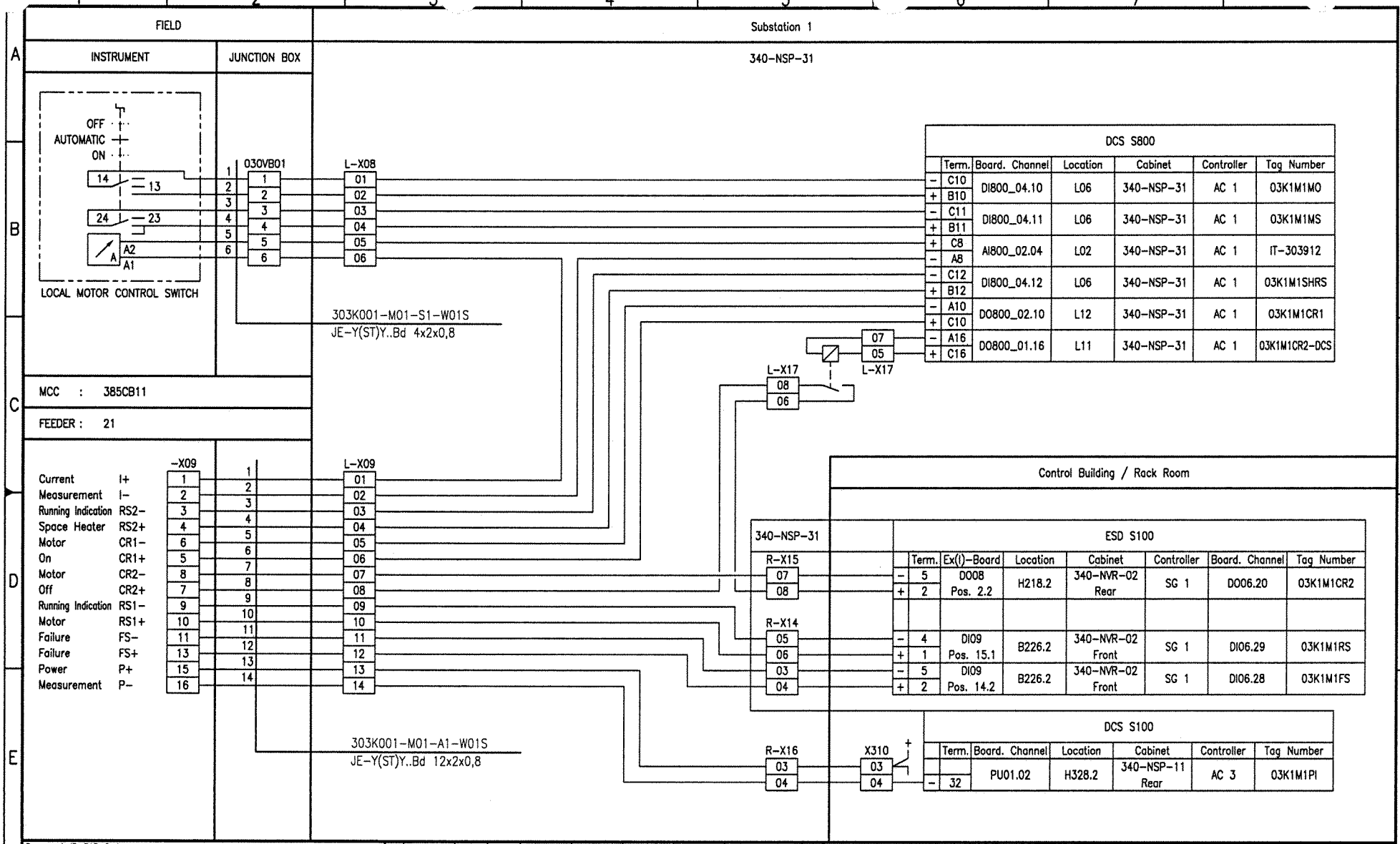
FIELD
Substation 1
INSTRUMENT
JUNCTION BOX
340-NSP-31
OFF
AUTOMATIC
ON
14
13
24
23
A2
A1
LOCAL MOTOR CONTROL SWITCH
030VB01
L-X08
303K001-M01-S1-W01S
JE-Y(ST)Y..Bd 4x2x0,8
DCS S800
Term. Board. Channel Location Cabinet Controller Tag Number
C10 DI800_04.10 L06 340-NSP-31 AC 1 03K1M1MO
B10
C11 DI800_04.11 L06 340-NSP-31 AC 1 03K1M1MS
B11
C8 AI800_02.04 L02 340-NSP-31 AC 1 IT-303912
A8
C12 DI800_04.12 L06 340-NSP-31 AC 1 03K1M1SHRS
B12
A10 DO800_02.10 L12 340-NSP-31 AC 1 03K1M1CR1
C10
A16 DO800_01.16 L11 340-NSP-31 AC 1 03K1M1CR2-DCS
C16
07
05
L-X17
08
06
MCC : 385CB11
FEEDER : 21
-X09
L-X09
Current I+
Measurement I-
Running Indication RS2-
Space Heater RS2+
Motor CR1-
On CR1+
Motor CR2-
Off CR2+
Running Indication RS1-
Motor RS1+
Failure FS-
Failure FS+
Power P+
Measurement P-
303K001-M01-A1-W01S
JE-Y(ST)Y..Bd 12x2x0,8
Control Building / Rack Room
340-NSP-31
R-X15
R-X14
R-X16
X310
ESD S100
Term. Ex(i)-Board Location Cabinet Controller Board. Channel Tag Number
5 DO08 Pos. 2.2 H218.2 340-NVR-02 Rear SG 1 DO06.20 03K1M1CR2
4 DI09 Pos. 15.1 B226.2 340-NVR-02 Front SG 1 DI06.29 03K1M1RS
5 DI09 Pos. 14.2 B226.2 340-NVR-02 Front SG 1 DI06.28 03K1M1FS
DCS S100
Term. Board. Channel Location Cabinet Controller Tag Number
32 PU01.02 H328.2 340-NSP-11 Rear AC 3 03K1M1PI
Document-ID-BAR-Code
01 20.09.06 Hie Hie 20.09.06 Heuer 20.09.06 Heuer AS BUILT
Rev. Date Name Date Name Date Name Description Acc. Code
Drawn/Prepared Checked Approved
UAN 01-3040
Document ID UD-EL-G00-FS-0001
Part Rev. 01 Group
Code
Uhde
All rights reserved © Uhde GmbH
Pro. Unit TON Cat. Code Acc. Code Status
Con. Unit Type of Document DH Order No. Scale Tot. Sheets
Drawn 07.03.2005 Hielscher
Prepared 07.03.2005 Hohmann
Checked 07.03.2005 Heuer
Approved 07.03.2005 Heuer
AMMONIA / UREA PROJECT SUEZ II
Designation
Wiring diagram 303K001-M01
Store Location: Server \\p013040\013040-ADA
Store Location: Folder \EI-ET\DH_el-wiring-diag\
Store Name 01-3040_303K001-M01_000_01.dwg
ISO A3
BORDER-A3_013040.dwg / A03A3_013040.dwg / 17.05.2004

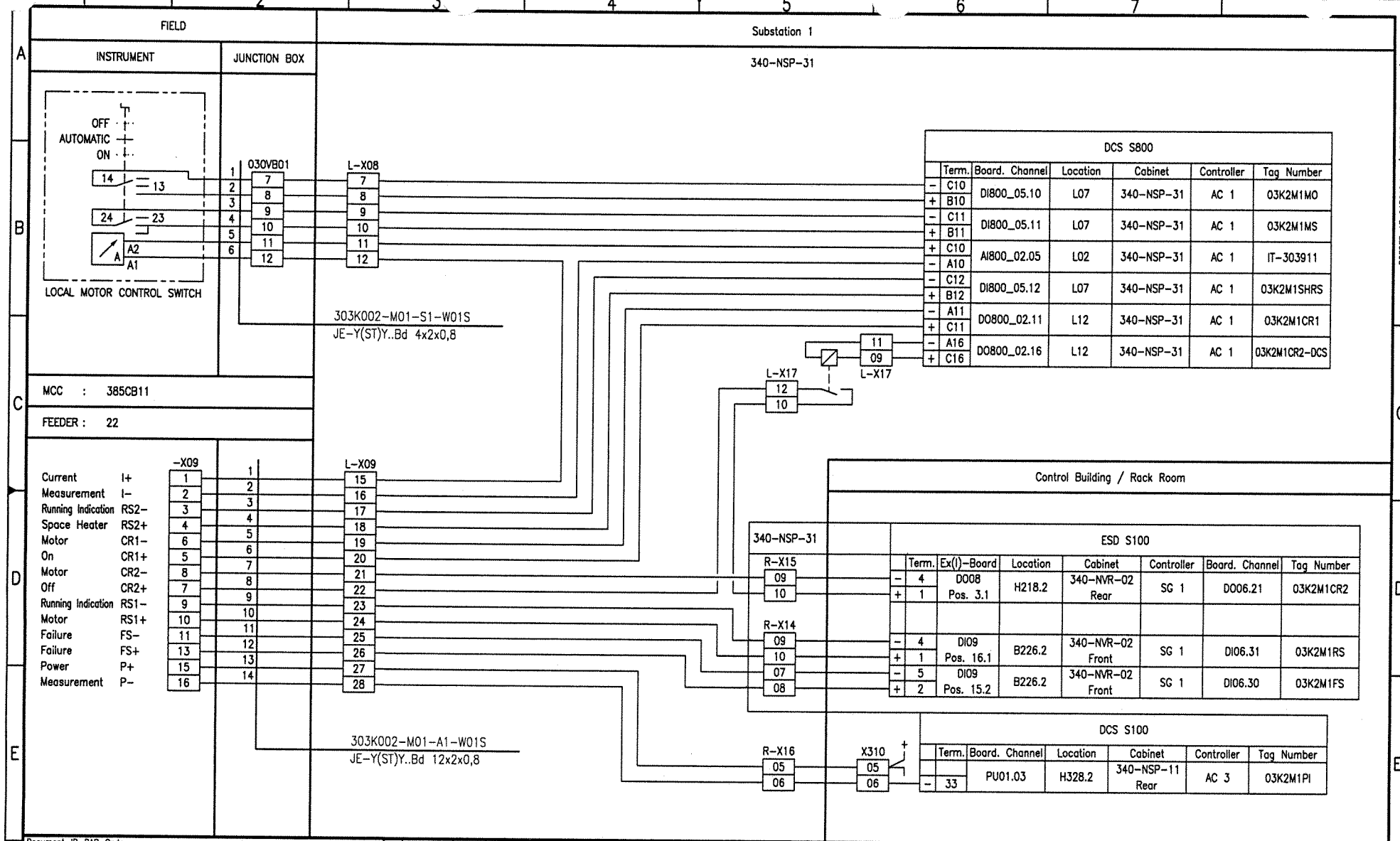
FIELD
INSTRUMENT
JUNCTION BOX
Substation 1
340-NSP-31
OFF
AUTOMATIC
ON
14
13
24
23
A2
A1
LOCAL MOTOR CONTROL SWITCH
030VB01
L-X08
303K002-M01-S1-W01S
JE-Y(ST)Y..Bd 4x2x0,8
MCC : 385CB11
FEEDER : 22
-X09
L-X09
Current I+
Measurement I-
Running Indication RS2-
Space Heater RS2+
Motor CR1-
On CR1+
Motor CR2-
Off CR2+
Running Indication RS1-
Motor RS1+
Failure FS-
Failure FS+
Power P+
Measurement P-
303K002-M01-A1-W01S
JE-Y(ST)Y..Bd 12x2x0,8
L-X17
DCS S800
Term. Board. Channel Location Cabinet Controller Tag Number
C10 DI800_05.10 L07 340-NSP-31 AC 1 03K2M1MO
B10
C11 DI800_05.11 L07 340-NSP-31 AC 1 03K2M1MS
B11
C10 AI800_02.05 L02 340-NSP-31 AC 1 IT-303911
A10
C12 DI800_05.12 L07 340-NSP-31 AC 1 03K2M1SHRS
B12
A11 DO800_02.11 L12 340-NSP-31 AC 1 03K2M1CR1
C11
A16 DO800_02.16 L12 340-NSP-31 AC 1 03K2M1CR2-DCS
C16
Control Building / Rack Room
340-NSP-31
R-X15
R-X14
R-X16
X310
ESD S100
Term. Ex(I)-Board Location Cabinet Controller Board. Channel Tag Number
4 1 DO08 Pos. 3.1 H218.2 340-NVR-02 Rear SG 1 DO06.21 03K2M1CR2
4 1 DI09 Pos. 16.1 B226.2 340-NVR-02 Front SG 1 DI06.31 03K2M1RS
5 2 DI09 Pos. 15.2 B226.2 340-NVR-02 Front SG 1 DI06.30 03K2M1FS
DCS S100
Term. Board. Channel Location Cabinet Controller Tag Number
33 PU01.03 H328.2 340-NSP-11 Rear AC 3 03K2M1PI
Document-ID-BAR-Code
01 20.09.06 Hie Hie 20.09.06 Heuer 20.09.06 Heuer AS BUILT
Rev. Date Name Drawn/Prepared Date Name Checked Date Name Approved Description Acc. Code
UAN 01-3040
Code Document ID UD-EL-G00-FS-0001 Part Rev. 01 Group
Uhde
All rights reserved © Uhde GmbH
Pro. Unit TON Cat. Code Acc. Code Status
Con. Unit Type of Document DH Order No. Scale Tot. Sheets
Date Name
Drawn 07.03.2005 Hielscher
Prepared 07.03.2005 Hohmann
Checked 07.03.2005 Heuer
Approved 07.03.2005 Heuer
AMMONIA / UREA PROJECT SUEZ II
Designation
Wiring diagram 303K002-M01
Store Location: Server \\p013040\013040-ADA
Store Location: Folder \Ei-ET\DH_el-wiring-diag\
Store Name 01-3040_303K002-M01_000_01.dwg
ISO A3
BORDER-A3_013040.dwg / A003A3_013040.dwg / 17.05.2004

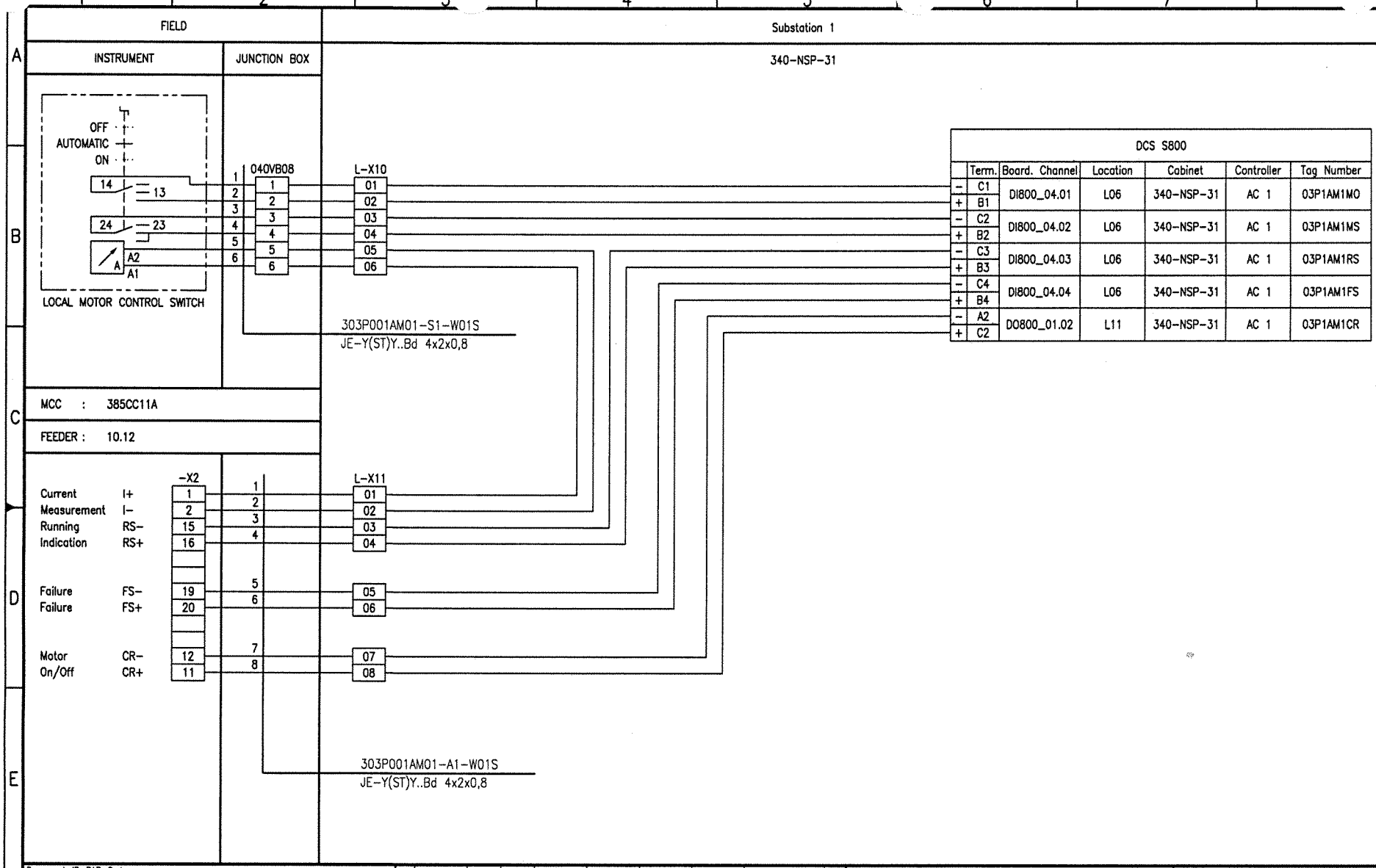

Document-ID-BAR-Code

Rev.	Date	Name (Drawn/Prepared)	Date	Name (Checked)	Date	Name (Approved)	Description	Acc. Code
01	20.09.06	Hie Hie	20.09.06	Heuer	20.09.06	Heuer	AS BUILT	

UAN	Document ID	Part	Rev.	Group
01-3040	UD-EL-G00-FS-0001		01	

Code

Uhde

All rights reserved © Uhde GmbH

Pro. Unit	TON	Cat. Code	Acc. Code	Status
Con. Unit	Type of Document: DH	Order No.	Scale	Tot. Sheets

	Date	Name
Drawn	07.03.2005	Hielscher
Prepared	07.03.2005	Hohmann
Checked	07.03.2005	Heuer
Approved	07.03.2005	Heuer

AMMONIA / UREA PROJECT SUEZ II

Designation
Wiring diagram
303P001AM01

Store Location: Server \\p013040\013040-ADA
Store Location: Folder \Ei-ET\DH_el-wiring-diag\
Store Name 01-3040_303P001AM01_000_01.dwg

ISO A3

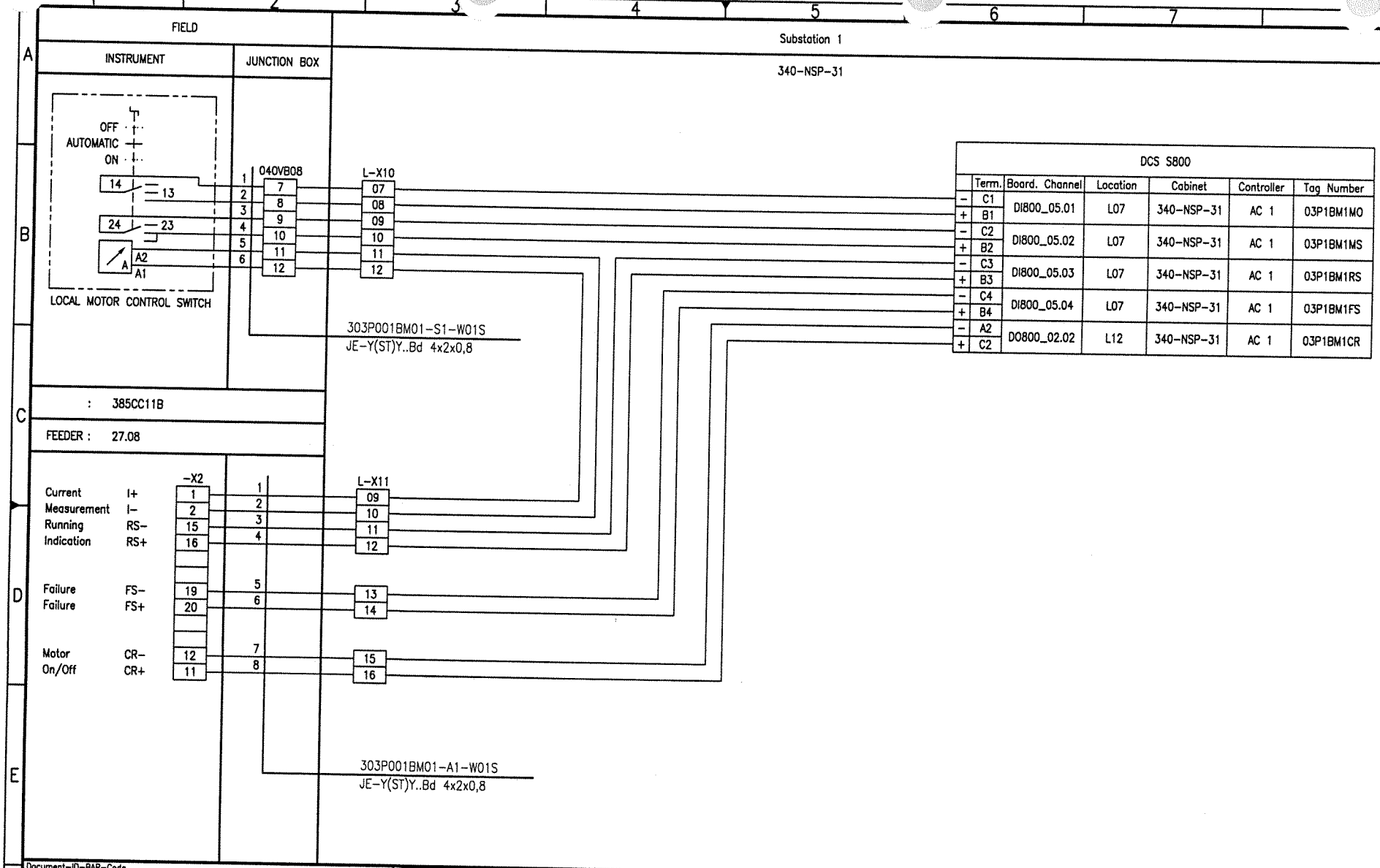

Document-ID-BAR-Code

Rev.	Date	Name (Drawn/Prepared)	Date	Name (Checked)	Date	Name (Approved)	Description	Acc. Code
01	20.09.06	Hie Hie	20.09.06	Heuer	20.09.06	Heuer	AS BUILT	

UAN	Document ID	Part	Rev.	Group
01-3040	UD-EL-G00-FS-0001		01	

Code

Uhde

All rights reserved © Uhde GmbH

Pro. Unit	TON	Cat. Code	Acc. Code	Status
Con. Unit	Type of Document: DH	Order No.	Scale	Tot. Sheets

	Date	Name
Drawn	07.03.2005	Hielscher
Prepared	07.03.2005	Hohmann
Checked	07.03.2005	Heuer
Approved	07.03.2005	Heuer

AMMONIA / UREA PROJECT SUEZ II

Designation
Wiring diagram
303P001BM01

Store Location: Server \\p013040\013040-ADA
Store Location: Folder \Ei-ET\DH_el-wiring-diag\
Store Name 01-3040_303P001BM01_000_01.dwg

ISO A3

CONTENTS

Loop Index (S 800 MOTORS) Processunit 305
CO2 Removal

Tag No.	Rev.	Crossreference: See	Remarks	File No.
305D001-M01	01			
305E003-M01	01			
305E003-M02	01			
305P001AM01	01			
305P001BM01	01			
305P002AM01	01			
305P002BM01	01			
305P003AM01	01			
305P003BM01	01			
305P004-M01	01			
305P005-M01	01			

I:\EI-ET\DH_el-wiring-diag\01-3040_Wiring_diagrams_coversheet_01.doc

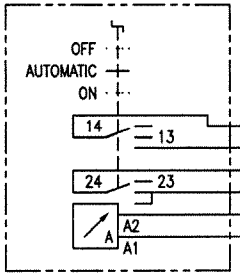

LOCAL MOTOR CONTROL SWITCH

FIELD | Substation 1

INSTRUMENT | JUNCTION BOX | 340-NSP-31

040VB05

L-X16

305D001-M01-S1-W01S
JE-Y(ST)Y..Bd 4x2x0,8

MCC : 385CC11A

FEEDER : 06.06A

-X2

R-X02

		-X2	R-X02
Current Measurement	I+	1	01
	I-	2	02
Running Indication	RS-	15	03
	RS+	16	04
Failure	FS-	19	05
Failure	FS+	20	06
Motor On/Off	CR-	12	07
	CR+	11	08

305D001-M01-A1-W01S
JE-Y(ST)Y..Bd 4x2x0,8

DCS S800

	Term.	Board. Channel	Location	Cabinet	Controller	Tag Number
-	C9	DI800_06.09	L08	340-NSP-31	AC 1	05D1M1MO
+	B9					
-	C10	DI800_06.10	L08	340-NSP-31	AC 1	05D1M1MS
+	B10					
-	C11	DI800_06.11	L08	340-NSP-31	AC 1	05D1M1RS
+	B11					
-	C12	DI800_06.12	L08	340-NSP-31	AC 1	05D1M1FS
+	B12					
-	A14	DO800_02.14	L12	340-NSP-31	AC 1	05D1M1CR
+	C14					

Document-ID-BAR-Code

Rev.	Date	Name (Drawn/Prepared)		Date	Name (Checked)	Date	Name (Approved)	Description	Acc. Code
01	20.09.06	Hie	Hie	20.09.06	Heuer	20.09.06	Heuer	AS BUILT	

UAN	Document ID	Part	Rev.	Group
01-3040	UD-EL-G00-FS-0001		01	

Code

Uhde

All rights reserved © Uhde GmbH

Pro. Unit	TON	Cat. Code	Acc. Code	Status

Con. Unit	Type of Document	Order No.	Scale	Tot. Sheets
	DH			

	Date	Name
Drawn	07.03.2005	Hielscher
Prepared	07.03.2005	Hohmann
Checked	07.03.2005	Heuer
Approved	07.03.2005	Heuer

AMMONIA / UREA PROJECT SUEZ II

Designation
Wiring diagram
305D001-M01

Store Location: Server
\\p013040\013040-ADA

Store Location: Folder
\EI-ET\DH_el-wiring-diag\

Store Name
01-3040_305D001-M01_000_01.dwg

ISO A3

BORDER-A3_013040.dwg / AGU3A3_013040.dwg / 17.05.2004

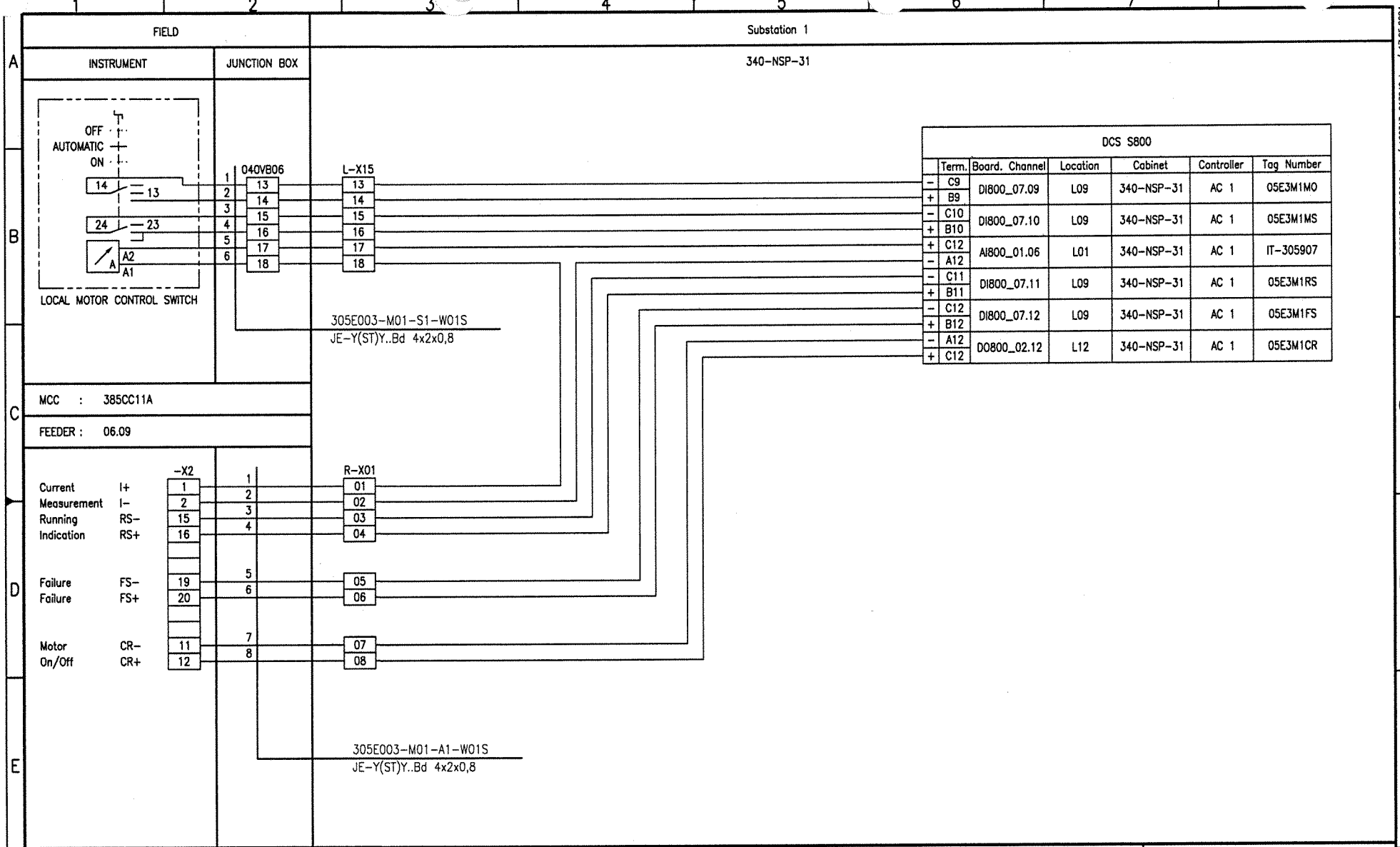
FIELD
Substation 1
INSTRUMENT
JUNCTION BOX
340-NSP-31
OFF
AUTOMATIC
ON
14
13
24
23
A2
A1
LOCAL MOTOR CONTROL SWITCH
040VB06
L-X15
305E003-M01-S1-W01S
JE-Y(ST)Y..Bd 4x2x0,8
MCC : 385CC11A
FEEDER : 06.09
-X2
R-X01
Current Measurement I+ I-
Running Indication RS- RS+
Failure FS-
Failure FS+
Motor On/Off CR- CR+
305E003-M01-A1-W01S
JE-Y(ST)Y..Bd 4x2x0,8
DCS S800
Term. Board. Channel Location Cabinet Controller Tag Number
C9 DI800_07.09 L09 340-NSP-31 AC 1 05E3M1MO
B9
C10 DI800_07.10 L09 340-NSP-31 AC 1 05E3M1MS
B10
C12 AI800_01.06 L01 340-NSP-31 AC 1 IT-305907
A12
C11 DI800_07.11 L09 340-NSP-31 AC 1 05E3M1RS
B11
C12 DI800_07.12 L09 340-NSP-31 AC 1 05E3M1FS
B12
A12 DO800_02.12 L12 340-NSP-31 AC 1 05E3M1CR
C12
Document-ID-BAR-Code
01 20.09.06 Hie Hie 20.09.06 Heuer 20.09.06 Heuer AS BUILT
Rev. Date Name Date Name Date Name Description Acc. Code
Drawn/Prepared Checked Approved
UAN 01-3040
Code Document ID UD-EL-G00-FS-0001 Part Rev. 01 Group
Uhde
All rights reserved © Uhde GmbH
Pro. Unit TON Cat. Code Acc. Code Status
Con. Unit Type of Document DH Order No. Scale Tot. Sheets
Drawn 07.03.2005 Hielscher
Prepared 07.03.2005 Hohmann
Checked 07.03.2005 Heuer
Approved 07.03.2005 Heuer
AMMONIA / UREA PROJECT SUEZ II
Designation
Wiring diagram 305E003-M01
Store Location: Server \\p013040\013040-ADA
Store Location: Folder \EI-ET\DH_el-wiring-diag\
Store Name 01-3040_305E003-M01_000_01.dwg
ISO A3
BORDER-A3_013040.dwg / A003A3_013040.dwg / 17.05.2004

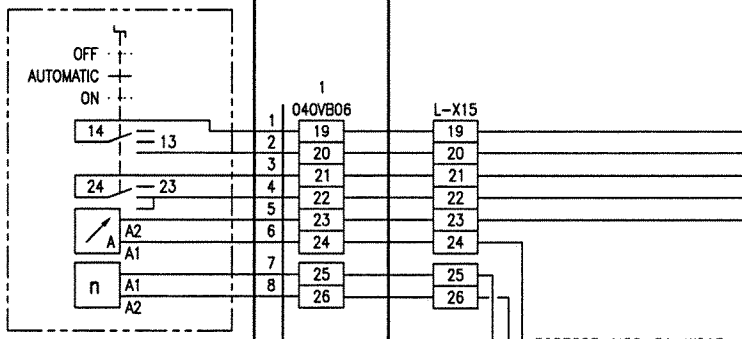

FIELD

INSTRUMENT

JUNCTION BOX

Substation 1

340-NSP-31

1
040VB06

L-X15

305E003-M02-S1-W01S
JE-Y(ST)Y..Bd 4x2x0,8

DCS S800						
	Term.	Board. Channel	Location	Cabinet	Controller	Tag Number
–	C1	DI800_08.01	L10	340-NSP-31	AC 1	05E3M2MO
+	B1					
–	C2	DI800_08.02	L10	340-NSP-31	AC 1	05E3M2MS
+	B2					
+	C14	AI800_02.07	L02	340-NSP-31	AC 1	IT-305906
–	A14					
–	C3	DI800_08.03	L10	340-NSP-31	AC 1	05E3M2RS
+	B3					
–	C4	DI800_08.04	L10	340-NSP-31	AC 1	05E3M2FS
+	B4					
–	A14	DO800_01.14	L11	340-NSP-31	AC 1	05E3M2CR
+	C14					

MCC : 385RS11-1

FEEDER : 305E003-M02-U

-X2

R-X01

Current Measurement	I+	62	1
	I–	63	2
Running Indication	RS–	32	3
	RS+	33	4
Failure	FS–	38	5
Failure	FS+	36	6
Motor On/Off	CR– K33	A2	7
	CR+ K33	A1	8
	F+	51	9
	F–	50	10
	N+	60	11
	N–	61	12

R-X03

340-NSP-32

R-X15 R-X16

305E003-M02-A1-W01S
JE-Y(ST)Y..Bd 12x2x0,8

Control Building / Rack Room

340-NSP-06

-X340-NSP-32

DCS S100						
	Term.	Ex(I)-Board	Location	Cabinet	Board. Channel	Tag Number
+	2	AX17(AO) Pos. 5.2	H220.2A	340-NSP-02 Rear	AX15.10	TIC-305006-0
–	5					

Document-ID-BAR-Code

Rev.	Date	Name (Drawn/Prepared)	Date	Name (Checked)	Date	Name (Approved)	Description	Acc. Code
01	20.09.06	Hie Hie	20.09.06	Heuer	20.09.06	Heuer	AS BUILT	

UAN	Document ID	Part	Rev.	Group
01-3040	UD-EL-G00-FS-0001		01	

Code

Uhde

All rights reserved © Uhde GmbH

Pro. Unit	TON	Cat. Code	Acc. Code	Status
Con. Unit	Type of Document: DH	Order No.	Scale	Tot. Sheets

	Date	Name
Drawn	07.03.2005	Hielscher
Prepared	07.03.2005	Hohmann
Checked	07.03.2005	Heuer
Approved	07.03.2005	Heuer

AMMONIA / UREA PROJECT SUEZ II

Designation
Wiring diagram
305E003-M02

Store Location: Server
\\p013040\013040-ADA

Store Location: Folder
\Ei-ET\DH_el-wiring-diag\

Store Name
01-3040_305E003-M02_000_01.dwg

BORDER-A3_013040.dwg / A6D3A3_013040.dwg / 17.05.2004

ISO A3

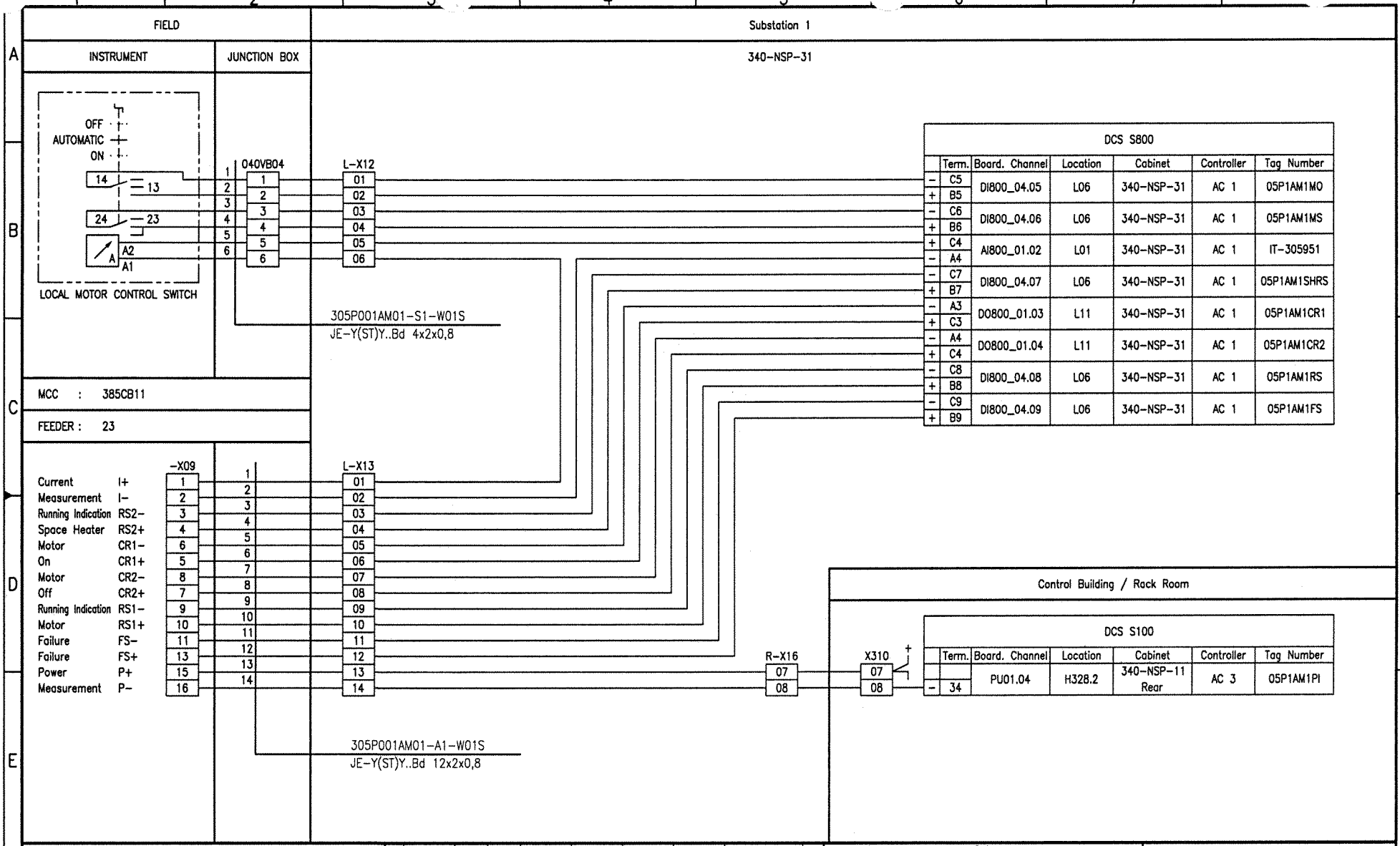
FIELD
Substation 1
INSTRUMENT
JUNCTION BOX
340-NSP-31
OFF
AUTOMATIC
ON
14
13
24
23
A2
A1
LOCAL MOTOR CONTROL SWITCH
040VB04
L-X12
305P001AM01-S1-W01S
JE-Y(ST)Y..Bd 4x2x0,8
MCC : 385CB11
FEEDER : 23
-X09
Current I+
Measurement I-
Running Indication RS2-
Space Heater RS2+
Motor CR1-
On CR1+
Motor CR2-
Off CR2+
Running Indication RS1-
Motor RS1+
Failure FS-
Failure FS+
Power P+
Measurement P-
L-X13
305P001AM01-A1-W01S
JE-Y(ST)Y..Bd 12x2x0,8
R-X16
X310
Control Building / Rack Room
DCS S800
Term. Board. Channel Location Cabinet Controller Tag Number
C5 B5 DI800_04.05 L06 340-NSP-31 AC 1 05P1AM1MO
C6 B6 DI800_04.06 L06 340-NSP-31 AC 1 05P1AM1MS
C4 A4 AI800_01.02 L01 340-NSP-31 AC 1 IT-305951
C7 B7 DI800_04.07 L06 340-NSP-31 AC 1 05P1AM1SHRS
A3 C3 DO800_01.03 L11 340-NSP-31 AC 1 05P1AM1CR1
A4 C4 DO800_01.04 L11 340-NSP-31 AC 1 05P1AM1CR2
C8 B8 DI800_04.08 L06 340-NSP-31 AC 1 05P1AM1RS
C9 B9 DI800_04.09 L06 340-NSP-31 AC 1 05P1AM1FS
DCS S100
Term. Board. Channel Location Cabinet Controller Tag Number
34 PU01.04 H328.2 340-NSP-11 Rear AC 3 05P1AM1PI
Document-ID-BAR-Code
01 20.09.06 Hie Hie 20.09.06 Heuer 20.09.06 Heuer AS BUILT
Rev. Date Name Date Name Date Name Description Acc. Code
Drawn/Prepared Checked Approved
UAN 01-3040
Document ID UD-EL-G00-FS-0001
Part Rev. 01 Group
Uhde
All rights reserved © Uhde GmbH
Pro. Unit TON Cat. Code Acc. Code Status
Con. Unit Type of Document DH Order No. Scale Tot. Sheets
Drawn 07.03.2005 Hielscher
Prepared 07.03.2005 Hohmann
Checked 07.03.2005 Heuer
Approved 07.03.2005 Heuer
AMMONIA / UREA PROJECT SUEZ II
Designation
Wiring diagram 305P001AM01
Store Location: Server \\p013040\013040-ADA
Store Location: Folder \Ei-ET\DH_el-wiring-diag\
Store Name 01-3040_305P001AM01_000_01.dwg
ISO A3
BORDER-A3_013040.dwg / AG3A3_013040.dwg / 17.05.2004

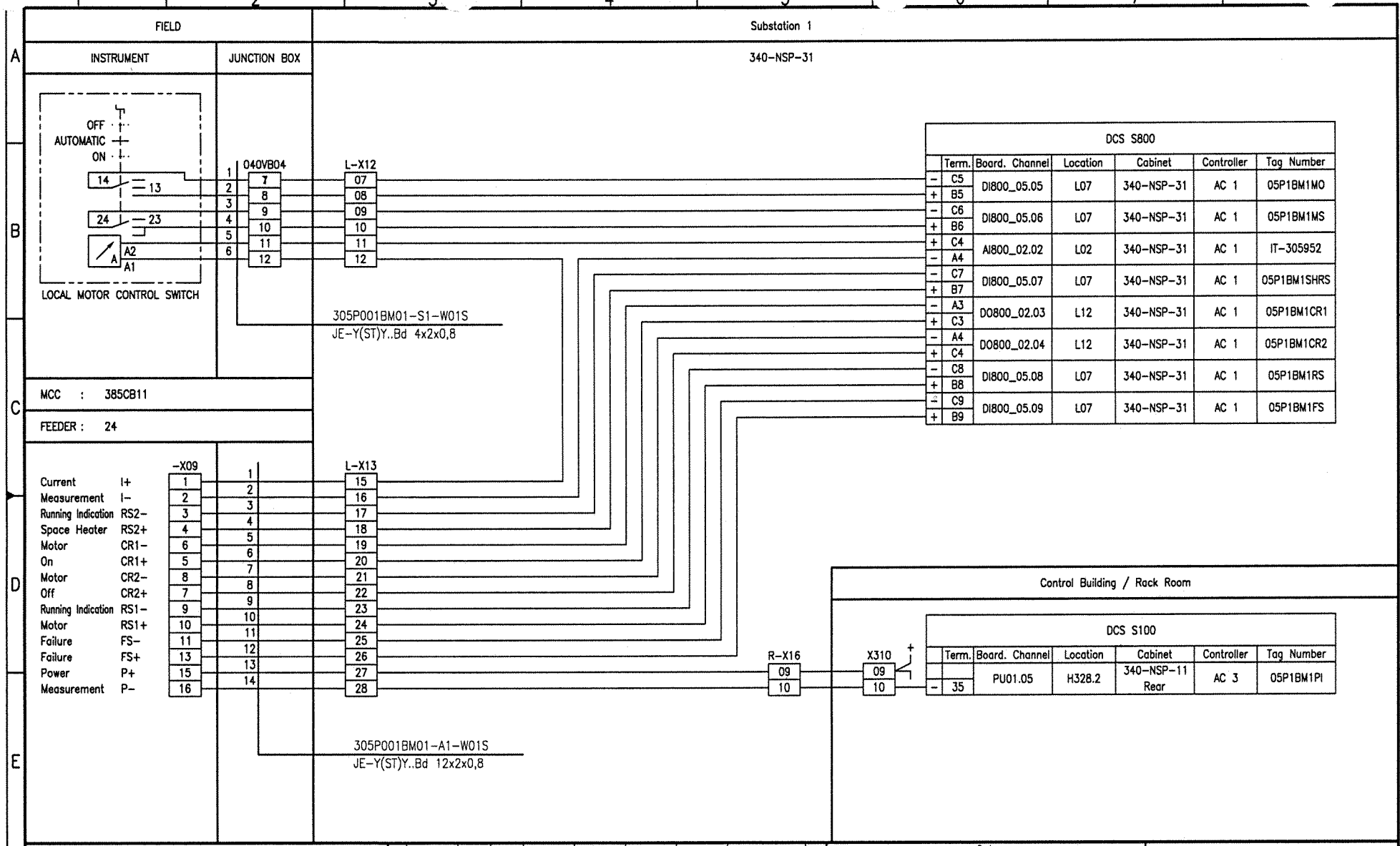
FIELD
Substation 1
INSTRUMENT
JUNCTION BOX
340-NSP-31
OFF
AUTOMATIC
ON
14
13
24
23
A2
A1
LOCAL MOTOR CONTROL SWITCH
040VB04
L-X12
305P001BM01-S1-W01S
JE-Y(ST)Y..Bd 4x2x0,8
MCC : 385CB11
FEEDER : 24
-X09
L-X13
Current I+
Measurement I-
Running Indication RS2-
Space Heater RS2+
Motor CR1-
On CR1+
Motor CR2-
Off CR2+
Running Indication RS1-
Motor RS1+
Failure FS-
Failure FS+
Power P+
Measurement P-
305P001BM01-A1-W01S
JE-Y(ST)Y..Bd 12x2x0,8
DCS S800
Term. Board. Channel Location Cabinet Controller Tag Number
C5 B5 DI800_05.05 L07 340-NSP-31 AC 1 05P1BM1MO
C6 B6 DI800_05.06 L07 340-NSP-31 AC 1 05P1BM1MS
C4 A4 AI800_02.02 L02 340-NSP-31 AC 1 IT-305952
C7 B7 DI800_05.07 L07 340-NSP-31 AC 1 05P1BM1SHRS
A3 C3 DO800_02.03 L12 340-NSP-31 AC 1 05P1BM1CR1
A4 C4 DO800_02.04 L12 340-NSP-31 AC 1 05P1BM1CR2
C8 B8 DI800_05.08 L07 340-NSP-31 AC 1 05P1BM1RS
C9 B9 DI800_05.09 L07 340-NSP-31 AC 1 05P1BM1FS
Control Building / Rack Room
R-X16
X310
DCS S100
Term. Board. Channel Location Cabinet Controller Tag Number
35 PU01.05 H328.2 340-NSP-11 Rear AC 3 05P1BM1PI
Document-ID-BAR-Code
01 20.09.06 Hie Hie 20.09.06 Heuer 20.09.06 Heuer AS BUILT
Rev. Date Name Drawn/Prepared Date Name Checked Date Name Approved Description Acc. Code
UAN 01-3040
Code Document ID UD-EL-G00-FS-0001 Part Rev. 01 Group
Uhde
All rights reserved © Uhde GmbH
Pro. Unit TON Cat. Code Acc. Code Status
Con. Unit Type of Document DH Order No. Scale Tot. Sheets
Drawn 07.03.2005 Hielscher
Prepared 07.03.2005 Hohmann
Checked 07.03.2005 Heuer
Approved 07.03.2005 Heuer
AMMONIA / UREA PROJECT SUEZ II
Designation
Wiring diagram 305P001BM01
Store Location: Server \\p013040\013040-ADA
Store Location: Folder \EI-ET\DH_el-wiring-diag\
Store Name 01-3040_305P001BM01_000_01.dwg
ISO A3
BORDER-A3_013040.dwg / A0/3A3_013040.dwg / 17.05.2004

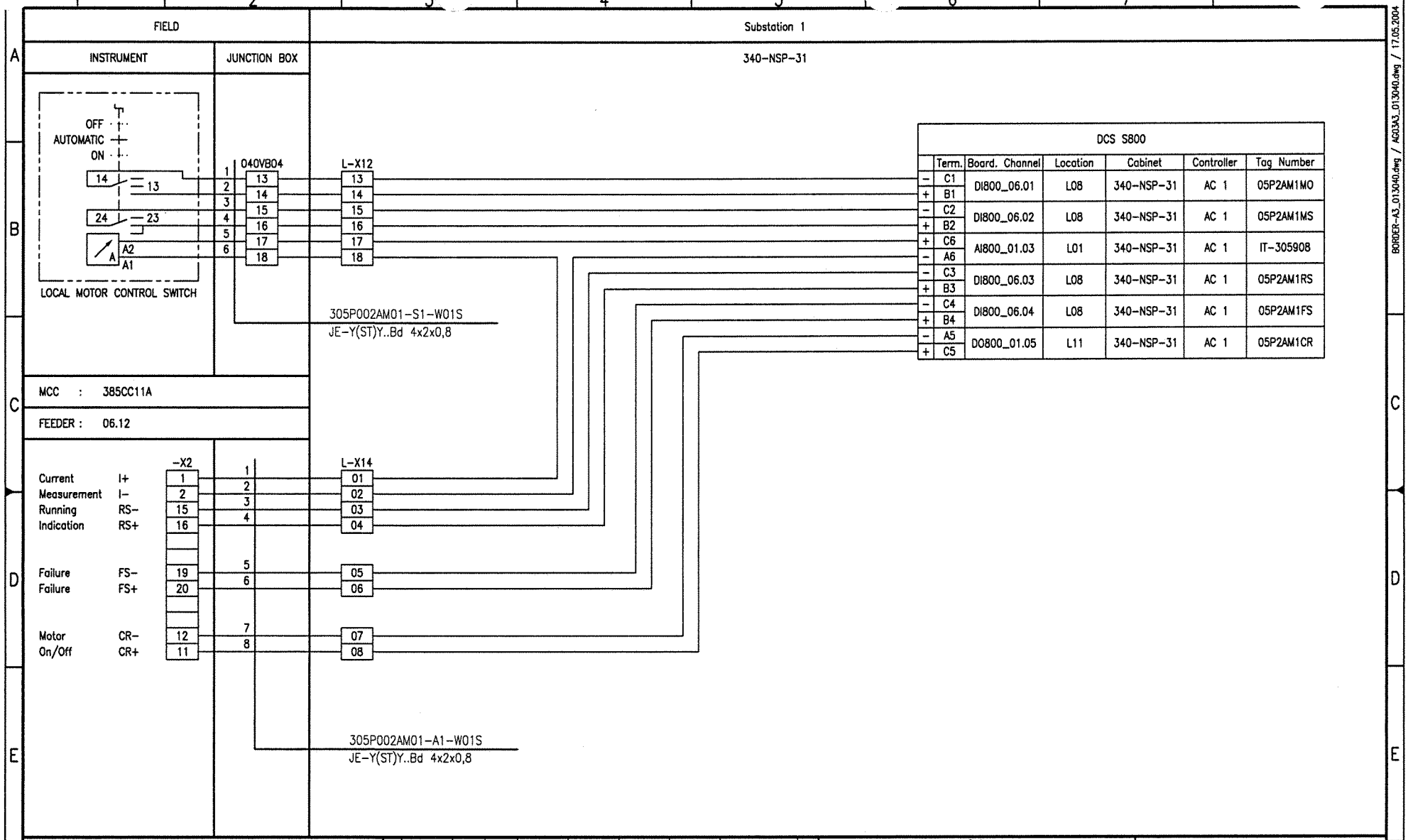

Document-ID-BAR-Code

Rev.	Date	Name (Drawn/Prepared)	Date	Name (Checked)	Date	Name (Approved)	Description	Acc. Code
01	20.09.06	Hie Hie	20.09.06	Heuer	20.09.06	Heuer	AS BUILT	

UAN	Document ID	Part	Rev.	Group
01-3040	UD-EL-G00-FS-0001		01	

Code

Uhde

All rights reserved © Uhde GmbH

Pro. Unit	TON	Cat. Code	Acc. Code	Status
Con. Unit	Type of Document: DH	Order No.	Scale	Tot. Sheets

	Date	Name
Drawn	07.03.2005	Hielscher
Prepared	07.03.2005	Hohmann
Checked	07.03.2005	Heuer
Approved	07.03.2005	Heuer

AMMONIA / UREA PROJECT SUEZ II

Designation
Wiring diagram
305P002AM01

Store Location: Server \\p013040\013040-ADA
Store Location: Folder \Ei-ET\DH_el-wiring-diag\
Store Name 01-3040_305P002AM01_000_01.dwg

ISO A3

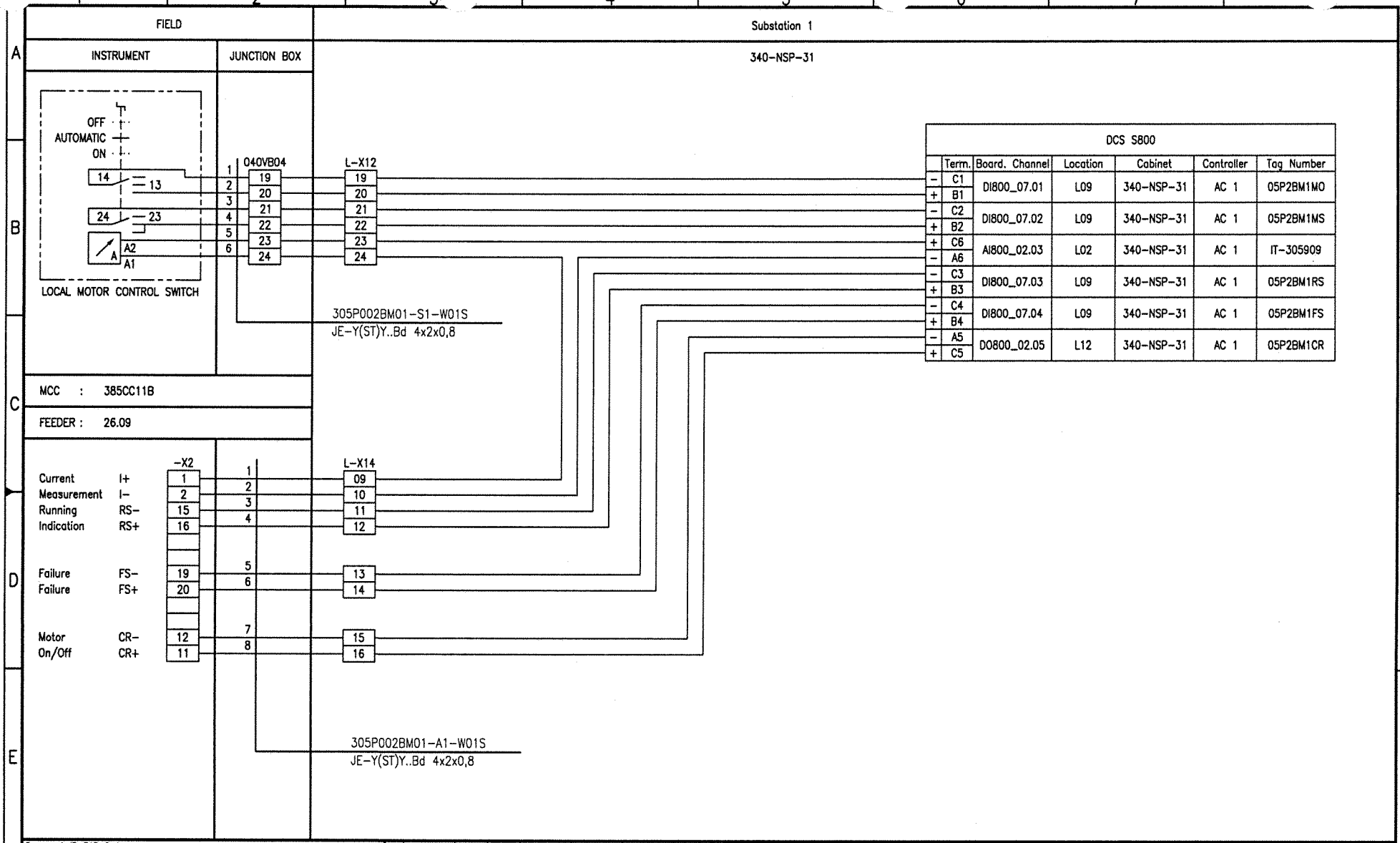

Document-ID-BAR-Code

Rev.	Date	Name (Drawn/Prepared)	Date	Name (Checked)	Date	Name (Approved)	Description	Acc. Code
01	20.09.06	Hie Hie	20.09.06	Heuer	20.09.06	Heuer	AS BUILT	

Pro. Unit	TON	Cat. Code	Acc. Code	Status
Con. Unit	Type of Document: DH	Order No.	Scale	Tot. Sheets

	Date	Name
Drawn	07.03.2005	Hielscher
Prepared	07.03.2005	Hohmann
Checked	07.03.2005	Heuer
Approved	07.03.2005	Heuer

Code: UAN 01-3040 | Document ID UD-EL-G00-FS-0001 | Part | Rev. 01 | Group

Uhde

All rights reserved © Uhde GmbH

AMMONIA / UREA PROJECT SUEZ II

Designation: Wiring diagram 305P002BM01

Store Location: Server \\p013040\013040-ADA
Store Location: Folder \EI-ET\DH_el-wiring-diag\
Store Name 01-3040_305P002BM01_000_01.dwg

ISO A3

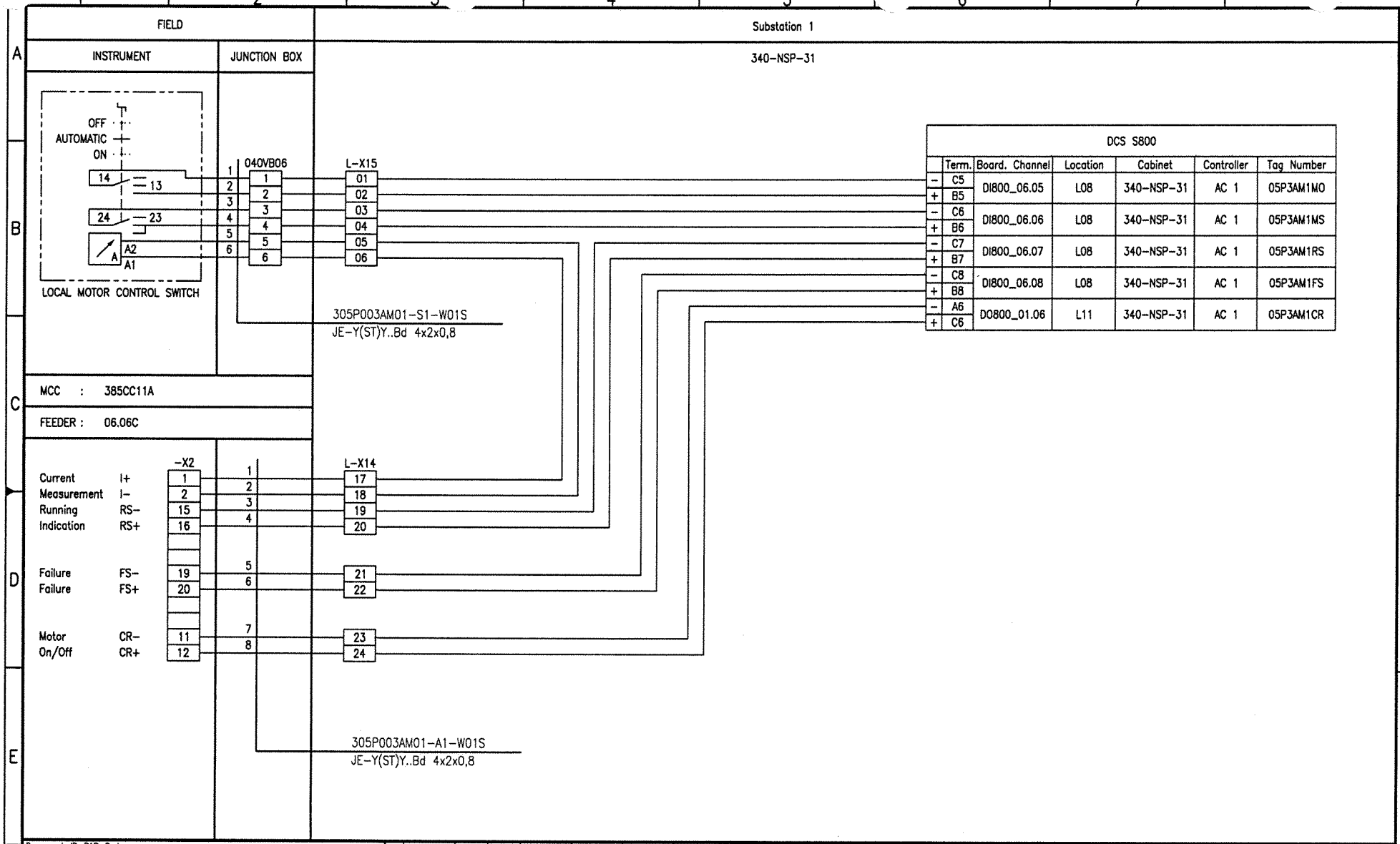

Document-ID-BAR-Code

Rev.	Date	Name (Drawn/Prepared)	Date	Name (Checked)	Date	Name (Approved)	Description	Acc. Code
01	20.09.06	Hie Hie	20.09.06	Heuer	20.09.06	Heuer	AS BUILT	

Pro. Unit	TON	Cat. Code	Acc. Code	Status

Con. Unit	Type of Document	Order No.	Scale	Tot. Sheets
	DH			

Store Location: Server	Store Location: Folder	Store Name
\\p013040\013040-ADA	\EI-ET\DH_el-wiring-diag\	01-3040_305P003AM01_000_01.dwg

Code	UAN	Document ID	Part	Rev.	Group
	01-3040	UD-EL-G00-FS-0001		01	

	Date	Name
Drawn	07.03.2005	Hielscher
Prepared	07.03.2005	Hohmann
Checked	07.03.2005	Heuer
Approved	07.03.2005	Heuer

AMMONIA / UREA PROJECT SUEZ II

Uhde

All rights reserved © Uhde GmbH

Designation
Wiring diagram
305P003AM01

ISO A3

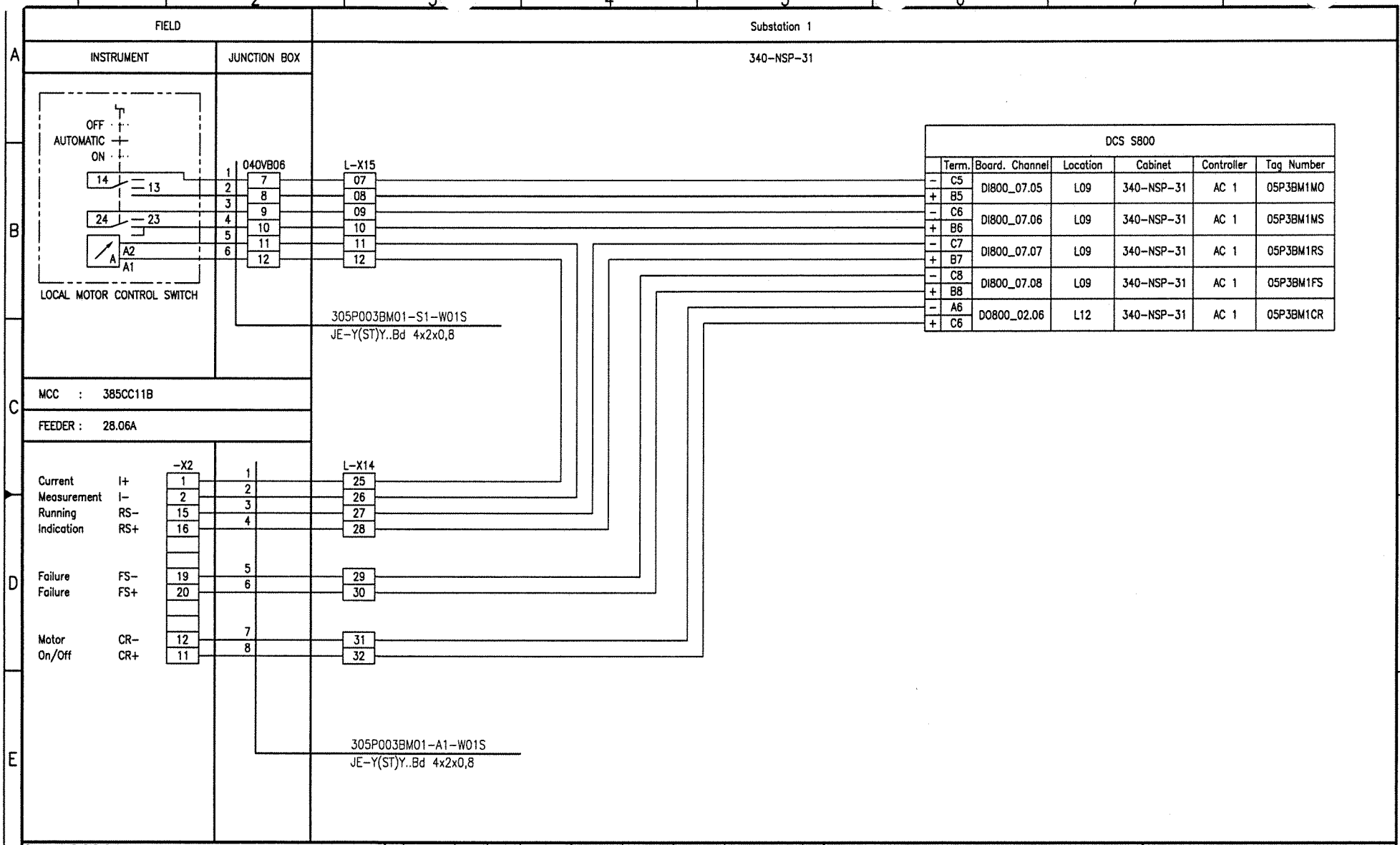

Document-ID-BAR-Code

Rev.	Date	Name	Date	Name	Date	Name	Description	Acc. Code
01	20.09.06	Hie Hie	20.09.06	Heuer	20.09.06	Heuer	AS BUILT	
	Drawn/Prepared		Checked		Approved			

UAN	Document ID	Part	Rev.	Group
01-3040	UD-EL-G00-FS-0001		01	

Code

Uhde

All rights reserved © Uhde GmbH

Pro. Unit	TON	Cat. Code	Acc. Code	Status
Con. Unit	Type of Document: DH	Order No.	Scale	Tot. Sheets

	Date	Name
Drawn	07.03.2005	Hielscher
Prepared	07.03.2005	Hohmann
Checked	07.03.2005	Heuer
Approved	07.03.2005	Heuer

AMMONIA / UREA PROJECT SUEZ II

Designation
Wiring diagram
305P003BM01

Store Location: Server \\p013040\013040-ADA
Store Location: Folder \EI-ET\DH_el-wiring-diag\
Store Name 01-3040_305P003BM01_000_01.dwg

ISO A3

BORDER-A3_013040.dwg / AC03A3_013040.dwg / 17.05.2004

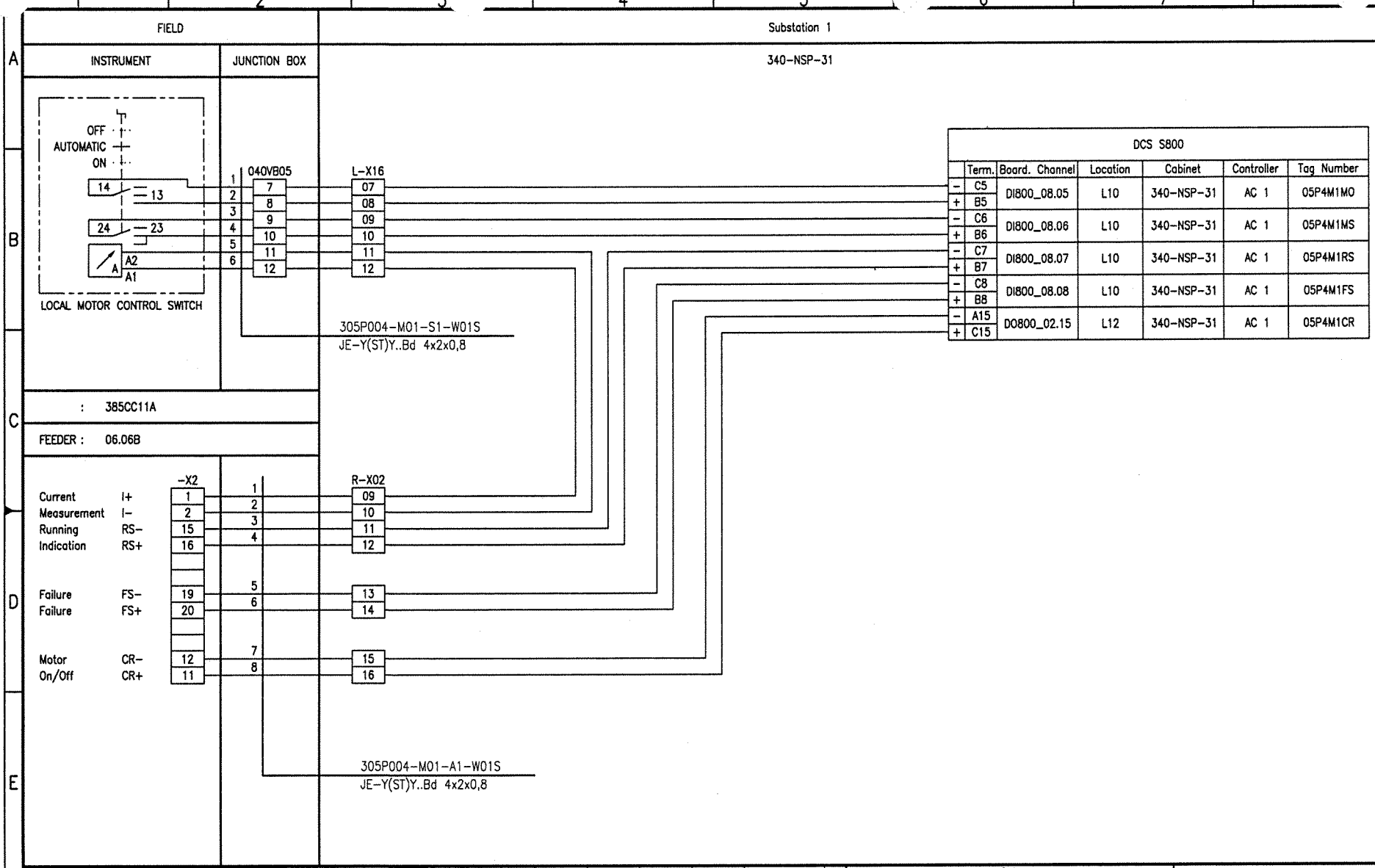

Document-ID-BAR-Code

Rev.	Date	Name (Drawn/Prepared)	Date	Name (Checked)	Date	Name (Approved)	Description	Acc. Code
01	20.09.06	Hie Hie	20.09.06	Heuer	20.09.06	Heuer	AS BUILT	

Pro. Unit	TON	Cat. Code	Acc. Code	Status
Con. Unit	Type of Document: DH	Order No.	Scale	Tot. Sheets

	Date	Name
Drawn	07.03.2005	Hielscher
Prepared	07.03.2005	Hohmann
Checked	07.03.2005	Heuer
Approved	07.03.2005	Heuer

Code: UAN 01-3040 | Document ID UD-EL-G00-FS-0001 | Part | Rev. 01 | Group

Uhde

All rights reserved © Uhde GmbH

AMMONIA / UREA PROJECT SUEZ II

Designation: Wiring diagram 305P004-M01

Store Location: Server \\p013040\013040-ADA
Store Location: Folder \EI-ET\DH_el-wiring-diag\
Store Name 01-3040_305P004-M01_000_01.dwg

BORDER-A3_013040.dwg / AG03A3_013040.dwg / 17.05.2004

ISO A3

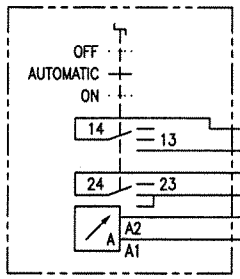

LOCAL MOTOR CONTROL SWITCH

FIELD | Substation 1

INSTRUMENT | JUNCTION BOX | 340-NSP-31

040VB05

1	13
2	14
3	15
4	16
5	17
6	18

L-X16

13	
14	
15	
16	
17	
18	

305P005-M01-S1-W01S
JE-Y(ST)Y..Bd 4x2x0,8

MCC : 385CC11A

FEEDER : 10.14

-X2

Current Measurement	I+	1	1
	I-	2	2
Running Indication	RS-	15	3
	RS+	16	4
Failure	FS-	19	5
Failure	FS+	20	6
Motor On/Off	CR-	12	7
	CR+	11	8

R-X02

17	
18	
19	
20	
21	
22	
23	
24	

305P005-M01-A1-W01S
JE-Y(ST)Y..Bd 4x2x0,8

DCS S800

	Term.	Board. Channel	Location	Cabinet	Controller	Tag Number
-	C9	DI800_08.09	L10	340-NSP-31	AC 1	05P5M1MO
+	B9					
-	C10	DI800_08.10	L10	340-NSP-31	AC 1	05P5M1MS
+	B10					
-	C11	DI800_08.11	L10	340-NSP-31	AC 1	05P5M1RS
+	B11					
-	C12	DI800_08.12	L10	340-NSP-31	AC 1	05P5M1FS
+	B12					
-	A12	DO800_01.12	L11	340-NSP-31	AC 1	05P5M1CR
+	C12					

Document-ID-BAR-Code

Rev.	Date	Name (Drawn/Prepared)	Date	Name (Checked)	Date	Name (Approved)	Description	Acc. Code
01	20.09.06	Hie Hie	20.09.06	Heuer	20.09.06	Heuer	AS BUILT	

UAN	Document ID	Part	Rev.	Group
01-3040	UD-EL-G00-FS-0001		01	

Code

Uhde

All rights reserved © Uhde GmbH

Pro. Unit	TON	Cat. Code	Acc. Code	Status
Con. Unit	Type of Document: DH	Order No.	Scale	Tot. Sheets

	Date	Name
Drawn	07.03.2005	Hielscher
Prepared	07.03.2005	Hohmann
Checked	07.03.2005	Heuer
Approved	07.03.2005	Heuer

AMMONIA / UREA PROJECT SUEZ II

Designation
Wiring diagram
305P005-M01

Store Location: Server \\p013040\013040-ADA
Store Location: Folder \Ei-ET\DH_el-wiring-diag\
Store Name 01-3040_305P005-M01_000_01.dwg

ISO A3

BORDER-A3_013040.dwg / AG3A3_013040.dwg / 17.05.2004

CONTENTS

Loop Index (S 800 MOTORS) Processunit 307
Natural Gas Deslphurisation

Tag No.	Rev.	Crossreference: See	Remarks	File No.
307MT01-M01	01			
307P001AM01	01			
307P001BM01	01			
307U001-EH1	01			
307U001-EH2	01			
307U001-EH3	01			
307U001-M01	01			
307U001-M02	01			
307U001-M03	01			
307U001-M04	01			
307U001-M05	01			
307U004-EH1	01			
307U004-M01	01			

I:\D-ETVDH_el-wiring-diag\01-3040_Wiring_diagrams_coversheet_01.doc

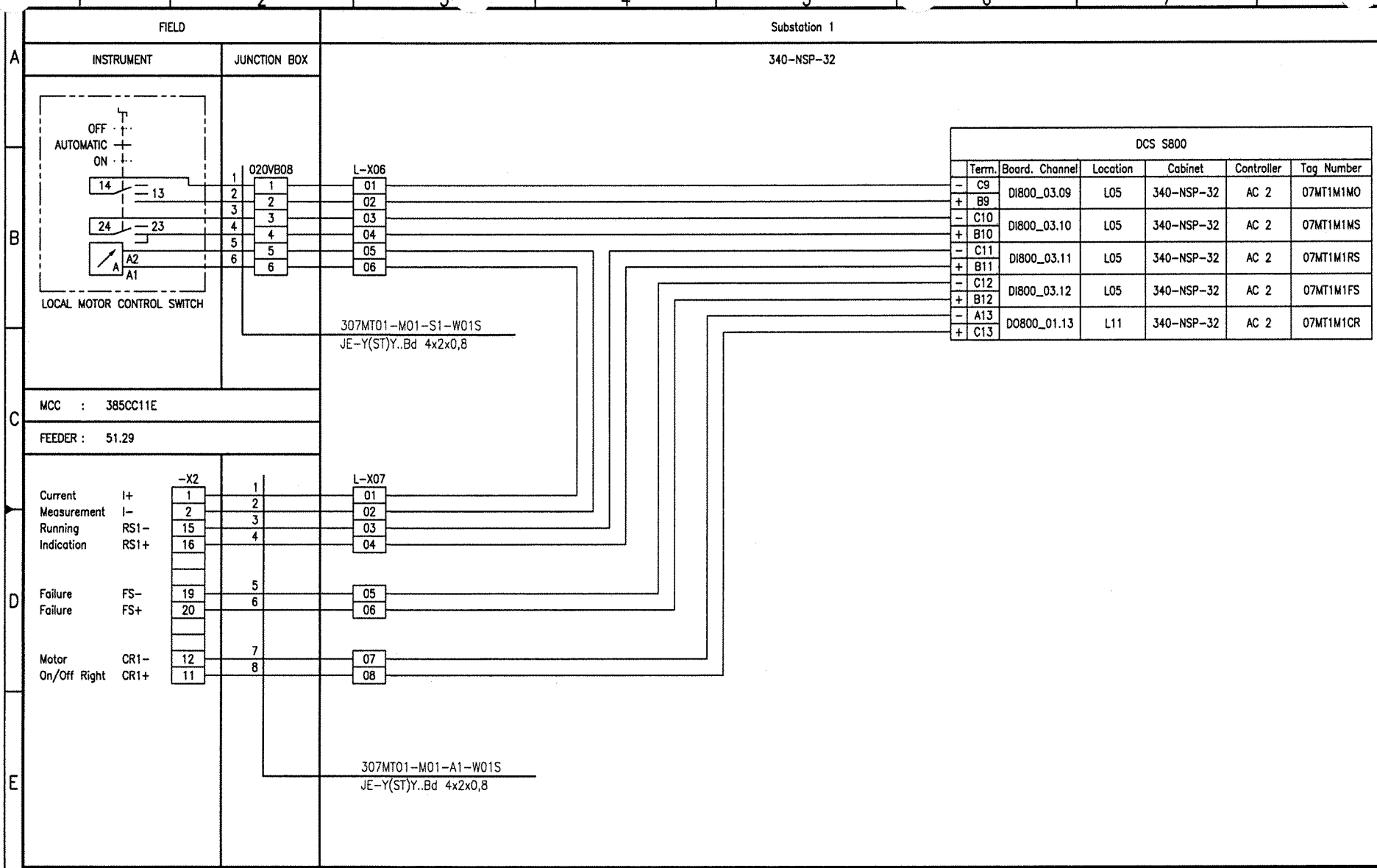

Document-ID-BAR-Code

Rev.	Date	Name (Drawn/Prepared)	Date	Name (Checked)	Date	Name (Approved)	Description	Acc. Code
01	20.09.06	Hie Hie	20.09.06	Heuer	20.09.06	Heuer	AS BUILT	

UAN	Document ID	Part	Rev.	Group
01-3040	UD-EL-G00-FS-0001		01	

Code

Uhde

All rights reserved © Uhde GmbH

Pro. Unit	TON	Cat. Code	Acc. Code	Status
Con. Unit	Type of Document: DH	Order No.	Scale	Tot. Sheets

	Date	Name
Drawn	07.03.2005	Hielscher
Prepared	07.03.2005	Hohmann
Checked	07.03.2005	Heuer
Approved	07.03.2005	Heuer

AMMONIA / UREA PROJECT SUEZ II

Designation
Wiring diagram
307MT-M01

Store Location: Server \\p013040\013040-ADA
Store Location: Folder \EI-ET\DH_el-wiring-diag\
Store Name 01-3040_307MT01-M01_000_01.dwg

ISO A3

BORDER-A3_013040.dwg / A903A3_013040.dwg / 17.05.2004

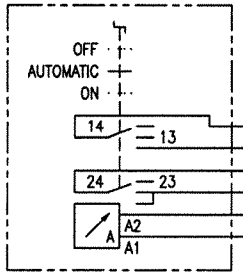

LOCAL MOTOR CONTROL SWITCH

FIELD | Substation 1

INSTRUMENT | JUNCTION BOX | 340-NSP-32

020VB06

L-X01

307P001AM01-S1-W01S
JE-Y(ST)Y..Bd 4x2x0,8

DCS S800						
	Term.	Board. Channel	Location	Cabinet	Controller	Tag Number
-	C1	DI800_01.01	L03	340-NSP-32	AC 2	07P1AM1MO
+	B1					
-	C2	DI800_01.02	L03	340-NSP-32	AC 2	07P1AM1MS
+	B2					
+	C2	AI800_01.01	L01	340-NSP-32	AC 2	IT-307951
-	A2					
-	C3	DI800_01.03	L03	340-NSP-32	AC 2	07P1AM1RS
+	B3					
-	C4	DI800_01.04	L03	340-NSP-32	AC 2	07P1AM1FS
+	B4					
-	A1	DO800_01.01	L11	340-NSP-32	AC 2	07P1AM1CR
+	C1					

MCC : 385CC11A

FEEDER : 06.15

-X2

L-X02

		-X2		L-X02
Current Measurement	I+	1	1	01
	I-	2	2	02
Running Indication	RS-	15	3	03
	RS+	16	4	04
Failure	FS-	19	5	05
Failure	FS+	20	6	06
Motor On/Off	CR-	12	7	07
	CR+	11	8	08

307P001AM01-A1-W01S
JE-Y(ST)Y..Bd 4x2x0,8

Document-ID-BAR-Code

Rev.	Date	Name	Date	Name	Date	Name	Description	Acc. Code
01	20.09.06	Hie Hie	20.09.06	Heuer	20.09.06	Heuer	AS BUILT	
	Drawn/Prepared		Checked		Approved			

UAN	Code: Document ID	Part	Rev.	Group
01-3040	UD-EL-G00-FS-0001		01	

Uhde

All rights reserved © Uhde GmbH

Pro. Unit	TON	Cat. Code	Acc. Code	Status
Con. Unit	Type of Document: DH	Order No.	Scale	Tot. Sheets

	Date	Name
Drawn	07.03.2005	Hielscher
Prepared	07.03.2005	Hohmann
Checked	07.03.2005	Heuer
Approved	07.03.2005	Heuer

AMMONIA / UREA
PROJECT
SUEZ II

Designation
Wiring diagram
307P001AM01

Store Location: Server
\\p013040\013040-ADA

Store Location: Folder
\EI-ET\DH_el-wiring-diag\

Store Name
01-3040_307P001AM01_000_01.dwg

ISO A3

BORDER-A3_013040.dwg / A03A3_013040.dwg / 17.05.2004

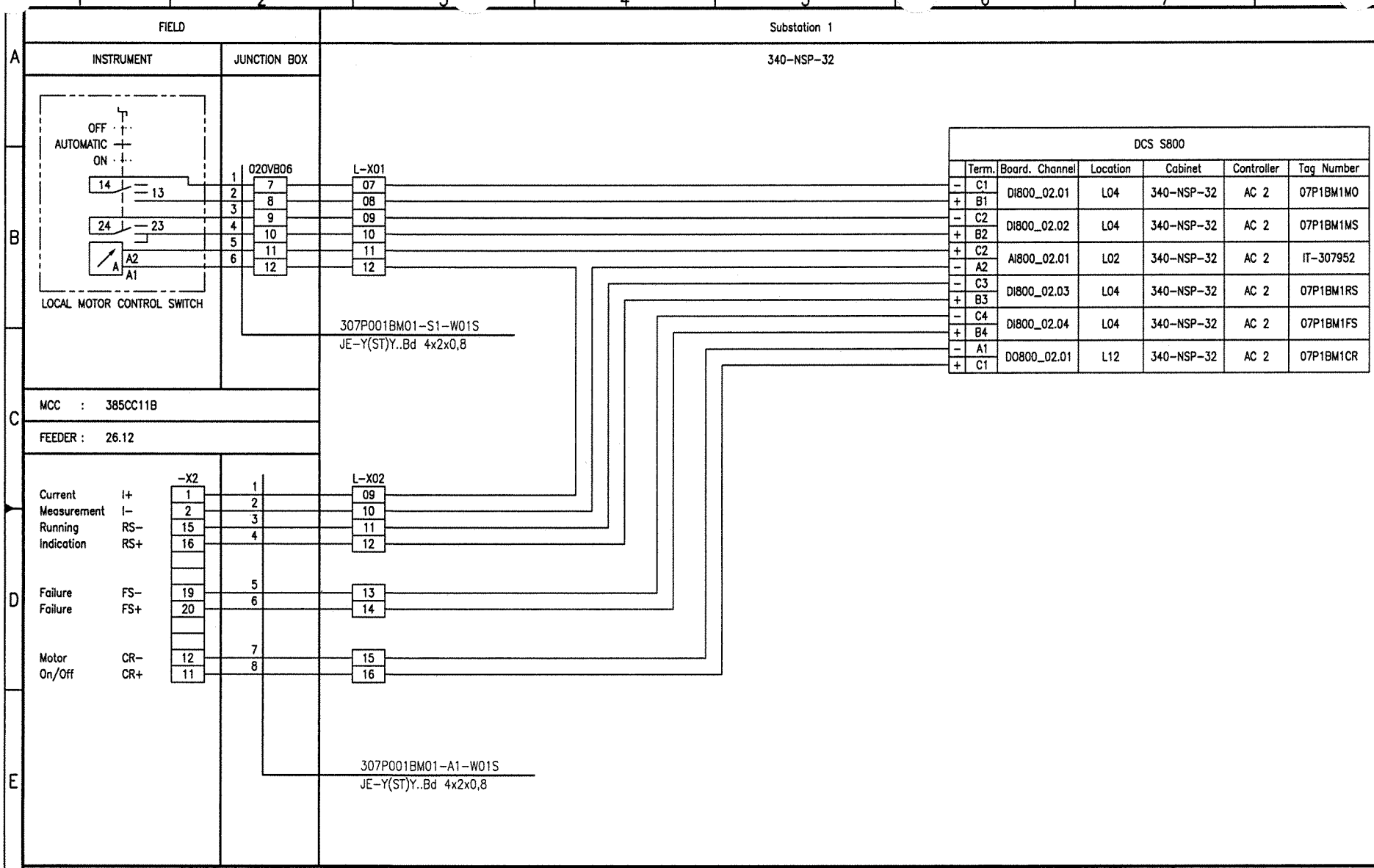

Document-ID-BAR-Code

Rev.	Date	Name (Drawn/Prepared)	Date	Name (Checked)	Date	Name (Approved)	Description	Acc. Code
01	20.09.06	Hie Hie	20.09.06	Heuer	20.09.06	Heuer	AS BUILT	

Pro. Unit	TON	Cat. Code	Acc. Code	Status

Con. Unit	Type of Document	Order No.	Scale	Tot. Sheets
	DH			

	Date	Name
Drawn	07.03.2005	Hielscher
Prepared	07.03.2005	Hohmann
Checked	07.03.2005	Heuer
Approved	07.03.2005	Heuer

Store Location: Server \\p013040\013040-ADA
Store Location: Folder \Ei-ET\DH_el-wiring-diag\
Store Name 01-3040_307P001BM01_000_01.dwg

Code: UAN 01-3040 | Document ID UD-EL-G00-FS-0001 | Part | Rev. 01 | Group

Uhde

All rights reserved © Uhde GmbH

AMMONIA / UREA PROJECT SUEZ II

Designation
Wiring diagram
307P001BM01

ISO A3

BORDER-A3_013040.dwg / AG03A3_013040.dwg / 17.05.2004

FIELD		Substation 1
INSTRUMENT	JUNCTION BOX	340-NSP-32

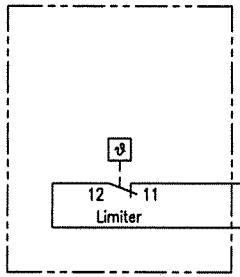

TEMPERATURE LIMITER
TSH 307072

MCC : 385CC11A

FEEDER : 10.06A

		-X2		L-X07
Limiter	LI	3		
Limiter	LI	4		
Failure	FS-	19	1	11
Failure	FS+	20	2	12
Heating	CR-	12	3	13
Start	CR+	11	4	14

307U001-EH1-A1-W01S
JE-Y(ST)Y..Bd 4x2x0,8

DCS S800

	Term.	Board. Channel	Location	Cabinet	Controller	Tag Number
-	C1	DI800_04.01	L06	340-NSP-32	AC 2	07U1EH1FS
+	B1					
-	A6	DO800_02.06	L12	340-NSP-32	AC 2	07U1EH1CR
+	C6					

Document-ID-BAR-Code

Rev.	Date	Name (Drawn/Prepared)	Date	Name (Checked)	Date	Name (Approved)	Description	Acc. Code
01	20.09.06	Hie Hie	20.09.06	Heuer	20.09.06	Heuer	AS BUILT	

UAN	Document ID	Part	Rev.	Group
01-3040	UD-EL-G00-FS-0001		01	

Code

Pro. Unit	TON	Cat. Code	Acc. Code	Status

Con. Unit	Type of Document	Order No.	Scale	Tot. Sheets
	DH			

	Date	Name
Drawn	07.03.2005	Hielscher
Prepared	07.03.2005	Hohmann
Checked	07.03.2005	Heuer
Approved	07.03.2005	Heuer

AMMONIA / UREA
PROJECT
SUEZ II

Uhde

All rights reserved
© Uhde GmbH

Designation
Wiring diagram
307U001-EH1

Store Location: Server
\\p013040\013040-ADA

Store Location: Folder
\EI-ET\DH_el-wiring-diag\

Store Name
01-3040_307U001-EH1_000_01.dwg

ISO A3

BORDER-A3_013040.dwg / AG3A3_013040.dwg / 17.05.2004

FIELD		Substation 1
INSTRUMENT	JUNCTION BOX	340-NSP-32

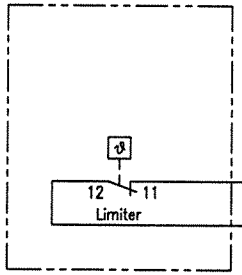

MCC : 385CC11B

FEEDER : 28.06C

		-X2
Limiter	LI	3
Limiter	LI	4
Failure	FS-	19
Failure	FS+	20
Heating	CR-	12
Start	CR+	11

	L-X07
1	15
2	16
3	17
4	18

307U001-EH2-A1-W01S
JE-Y(ST)Y..Bd 4x2x0,8

DCS S800						
	Term.	Board. Channel	Location	Cabinet	Controller	Tag Number
-	C10	DI800_06.10	L08	340-NSP-32	AC 2	07U1EH2FS
+	B10					
-	A7	DO800_01.07	L11	340-NSP-32	AC 2	07U1EH2CR
+	C7					

Document-ID-BAR-Code

Rev.	Date	Name (Drawn/Prepared)	Date	Name (Checked)	Date	Name (Approved)	Description	Acc. Code
01	20.09.06	Hie Hie	20.09.06	Heuer	20.09.06	Heuer	AS BUILT	

UAN	Document ID	Part	Rev.	Group
01-3040	UD-EL-G00-FS-0001		01	

Code

Pro. Unit	TON	Cat. Code	Acc. Code	Status

Con. Unit	Type of Document	Order No.	Scale	Tot. Sheets
	DH			

	Date	Name
Drawn	07.03.2005	Hielscher
Prepared	07.03.2005	Hohmann
Checked	07.03.2005	Heuer
Approved	07.03.2005	Heuer

AMMONIA / UREA
PROJECT
SUEZ II

Uhde

All rights reserved
© Uhde GmbH

Designation
Wiring diagram
307U001-EH2

Store Location: Server
\\p013040\013040-ADA

Store Location: Folder
\Ei-ET\DH_el-wiring-diag\

Store Name
01-3040_307U001-EH2_000_01.dwg

ISO A3

BORDER-A3_013040.dwg / A00A3_013040.dwg / 17.05.2004

FIELD		Substation 1
INSTRUMENT	JUNCTION BOX	340-NSP-32

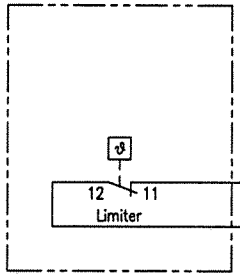

LOCAL MOTOR CONTROL SWITCH

MCC : 385CC11A

FEEDER : 10.06C

		-X2
Limiter	LI	3
Limiter	LI	4
Failure	FS-	19
Failure	FS+	20
Heating	CR-	12
Start	CR+	11

	L-X07
1	19
2	20
3	21
4	22

307U001-EH3-A1-W01S
JE-Y(ST)Y..Bd 4x2x0,8

DCS S800						
	Term.	Board. Channel	Location	Cabinet	Controller	Tag Number
-	C3	DI800_04.03	L06	340-NSP-32	AC 2	07U1EH3FS
+	B3					
-	A8	DO800_02.08	L12	340-NSP-32	AC 2	07U1EH3CR
+	C8					

Document-ID-BAR-Code

Rev.	Date	Name (Drawn/Prepared)	Date	Name (Checked)	Date	Name (Approved)	Description	Acc. Code
01	20.09.06	Hie Hie	20.09.06	Heuer	20.09.06	Heuer	AS BUILT	

UAN	Document ID	Part	Rev.	Group
01-3040	UD-EL-G00-FS-0001		01	

Code

Pro. Unit	TON	Cat. Code	Acc. Code	Status

Con. Unit	Type of Document	Order No.	Scale	Tot. Sheets
	DH			

	Date	Name
Drawn	07.03.2005	Hielscher
Prepared	07.03.2005	Hohmann
Checked	07.03.2005	Heuer
Approved	07.03.2005	Heuer

Uhde

All rights reserved © Uhde GmbH

AMMONIA / UREA PROJECT SUEZ II

Designation
Wiring diagram
307U001-EH3

Store Location: Server
\\p013040\013040-ADA

Store Location: Folder
\Ei-ET\DH_el-wiring-diag\

Store Name
01-3040_307U001-EH3_000_01.dwg

ISO A3

BORDER-A3_013040.dwg / AG03A3_013040.dwg / 17.05.2004

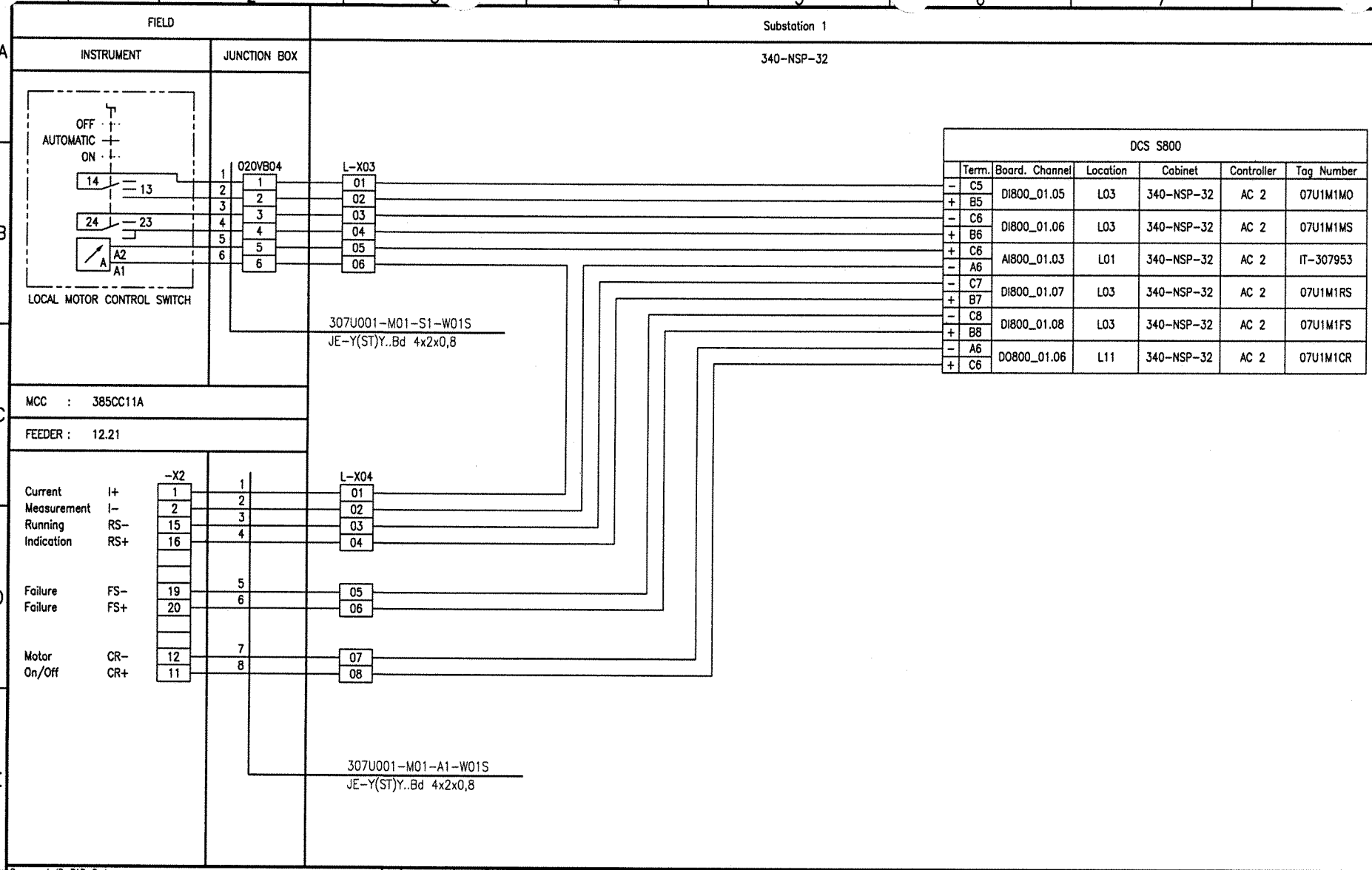

Document-ID-BAR-Code

Rev.	Date	Name (Drawn/Prepared)	Date	Name (Checked)	Date	Name (Approved)	Description	Acc. Code
01	20.09.06	Hie Hie	20.09.06	Heuer	20.09.06	Heuer	AS BUILT	

UAN	Document ID	Part	Rev.	Group
01-3040	UD-EL-G00-FS-0001		01	

Code

Uhde

All rights reserved © Uhde GmbH

Pro. Unit	TON	Cat. Code	Acc. Code	Status

Con. Unit	Type of Document	Order No.	Scale	Tot. Sheets
	DH			

	Date	Name
Drawn	07.03.2005	Hielscher
Prepared	07.03.2005	Hohmann
Checked	07.03.2005	Heuer
Approved	07.03.2005	Heuer

AMMONIA / UREA PROJECT SUEZ II

Designation
Wiring diagram
307U001-M01

Store Location: Server \\p013040\013040-ADA
Store Location: Folder \Ei-ET\DH_el-wiring-diag\
Store Name 01-3040_307U001-M01_000_01.dwg

ISO A3

BORDER-A3_013040.dwg / AQ03A3_013040.dwg / 17.05.2004

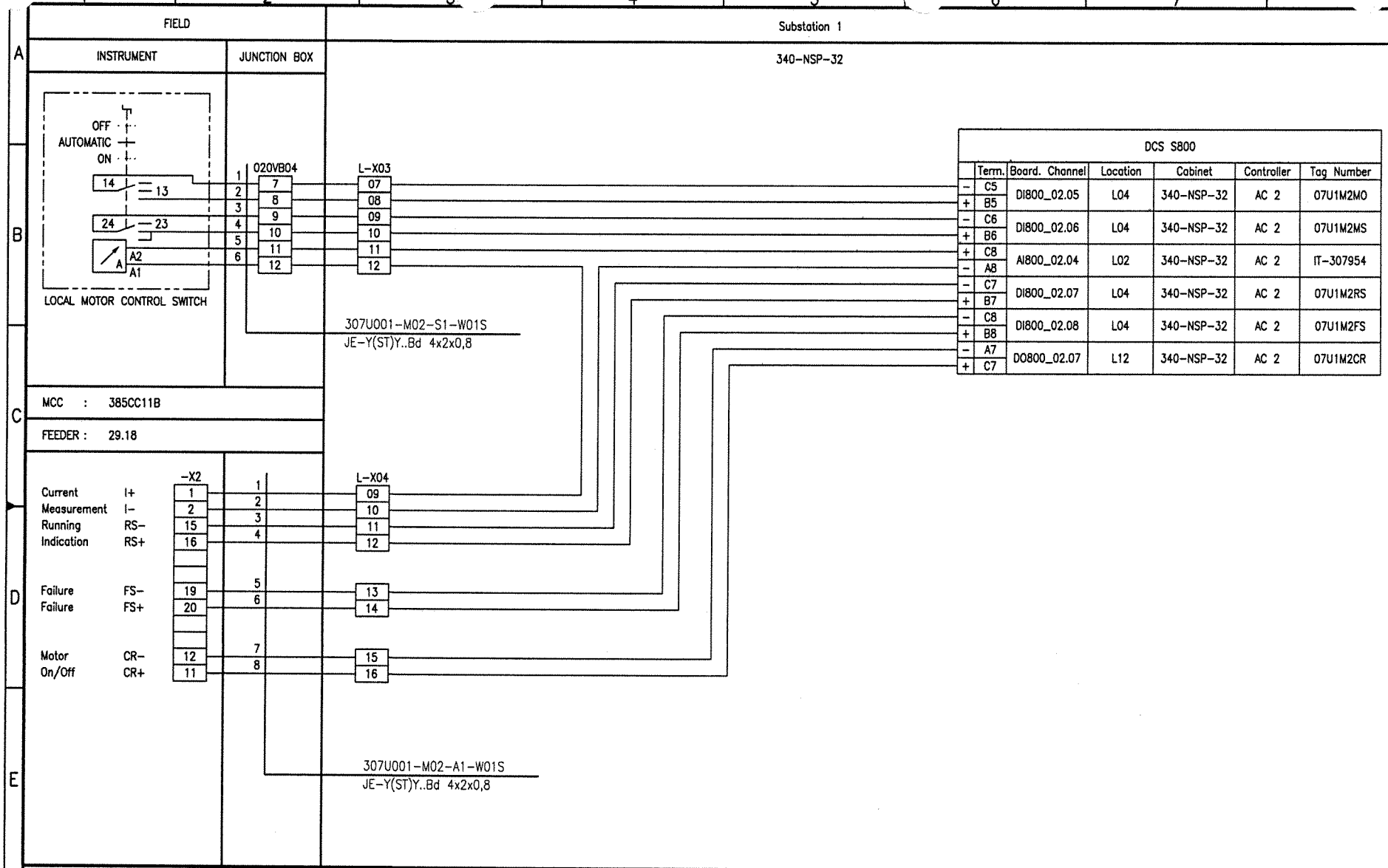

Document-ID-BAR-Code

Rev.	Date	Name (Drawn/Prepared)	Date	Name (Checked)	Date	Name (Approved)	Description	Acc. Code
01	20.09.06	Hie Hie	20.09.06	Heuer	20.09.06	Heuer	AS BUILT	

UAN	Document ID	Part	Rev.	Group
01-3040	UD-EL-G00-FS-0001		01	

Code

Uhde

All rights reserved © Uhde GmbH

Pro. Unit	TON	Cat. Code	Acc. Code	Status
Con. Unit	Type of Document: DH	Order No.	Scale	Tot. Sheets

	Date	Name
Drawn	07.03.2005	Hielscher
Prepared	07.03.2005	Hohmann
Checked	07.03.2005	Heuer
Approved	07.03.2005	Heuer

AMMONIA / UREA PROJECT SUEZ II

Designation
Wiring diagram
307U001-M02

Store Location: Server \\p013040\013040-ADA
Store Location: Folder \EI-ET\DH_el-wiring-diag\
Store Name 01-3040_307U001-M02_000_01.dwg

ISO A3

BORDER-A3_013040.dwg / A03A3_013040.dwg / 17.05.2004

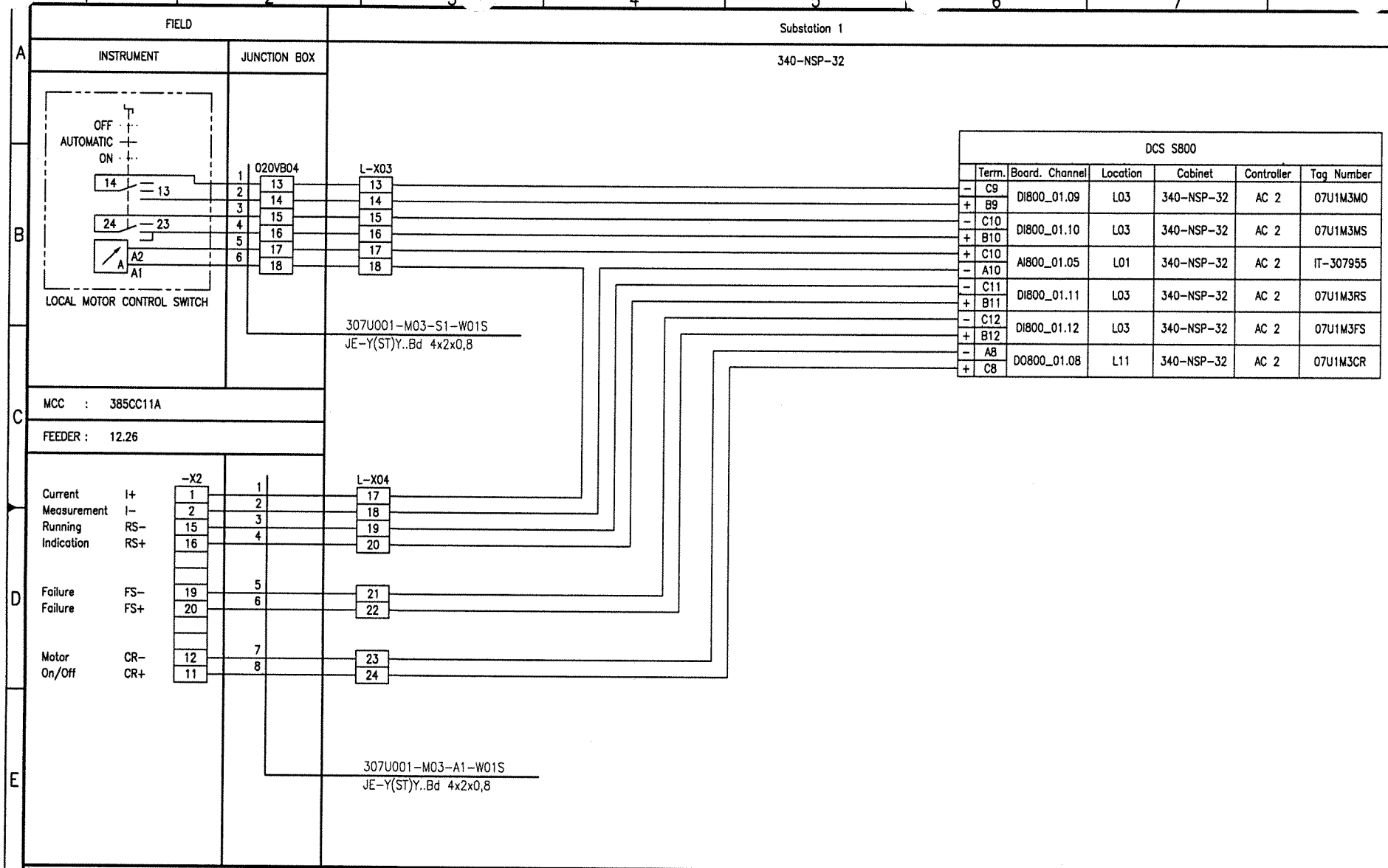

Document-ID-BAR-Code

Rev.	Date	Name (Drawn/Prepared)	Date	Name (Checked)	Date	Name (Approved)	Description	Acc. Code
01	20.09.06	Hie Hie	20.09.06	Heuer	20.09.06	Heuer	AS BUILT	

UAN	Document ID	Part	Rev.	Group
01-3040	UD-EL-G00-FS-0001		01	

Code

Uhde

All rights reserved © Uhde GmbH

Pro. Unit	TON	Cat. Code	Acc. Code	Status

Con. Unit	Type of Document	Order No.	Scale	Tot. Sheets
	DH			

	Date	Name
Drawn	07.03.2005	Hielscher
Prepared	07.03.2005	Hohmann
Checked	07.03.2005	Heuer
Approved	07.03.2005	Heuer

AMMONIA / UREA PROJECT SUEZ II

Designation
Wiring diagram
307U001-M03

Store Location: Server
\\p013040\013040-ADA

Store Location: Folder
\Ei-ET\DH_el-wiring-diag\

Store Name
01-3040_307U001-M03_000_01.dwg

ISO A3

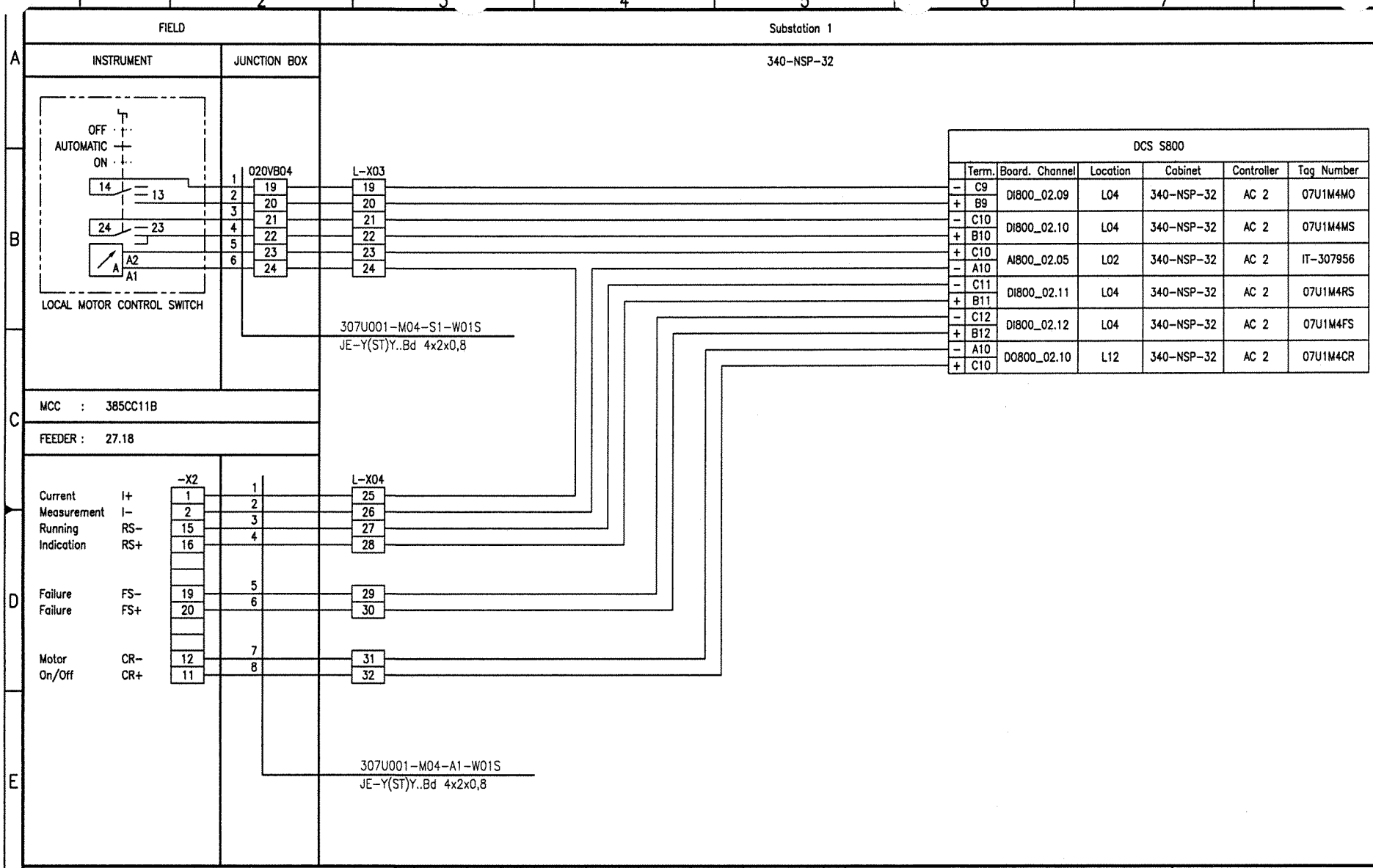

Document-ID-BAR-Code

Rev.	Date	Name (Drawn/Prepared)	Date	Name (Checked)	Date	Name (Approved)	Description	Acc. Code
01	20.09.06	Hie Hie	20.09.06	Heuer	20.09.06	Heuer	AS BUILT	

UAN	Document ID	Part	Rev.	Group
01-3040	UD-EL-G00-FS-0001		01	

Code

Uhde

All rights reserved © Uhde GmbH

Pro. Unit	TON	Cat. Code	Acc. Code	Status

Con. Unit	Type of Document	Order No.	Scale	Tot. Sheets
	DH			

	Date	Name
Drawn	07.03.2005	Hielscher
Prepared	07.03.2005	Hohmann
Checked	07.03.2005	Heuer
Approved	07.03.2005	Heuer

AMMONIA / UREA
PROJECT
SUEZ II

Designation
Wiring diagram
307U001-M04

Store Location: Server
\\p013040\013040-ADA

Store Location: Folder
\Ei-ET\DH_el-wiring-diag\

Store Name
01-3040_307U001-M04_000_01.dwg

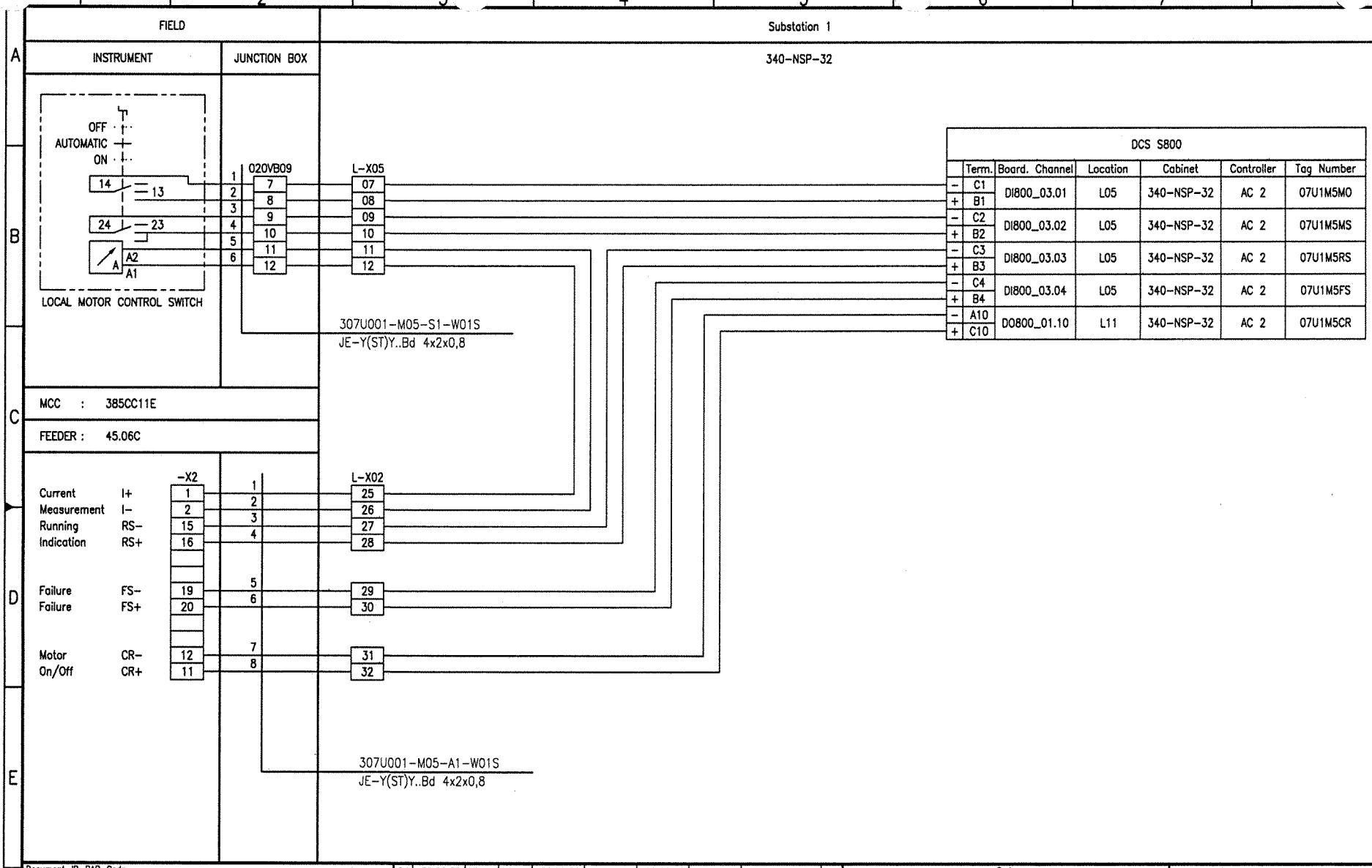

Document-ID-BAR-Code

Rev.	Date	Name (Drawn/Prepared)	Date	Name (Checked)	Date	Name (Approved)	Description	Acc. Code
01	20.09.06	Hie Hie	20.09.06	Heuer	20.09.06	Heuer	AS BUILT	

UAN 01-3040 | Document ID UD-EL-G00-FS-0001 | Part | Rev. 01 | Group

Pro. Unit | TON | Cat. Code | Acc. Code | Status

Con. Unit | Type of Document DH | Order No. | Scale | Tot. Sheets

	Date	Name
Drawn	07.03.2005	Hielscher
Prepared	07.03.2005	Hohmann
Checked	07.03.2005	Heuer
Approved	07.03.2005	Heuer

Store Location: Server \\p013040\013040-ADA
Store Location: Folder \EI-ET\DH_el-wiring-diag\
Store Name 01-3040_307U001-M05_000_01.dwg

AMMONIA / UREA PROJECT SUEZ II

Uhde

All rights reserved © Uhde GmbH

Designation
Wiring diagram
307U001-M05

ISO A3

BORDER-A3_013040.dwg / A003A3_013040.dwg / 17.05.2004

FIELD	Substation 1
INSTRUMENT / JUNCTION BOX	340-NSP-32

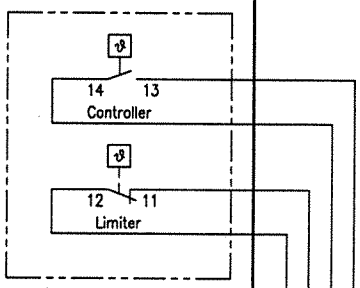

MCC : 385CC11A

FEEDER : 12.06A

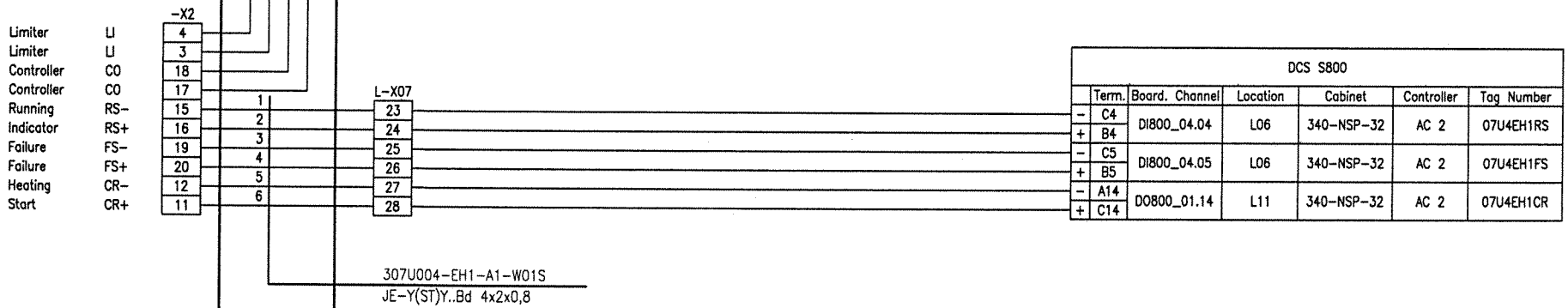

DCS S800						
	Term.	Board. Channel	Location	Cabinet	Controller	Tag Number
-	C4	DI800_04.04	L06	340-NSP-32	AC 2	07U4EH1RS
+	B4					
-	C5	DI800_04.05	L06	340-NSP-32	AC 2	07U4EH1FS
+	B5					
-	A14	DO800_01.14	L11	340-NSP-32	AC 2	07U4EH1CR
+	C14					

Document-ID-BAR-Code

Rev.	Date	Name (Drawn/Prepared)	Date	Name (Checked)	Date	Name (Approved)	Description	Acc. Code
01	20.09.06	Hie Hie	20.09.06	Heuer	20.09.06	Heuer	AS BUILT	

UAN	Document ID	Part	Rev.	Group
01-3040	UD-EL-G00-FS-0001		01	

Code

Uhde

All rights reserved © Uhde GmbH

Pro. Unit	TON	Cat. Code	Acc. Code	Status
Con. Unit	Type of Document: DH	Order No.	Scale	Tot. Sheets

	Date	Name
Drawn	07.03.2005	Hielscher
Prepared	07.03.2005	Hohmann
Checked	07.03.2005	Heuer
Approved	07.03.2005	Heuer

AMMONIA / UREA PROJECT SUEZ II

Designation: Wiring diagram 307U004-EH1

Store Location: Server \\p013040\013040-ADA

Store Location: Folder \Ei-ET\DH_el-wiring-diag\

Store Name 01-3040_307U004-EH1_000_01.dwg

ISO A3

BORDER-A3_013040.dwg / AG03A3_013040.dwg / 17.05.2004

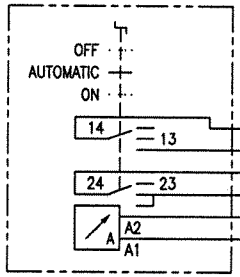

LOCAL MOTOR CONTROL SWITCH

FIELD

INSTRUMENT | JUNCTION BOX

Substation 1

340-NSP-32

020VB09

L-X05

307U004-M01-S1-W01S
JE-Y(ST)Y..Bd 4x2x0,8

MCC : 385CC11A

FEEDER : 12.06B

-X2

L-X02

		-X2		L-X02
Current Measurement	I+	1	1	17
	I-	2	2	18
Running Indication	RS-	15	3	19
	RS+	16	4	20
Failure Failure	FS-	19	5	21
	FS+	20	6	22
Motor On/Off	CR-	12	7	23
	CR+	11	8	24

307U004-M01-A1-W01S
JE-Y(ST)Y..Bd 4x2x0,8

DCS S800

	Term.	Board. Channel	Location	Cabinet	Controller	Tag Number
-	C5	DI800_03.05	L05	340-NSP-32	AC 2	07U4M1MO
+	B5					
-	C6	DI800_03.06	L05	340-NSP-32	AC 2	07U4M1MS
+	B6					
-	C7	DI800_03.07	L05	340-NSP-32	AC 2	07U4M1RS
+	B7					
-	C8	DI800_03.08	L05	340-NSP-32	AC 2	07U4M1FS
+	B8					
-	A11	DO800_01.11	L11	340-NSP-32	AC 2	07U4M1CR
+	C11					

Document-ID-BAR-Code

Rev.	Date	Name (Drawn/Prepared)	Date	Name (Checked)	Date	Name (Approved)	Description	Acc. Code
01	20.09.06	Hie Hie	20.09.06	Heuer	20.09.06	Heuer	AS BUILT	

UAN	Document ID	Part	Rev.	Group
01-3040	UD-EL-G00-FS-0001		01	

Code

Uhde

All rights reserved © Uhde GmbH

Pro. Unit	TON	Cat. Code	Acc. Code	Status
Con. Unit	Type of Document: DH	Order No.	Scale	Tot. Sheets

	Date	Name
Drawn	07.03.2005	Hielscher
Prepared	07.03.2005	Hohmann
Checked	07.03.2005	Heuer
Approved	07.03.2005	Heuer

AMMONIA / UREA PROJECT SUEZ II

Designation
Wiring diagram
307U004-M01

Store Location: Server
\\p013040\013040-ADA

Store Location: Folder
\EI-ET\DH_el-wiring-diag\

Store Name
01-3040_307U004-M01_000_01.dwg

ISO A3

BORDER-A3_013040.dwg / AG03A3_013040.dwg / 17.05.2004

CONTENTS

Loop Index (S 800 MOTORS) Processunit 309
Refrigeration

Tag No.	Rev.	Crossreference: See	Remarks	File No.
309MT01-M01	01			
309P001AM01	01			
309P001BM01	01			
309U001-EH1	01			
309U001-EH2	01			
309U001-EH3	01			
309U001-M01	01			
309U001-M02	01			

KB-FT-DH_el-wiring-diag\01-3040_Wiring_diagrams_coversheet_01.doc

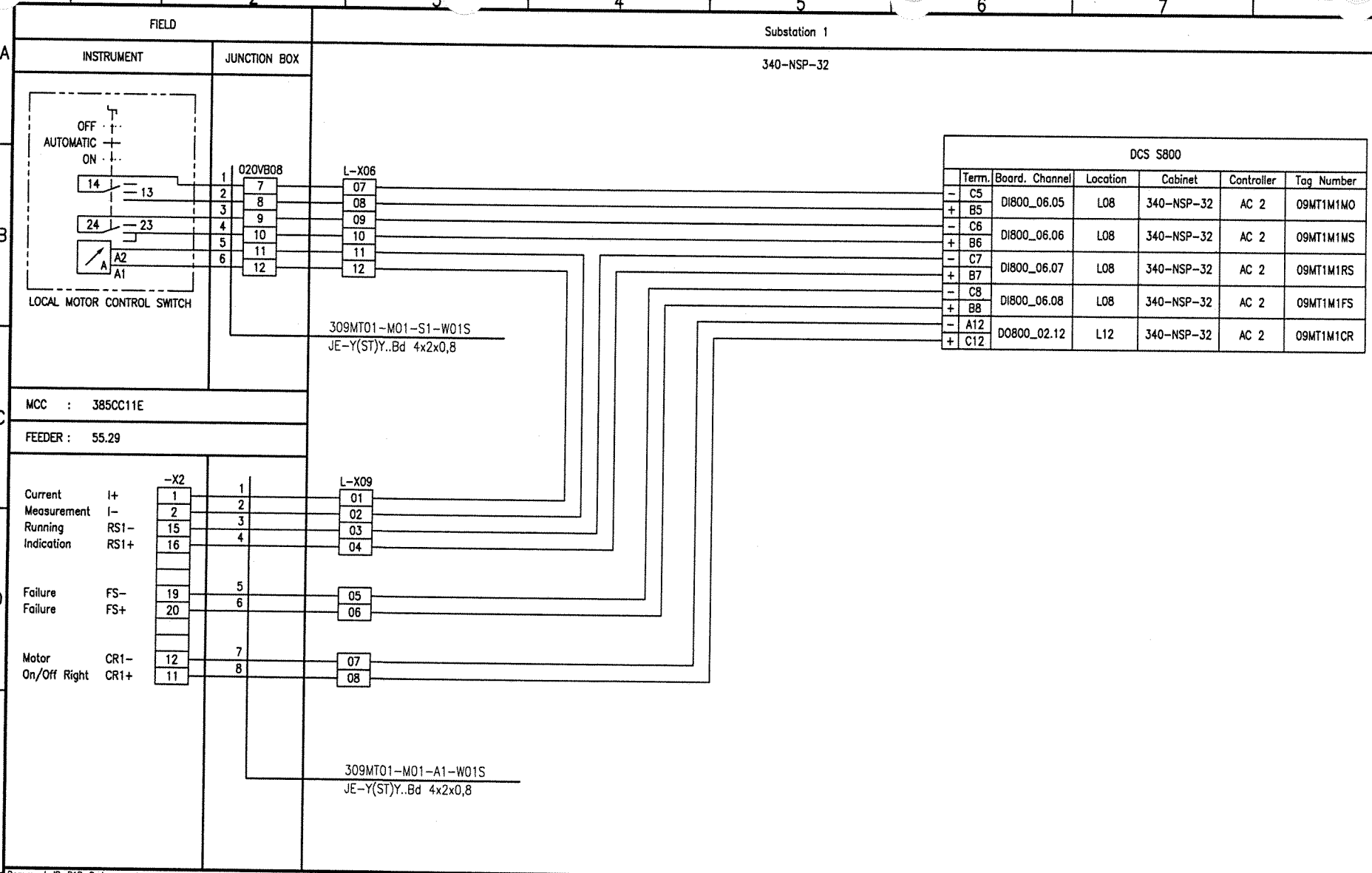
FIELD
INSTRUMENT
JUNCTION BOX
Substation 1
340-NSP-32
OFF
AUTOMATIC
ON
14
13
24
23
A2
A1
LOCAL MOTOR CONTROL SWITCH
020VB08
L-X06
309MT01-M01-S1-W01S
JE-Y(ST)Y..Bd 4x2x0,8
MCC : 385CC11E
FEEDER : 55.29
-X2
Current Measurement I+ I-
Running Indication RS1- RS1+
Failure FS- Failure FS+
Motor On/Off Right CR1- CR1+
L-X09
309MT01-M01-A1-W01S
JE-Y(ST)Y..Bd 4x2x0,8
DCS S800
Term. Board. Channel Location Cabinet Controller Tag Number
C5 DI800_06.05 L08 340-NSP-32 AC 2 09MT1M1MO
B5
C6 DI800_06.06 L08 340-NSP-32 AC 2 09MT1M1MS
B6
C7 DI800_06.07 L08 340-NSP-32 AC 2 09MT1M1RS
B7
C8 DI800_06.08 L08 340-NSP-32 AC 2 09MT1M1FS
B8
A12 DO800_02.12 L12 340-NSP-32 AC 2 09MT1M1CR
C12
BORDER-A3_013040.dwg / A03343_013040.dwg / 17.05.2004
Document-ID-BAR-Code
01 20.09.06 Hie Hie 20.09.06 Heuer 20.09.06 Heuer AS BUILT
Rev. Date Name Date Name Date Name Description Acc. Code
Drawn/Prepared Checked Approved
UAN 01-3040
Code Document ID UD-EL-G00-FS-0001 Part Rev. 01 Group
Uhde
All rights reserved © Uhde GmbH
Pro. Unit TON Cat. Code Acc. Code Status
Con. Unit Type of Document DH Order No. Scale Tot. Sheets
Date Name
Drawn 07.03.2005 Hielscher
Prepared 07.03.2005 Hohmann
Checked 07.03.2005 Heuer
Approved 07.03.2005 Heuer
AMMONIA / UREA PROJECT SUEZ II
Designation
Wiring diagram 309MT01-M01
Store Location: Server \\p013040\013040-ADA
Store Location: Folder \EI-ET\DH_el-wiring-diag\
Store Name 01-3040_309MT01-M01_000_01.dwg
ISO A3

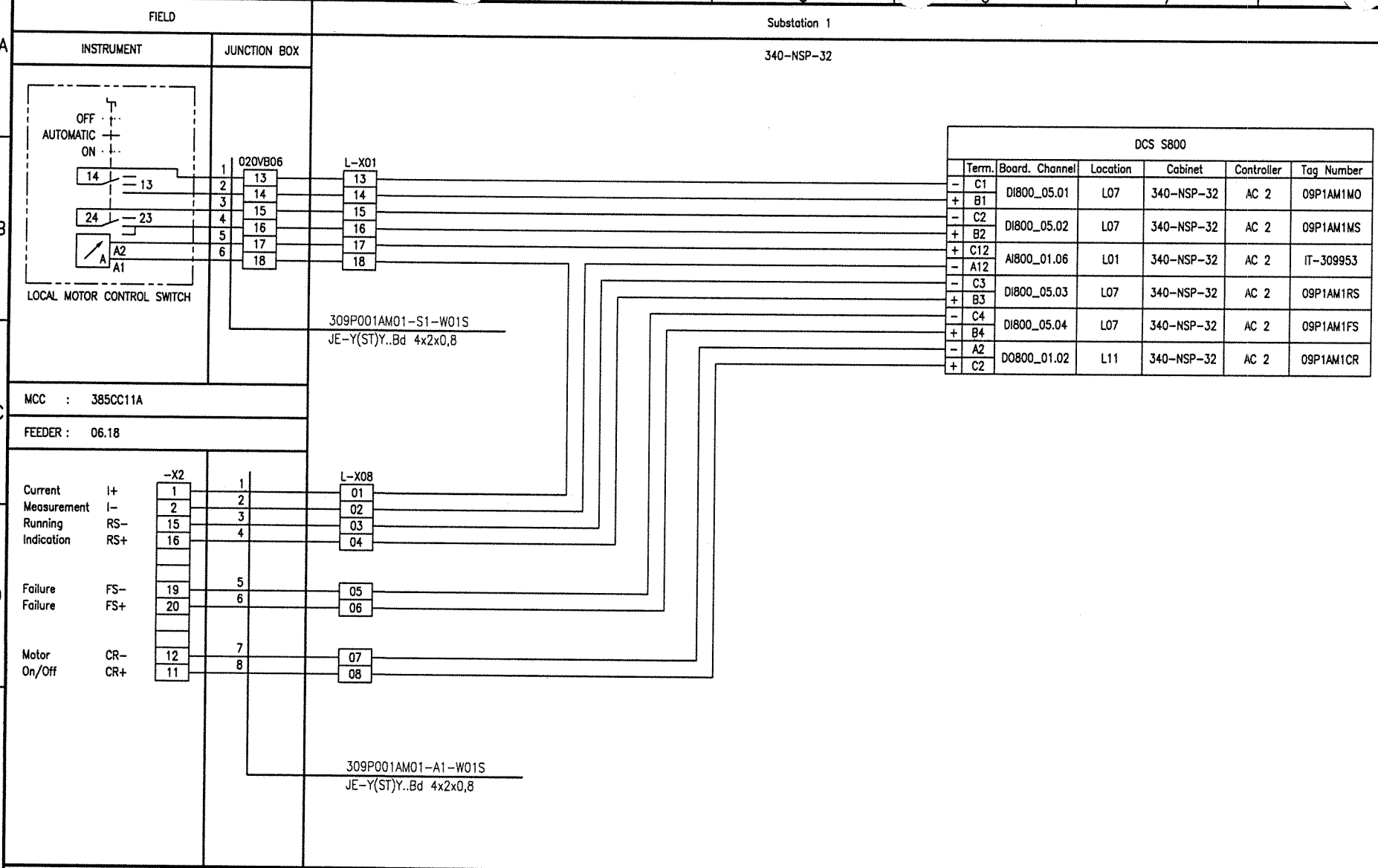

Document-ID-BAR-Code

Rev.	Date	Name (Drawn/Prepared)	Date	Name (Checked)	Date	Name (Approved)	Description	Acc. Code
01	20.09.06	Hie Hie	20.09.06	Heuer	20.09.06	Heuer	AS BUILT	

UAN	Document ID	Part	Rev.	Group
01-3040	UD-EL-G00-FS-0001		01	

Code

Uhde

All rights reserved © Uhde GmbH

Pro. Unit	TON	Cat. Code	Acc. Code	Status

Con. Unit	Type of Document	Order No.	Scale	Tot. Sheets
	DH			

	Date	Name
Drawn	07.03.2005	Hielscher
Prepared	07.03.2005	Hohmann
Checked	07.03.2005	Heuer
Approved	07.03.2005	Heuer

AMMONIA / UREA PROJECT SUEZ II

Designation
Wiring diagram
309P001AM01

Store Location: Server
\\p013040\013040-ADA

Store Location: Folder
\EI-ET\DH_el-wiring-diag\

Store Name
01-3040_309P001AM01_000_01.dwg

ISO A3

BORDER-A3_013040.dwg / AG03A3_013040.dwg / 17.05.2004

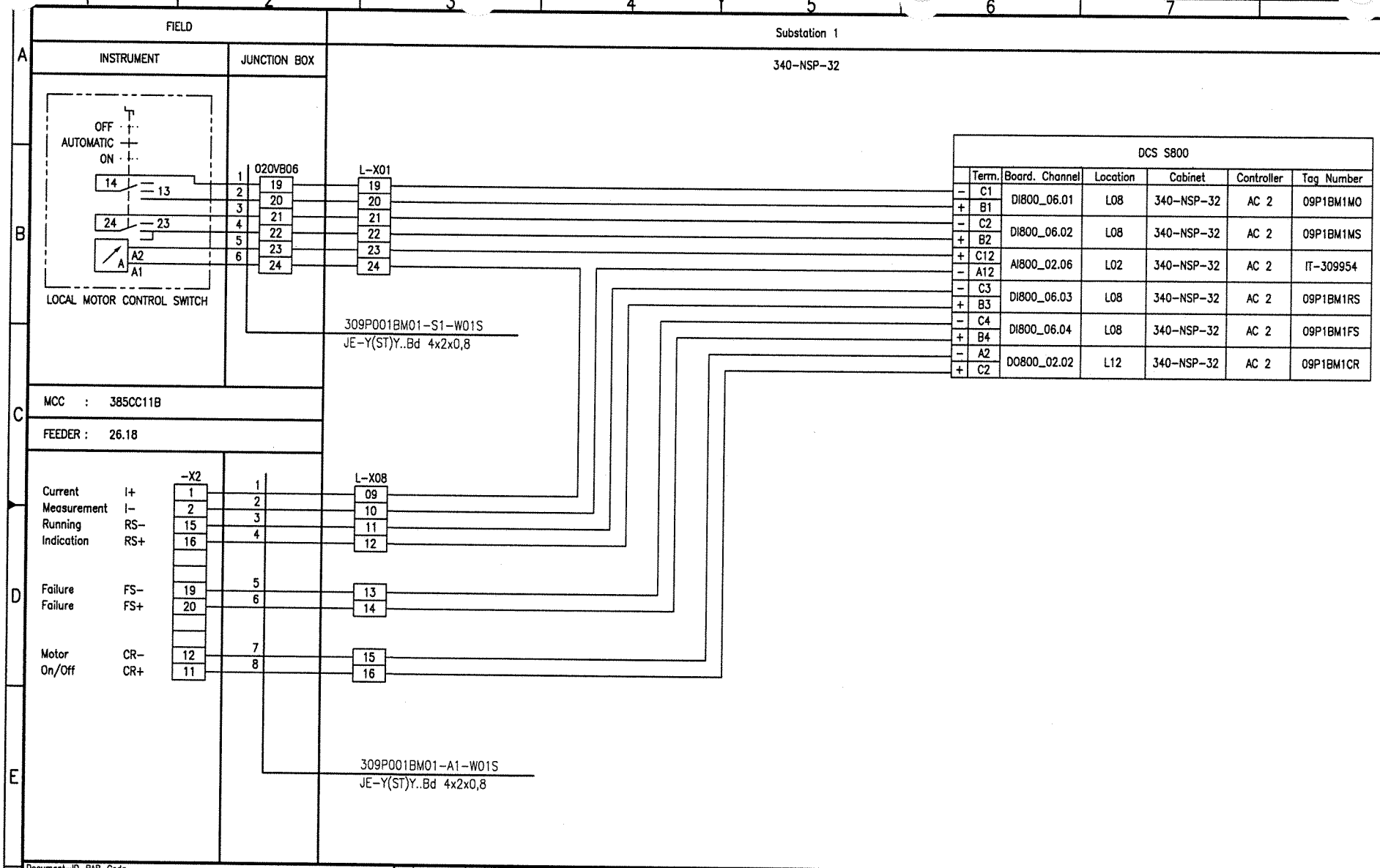

Document-ID-BAR-Code

Rev.	Date	Name (Drawn/Prepared)	Date	Name (Checked)	Date	Name (Approved)	Description	Acc. Code
01	20.09.06	Hie Hie	20.09.06	Heuer	20.09.06	Heuer	AS BUILT	

UAN	Code: Document ID	Part	Rev.	Group
01-3040	UD-EL-G00-FS-0001		01	

Uhde

All rights reserved © Uhde GmbH

Pro. Unit	TON	Cat. Code	Acc. Code	Status

Con. Unit	Type of Document	Order No.	Scale	Tot. Sheets
	DH			

	Date	Name
Drawn	07.03.2005	Hielscher
Prepared	07.03.2005	Hohmann
Checked	07.03.2005	Heuer
Approved	07.03.2005	Heuer

AMMONIA / UREA PROJECT SUEZ II

Designation
Wiring diagram
309P001BM01

Store Location: Server \\p013040\013040-ADA
Store Location: Folder \EI-ET\DH_el-wiring-diag\
Store Name 01-3040_309P001BM01_000_01.dwg

ISO A3

BORDER-A3_013040.dwg / A02343_013040.dwg / 17.05.2004

FIELD	
INSTRUMENT	JUNCTION BOX

Substation 1

340-NSP-32

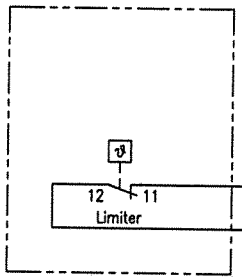

TEMPERATURE LIMITER
TSH-309041

MCC : 385CC11A

FEEDER : 12.06C

		-X2
Limiter	LI	4
Limiter	LI	3
Failure	FS-	19
Failure	FS+	20
Heating	CR-	12
Start	CR+	11

	L-X09
1	11
2	12
3	13
4	14

309U001-EH1-A1-W01S
JE-Y(ST)Y..Bd 4x2x0,8

DCS S800

	Term.	Board. Channel	Location	Cabinet	Controller	Tag Number
-	C9	DI800_06.09	L08	340-NSP-32	AC 2	09U1EH1FS
+	B9					
-	A13	DO800_02.13	L12	340-NSP-32	AC 2	09U1EH1CR
+	C13					

Document-ID-BAR-Code

Rev.	Date	Name (Drawn/Prepared)	Date	Name (Checked)	Date	Name (Approved)	Description	Acc. Code
01	20.09.06	Hie Hie	20.09.06	Heuer	20.09.06	Heuer	AS BUILT	

UAN	Document ID	Part	Rev.	Group
01-3040	UD-EL-G00-FS-0001		01	

Code

Uhde

All rights reserved © Uhde GmbH

Pro. Unit	TON	Cat. Code	Acc. Code	Status
Con. Unit	Type of Document: DH	Order No.	Scale	Tot. Sheets

	Date	Name
Drawn	07.03.2005	Hielscher
Prepared	07.03.2005	Hohmann
Checked	07.03.2005	Heuer
Approved	07.03.2005	Heuer

AMMONIA / UREA
PROJECT
SUEZ II

Designation
Wiring diagram
309U001-EH1

Store Location: Server
\\p013040\013040-ADA

Store Location: Folder
\EI-ET\DH_el-wiring-diag\

Store Name
01-3040_309U001-EH1_000_01.dwg

ISO A3

BORDER-A3_013040.dwg / A0I3A3_013040.dwg / 17.05.2004

FIELD	Substation 1
INSTRUMENT / JUNCTION BOX	340-NSP-32

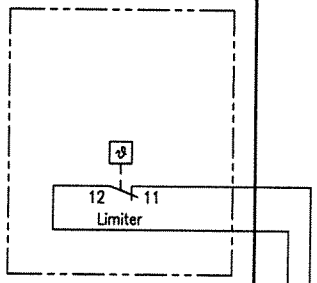

MCC : 385CC11B

FEEDER : 28.10B

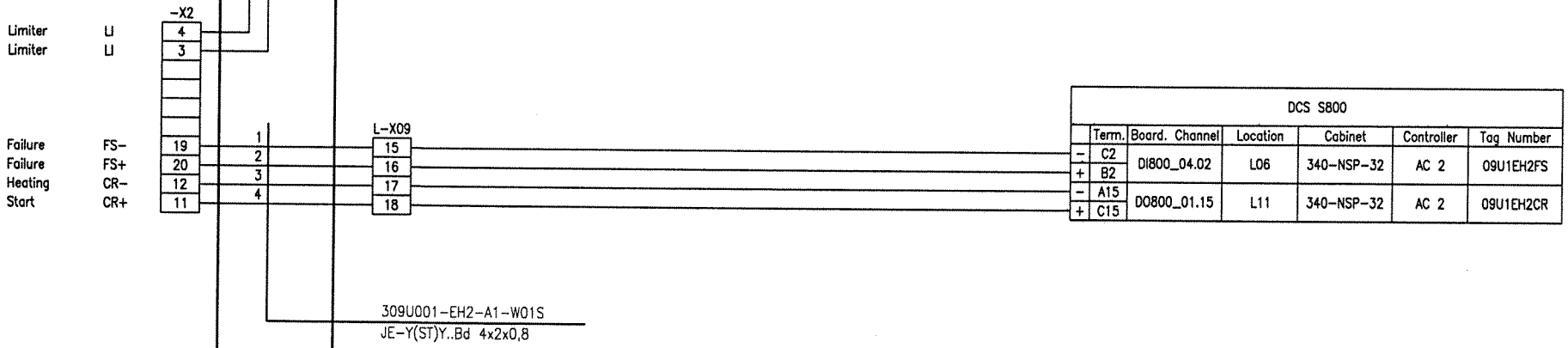

DCS S800						
	Term.	Board. Channel	Location	Cabinet	Controller	Tag Number
-	C2	DI800_04.02	L06	340-NSP-32	AC 2	09U1EH2FS
+	B2					
-	A15	DO800_01.15	L11	340-NSP-32	AC 2	09U1EH2CR
+	C15					

Document-ID-BAR-Code

Rev.	Date	Name (Drawn/Prepared)	Date	Name (Checked)	Date	Name (Approved)	Description	Acc. Code
01	20.09.06	Hie Hie	20.09.06	Heuer	20.09.06	Heuer	AS BUILT	

UAN	Code: Document ID	Part	Rev.	Group
01-3040	UD-EL-G00-FS-0001		01	

Uhde

All rights reserved © Uhde GmbH

Pro. Unit	TON	Cat. Code	Acc. Code	Status
Con. Unit	Type of Document: DH	Order No.	Scale	Tot. Sheets

	Date	Name
Drawn	07.03.2005	Hielscher
Prepared	07.03.2005	Hohmann
Checked	07.03.2005	Heuer
Approved	07.03.2005	Heuer

AMMONIA / UREA PROJECT SUEZ II

Designation: Wiring diagram 309U001-EH2

Store Location: Server \\p013040\013040-ADA

Store Location: Folder \EI-ET\DH_el-wiring-diag\

Store Name: 01-3040_309U001-EH2_000_01.dwg

ISO A3

BORDER-A3_013040.dwg / AG3A3_013040.dwg / 17.05.2004

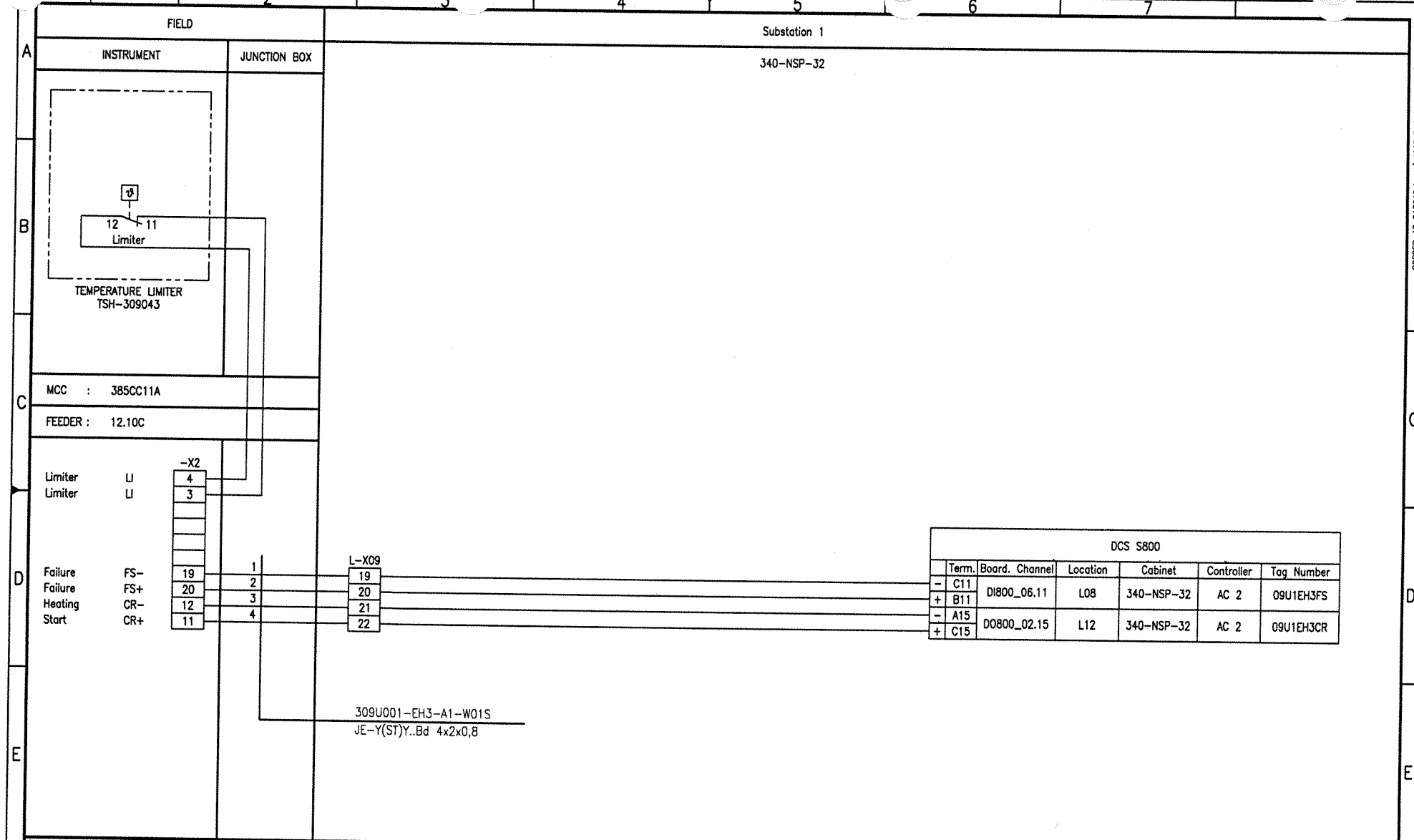

Document-ID-BAR-Code

Rev.	Date	Name	Date	Name	Date	Name	Description	Acc. Code
01	20.09.06	Hie Hie	20.09.06	Heuer	20.09.06	Heuer	AS BUILT	
	Drawn/Prepared		Checked		Approved			

UAN	Code: Document ID	Part	Rev.	Group
01-3040	UD-EL-G00-FS-0001		01	

Pro. Unit: TON | Cat. Code | Acc. Code | Status

Con. Unit | Type of Document: DH | Order No. | Scale | Tot. Sheets

	Date	Name
Drawn	07.03.2005	Hielscher
Prepared	07.03.2005	Hohmann
Checked	07.03.2005	Heuer
Approved	07.03.2005	Heuer

Store Location: Server \\p013040\013040-ADA
Store Location: Folder \EI-ET\DH_el-wiring-diag\
Store Name 01-3040_309U001-EH3_000_01.dwg

AMMONIA / UREA PROJECT SUEZ II

Uhde

All rights reserved © Uhde GmbH

Designation
Wiring diagram
309U001-EH3

ISO A3

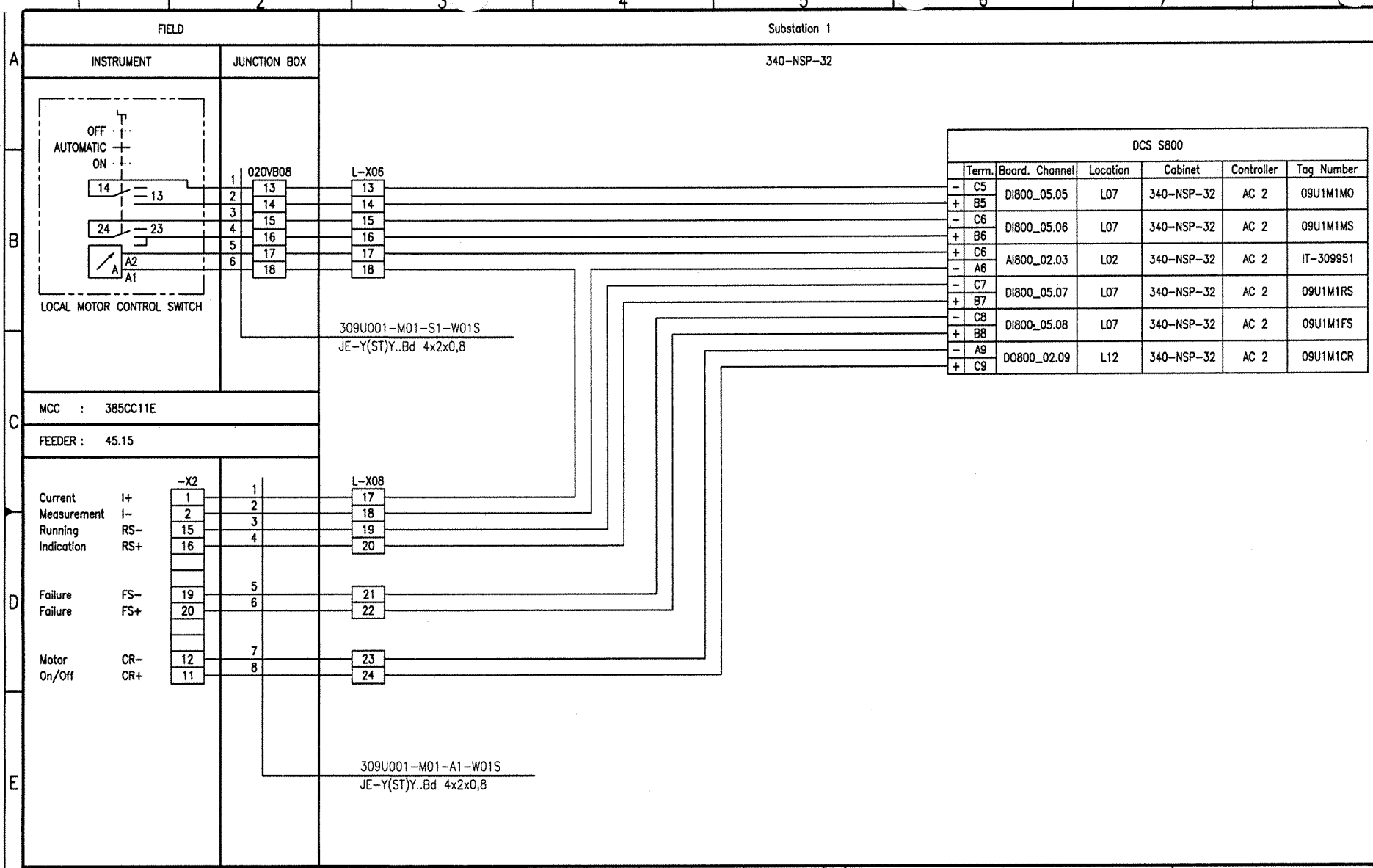

Document-ID-BAR-Code

Rev.	Date	Name (Drawn/Prepared)	Date	Name (Checked)	Date	Name (Approved)	Description	Acc. Code
01	20.09.06	Hie Hie	20.09.06	Heuer	20.09.06	Heuer	AS BUILT	

UAN	Document ID	Port	Rev.	Group
01-3040	UD-EL-G00-FS-0001		01	

Code

Uhde

All rights reserved © Uhde GmbH

Pro. Unit	TON	Cat. Code	Acc. Code	Status
Con. Unit	Type of Document: DH	Order No.	Scale	Tot. Sheets

	Date	Name
Drawn	07.03.2005	Hielscher
Prepared	07.03.2005	Hohmann
Checked	07.03.2005	Heuer
Approved	07.03.2005	Heuer

AMMONIA / UREA PROJECT SUEZ II

Designation
Wiring diagram
309U001-M01

Store Location: Server \\p013040\013040-ADA
Store Location: Folder \Ei-ET\DH_el-wiring-diag\
Store Name 01-3040_309U001-M01_000_01.dwg

ISO A3

BORDER-A3_013040.dwg / A3G3A3_013040.dwg / 17.05.2004

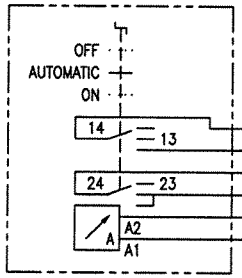

LOCAL MOTOR CONTROL SWITCH

FIELD | Substation 1

INSTRUMENT | JUNCTION BOX | 340-NSP-32

020VB08: 1–6 / 19–24

L-X06: 19–24

309U001-M02-S1-W01S
JE-Y(ST)Y..Bd 4x2x0,8

MCC : 385CC11E

FEEDER : 45.18

-X2

		-X2		L-X08
Current Measurement	I+	1	1	25
	I-	2	2	26
Running Indication	RS-	15	3	27
	RS+	16	4	28
Failure	FS-	19	5	29
Failure	FS+	20	6	30
Motor On/Off	CR-	12	7	31
	CR+	11	8	32

309U001-M02-A1-W01S
JE-Y(ST)Y..Bd 4x2x0,8

DCS S800

	Term.	Board. Channel	Location	Cabinet	Controller	Tag Number
-	C6	DI800_04.06	L06	340-NSP-32	AC 2	09U1M2MO
+	B6					
-	C7	DI800_04.07	L06	340-NSP-32	AC 2	09U1M2MS
+	B7					
+	C8	AI800_01.04	L01	340-NSP-32	AC 2	IT-309952
-	A8					
-	C8	DI800_04.08	L06	340-NSP-32	AC 2	09U1M2RS
+	B8					
-	C9	DI800_04.09	L06	340-NSP-32	AC 2	09U1M2FS
+	B9					
-	A9	DO800_01.09	L11	340-NSP-32	AC 2	09U1M2CR
+	C9					

Document-ID-BAR-Code

Rev.	Date	Name (Drawn/Prepared)	Date	Name (Checked)	Date	Name (Approved)	Description	Acc. Code
01	20.09.06	Hie Hie	20.09.06	Heuer	20.09.06	Heuer	AS BUILT	

UAN	Document ID	Part	Rev.	Group
01-3040	UD-EL-G00-FS-0001		01	

Code

Pro. Unit: TON | Cat. Code | Acc. Code | Status

Can. Unit | Type of Document: DH | Order No. | Scale | Tot. Sheets

	Date	Name
Drawn	07.03.2005	Hielscher
Prepared	07.03.2005	Hohmann
Checked	07.03.2005	Heuer
Approved	07.03.2005	Heuer

Uhde

All rights reserved © Uhde GmbH

AMMONIA / UREA PROJECT SUEZ II

Designation: Wiring diagram 309U001-M02

Store Location: Server \\p013040\013040-ADA

Store Location: Folder \Ei-ET\DH_el-wiring-diag\

Store Name: 01-3040_309U001-M02_000_01.dwg

ISO A3

BORDER-A3_013040.dwg / AG03A3_013040.dwg / 17.05.2004

CONTENTS

Loop Index (S 800 MOTORS) Processunit 310
Ammonia Recovery

Tag No.	Rev.	Crossreference: See	Remarks	File No.
310P001AM01	01			
310P001BM01	01			
310P002AM01	01			
310P002BM01	01			
310P003AM01	01			
310P003BM01	01			

I:\Ei-ET-DH_el-wiring-diag\01-3040_Wiring_diagrams_coversheet_01.doc

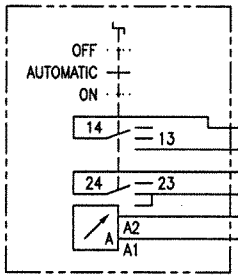

LOCAL MOTOR CONTROL SWITCH

FIELD | Substation 1

INSTRUMENT | JUNCTION BOX | 340-NSP-32

080VB01

L-X10

310P001AM01-S1-W01S
JE-Y(ST)Y..Bd 4x2x0,8

MCC : 385CC11A

FEEDER : 12.10B

-X2

L-X11

		-X2		L-X11
Current	I+	1	1	01
Measurement	I-	2	2	02
Running	RS-	15	3	03
Indication	RS+	16	4	04
Failure	FS-	19	5	05
Failure	FS+	20	6	06
Motor	CR-	12	7	07
On/Off	CR+	11	8	08

310P001AM01-A1-W01S
JE-Y(ST)Y..Bd 4x2x0,8

DCS S800

	Term.	Board. Channel	Location	Cabinet	Controller	Tag Number
-	C1	DI800_07.01	L09	340-NSP-32	AC 2	10P1AM1MO
+	B1					
-	C2	DI800_07.02	L09	340-NSP-32	AC 2	10P1AM1MS
+	B2					
-	C3	DI800_07.03	L09	340-NSP-32	AC 2	10P1AM1RS
+	B3					
-	C4	DI800_07.04	L09	340-NSP-32	AC 2	10P1AM1FS
+	B4					
-	A3	DO800_01.03	L11	340-NSP-32	AC 2	10P1AM1CR
+	C3					

Document-ID-BAR-Code

Rev.	Date	Name (Drawn/Prepared)	Date	Name (Checked)	Date	Name (Approved)	Description	Acc. Code
01	20.09.06	Hie Hie	20.09.06	Heuer	20.09.06	Heuer	AS BUILT	

UAN	Document ID	Part	Rev.	Group
01-3040	UD-EL-G00-FS-0001		01	

Code

Uhde

All rights reserved © Uhde GmbH

Pro. Unit	TON	Cat. Code	Acc. Code	Status

Con. Unit	Type of Document	Order No.	Scale	Tot. Sheets
	DH			

	Date	Name
Drawn	10.03.2005	Hielscher
Prepared	10.03.2005	Hohmann
Checked	10.03.2005	Heuer
Approved	10.03.2005	Heuer

AMMONIA / UREA PROJECT SUEZ II

Designation
Wiring diagram
310P001AM01

Store Location: Server
\\p013040\013040-ADA

Store Location: Folder
\Ei-ET\DH_el-wiring-diag\

Store Name
01-3040_310P001AM01_000_01.dwg

ISO A3

BORDER-A3_013040.dwg / AG0343_013040.dwg / 17.05.2004

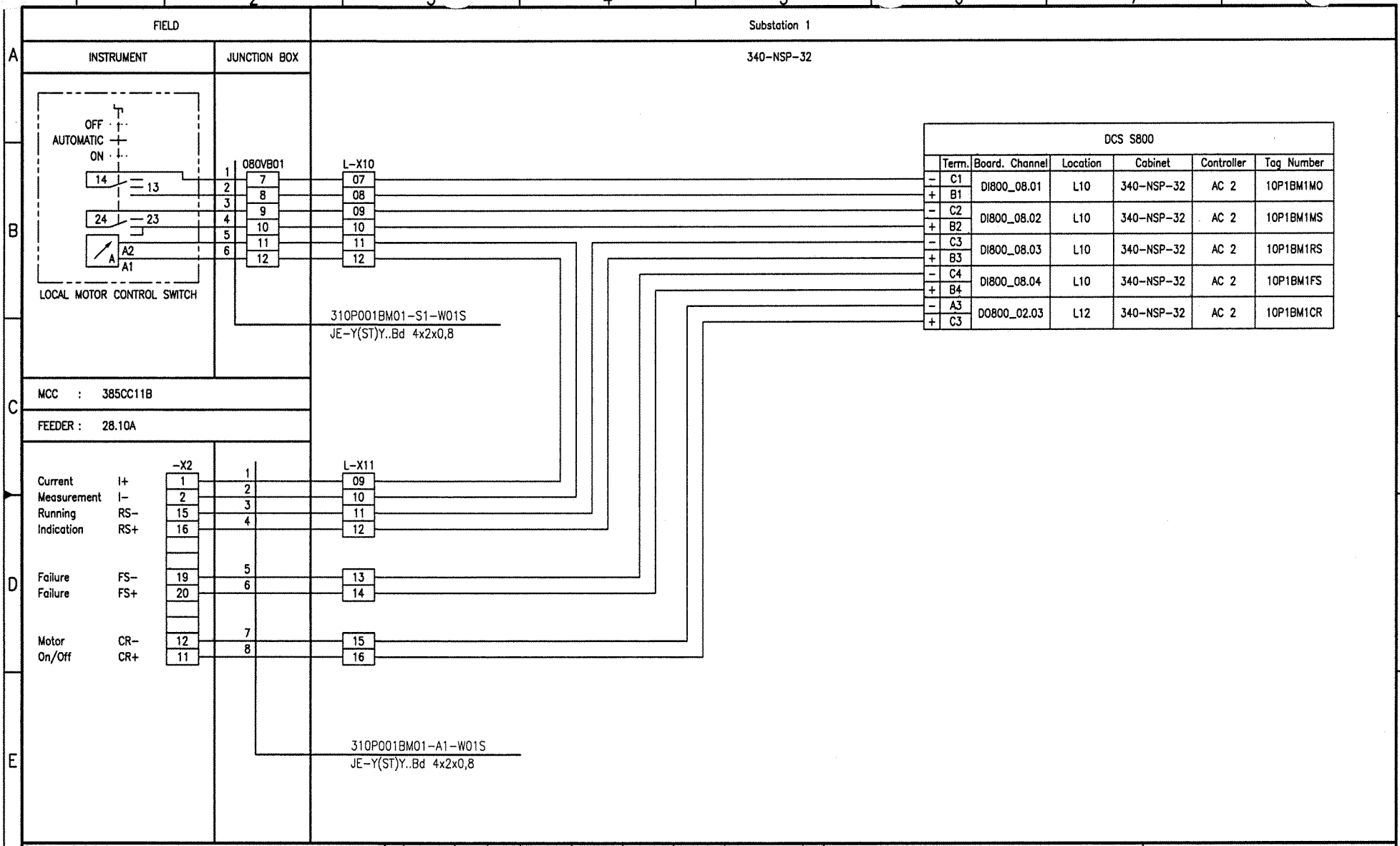

Document-ID-BAR-Code

Rev.	Date	Name (Drawn/Prepared)	Date	Name (Checked)	Date	Name (Approved)	Description	Acc. Code
01	20.09.06	Hie Hie	20.09.06	Heuer	20.09.06	Heuer	AS BUILT	

UAN	Document ID	Part	Rev.	Group
01-3040	UD-EL-G00-FS-0001		01	

Code

Uhde

All rights reserved © Uhde GmbH

Pro. Unit	TON	Cat. Code	Acc. Code	Status

Con. Unit	Type of Document	Order No.	Scale	Tot. Sheets
	DH			

	Date	Name
Drawn	10.03.2005	Hielscher
Prepared	10.03.2005	Hohmann
Checked	10.03.2005	Heuer
Approved	10.03.2005	Heuer

AMMONIA / UREA PROJECT SUEZ II

Designation
Wiring diagram
310P001BM01

Store Location: Server
\\p013040\013040-ADA

Store Location: Folder
\Ei-ET\DH_el-wiring-diag\

Store Name
01-3040_310P001BM01_000_01.dwg

ISO A3

BORDER-A3_013040.dwg / AG3A3_013040.dwg / 17.05.2004

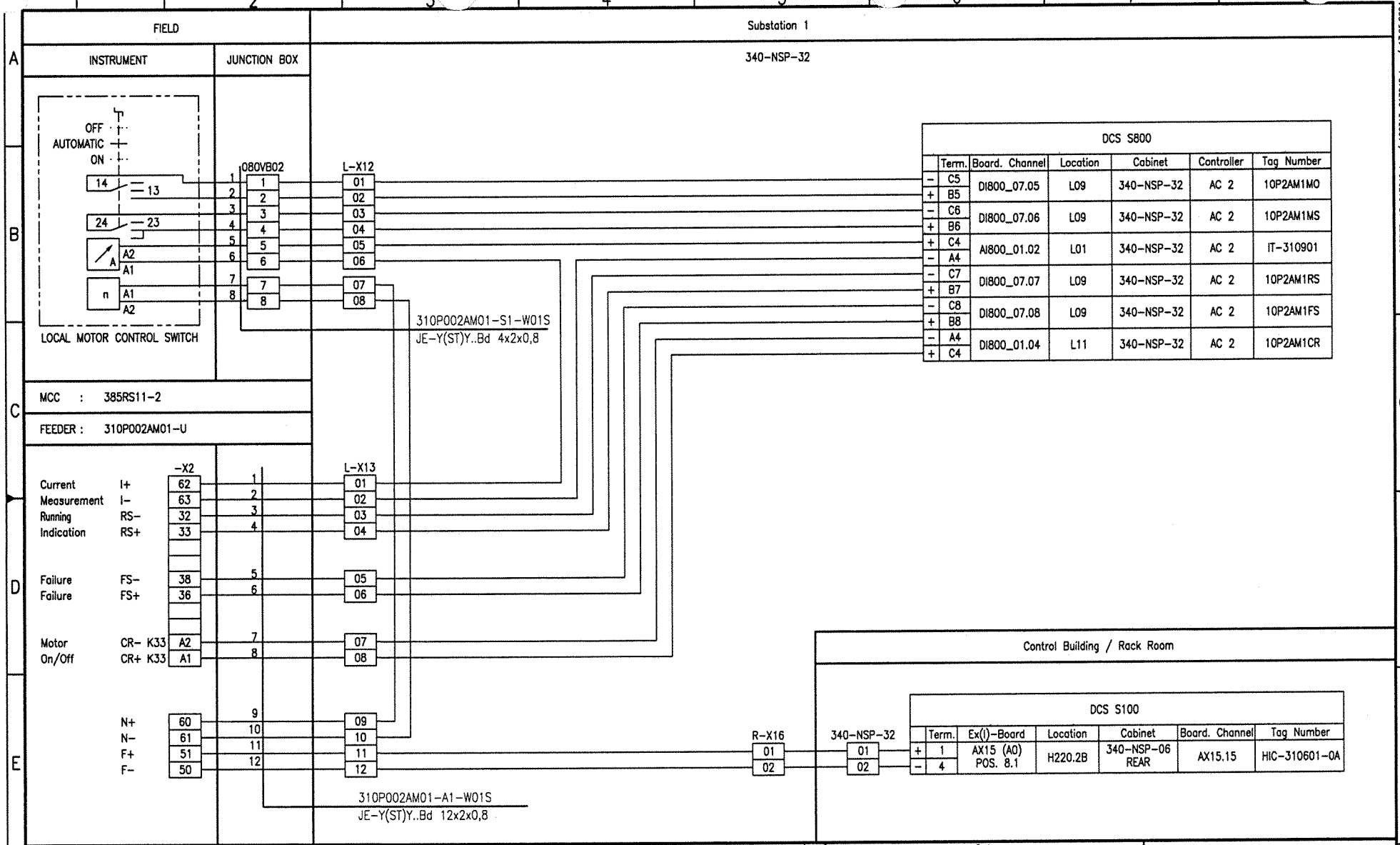

DCS S800						
	Term.	Board. Channel	Location	Cabinet	Controller	Tag Number
-	C5	DI800_07.05	L09	340-NSP-32	AC 2	10P2AM1MO
+	B5					
-	C6	DI800_07.06	L09	340-NSP-32	AC 2	10P2AM1MS
+	B6					
+	C4	AI800_01.02	L01	340-NSP-32	AC 2	IT-310901
-	A4					
-	C7	DI800_07.07	L09	340-NSP-32	AC 2	10P2AM1RS
+	B7					
-	C8	DI800_07.08	L09	340-NSP-32	AC 2	10P2AM1FS
+	B8					
-	A4	DI800_01.04	L11	340-NSP-32	AC 2	10P2AM1CR
+	C4					

DCS S100						
	Term.	Ex(i)-Board	Location	Cabinet	Board. Channel	Tag Number
+	1	AX15 (AO) POS. 8.1	H220.2B	340-NSP-06 REAR	AX15.15	HIC-310601-0A
-	4					

Rev.	Date	Name	Date	Name	Date	Name	Description	Acc. Code
01	20.09.06	Hie	20.09.06	Heuer	20.09.06	Heuer	AS BUILT	
	Drawn/Prepared		Checked		Approved			

UAN	Document ID	Part	Rev.	Group
01-3040	UD-EL-G00-FS-0001		01	

Code

Document-ID-BAR-Code

Pro. Unit	TON	Cat. Code	Acc. Code	Status

Con. Unit	Type of Document	Order No.	Scale	Tot. Sheets
	DH			

	Date	Name
Drawn	10.03.2005	Hielscher
Prepared	10.03.2005	Hohmann
Checked	10.03.2005	Heuer
Approved	10.03.2005	Heuer

AMMONIA / UREA PROJECT SUEZ II

Uhde

All rights reserved © Uhde GmbH

Designation
Wiring diagram
310P002AM01

ISO A3

Store Location: Server
\\p013040\013040-ADA

Store Location: Folder
\Ei-ET\DH_el-wiring-diag\

Store Name
01-3040_310P002AM01_000_01.dwg

FIELD | Substation 1

INSTRUMENT | JUNCTION BOX | 340-NSP-32

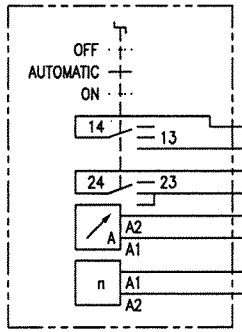

LOCAL MOTOR CONTROL SWITCH

080VB02

L-X12

310P002BM01-S1-W01S
JE-Y(ST)Y..Bd 4x2x0,8

MCC : 385RS11-3

FEEDER : 310P002BM01-U

-X2

L-X13

		-X2	L-X13
Current Measurement	I+	62	13
	I-	63	14
Running Indication	RS-	32	15
	RS+	33	16
Failure	FS-	38	17
Failure	FS+	36	18
Motor On/Off	CR- K33	A2	19
	CR+ K33	A1	20
	N+	60	21
	N-	61	22
	F+	51	23
	F-	50	24

310P002BM01-A1-W01S
JE-Y(ST)Y..Bd 12x2x0,8

DCS S800

	Term.	Board. Channel	Location	Cabinet	Controller	Tag Number
-	C5	DI800_08.05	L10	340-NSP-32	AC 2	10P2BM1MO
+	B5					
-	C6	DI800_08.06	L10	340-NSP-32	AC 2	10P2BM1MS
+	B6					
+	C4	AI800_02.02	L02	340-NSP-32	AC 2	IT-310902
-	A4					
-	C7	DI800_08.07	L10	340-NSP-32	AC 2	10P2BM1RS
+	B7					
-	C8	DI800_08.08	L10	340-NSP-32	AC 2	10P2BM1FS
+	B8					
-	A4	DO800_02.04	L12	340-NSP-32	AC 2	10P2BM1CR
+	C4					

Control Building / Rack Room

R-X16 | 340-NSP-32

DCS S100

	Term.	Ex(I)-Board	Location	Cabinet	Board. Channel	Tag Number
+	2	AX15 (A0) POS. 8.2	H220.2B	340-NSP-06 REAR	AX15.16	HIC-310601-0B
-	5					

Document-ID-BAR-Code

Rev.	Date	Name (Drawn/Prepared)	Date	Name (Checked)	Date	Name (Approved)	Description	Acc. Code
01	20.09.06	Hie Hie	20.09.06	Heuer	20.09.06	Heuer	AS BUILT	

UAN	Document ID	Part	Rev.	Group
01-3040	UD-EL-G00-FS-0001		01	

Code

Uhde

All rights reserved © Uhde GmbH

Pro. Unit	TON	Cat. Code	Acc. Code	Status

Con. Unit	Type of Document	Order No.	Scale	Tot. Sheets
	DH			

	Date	Name
Drawn	10.03.2005	Hielscher
Prepared	10.03.2005	Hohmann
Checked	10.03.2005	Heuer
Approved	10.03.2005	Heuer

AMMONIA / UREA PROJECT SUEZ II

Designation
Wiring diagram
310P002BM01

Store Location: Server
\\p013040\013040-ADA

Store Location: Folder
\EI-ET\DH_el-wiring-diag\

Store Name
01-3040_310P002BM01_000_01.dwg

ISO A3

BORDER-A3_013040.dwg / AD03A3_013040.dwg / 17.05.2004

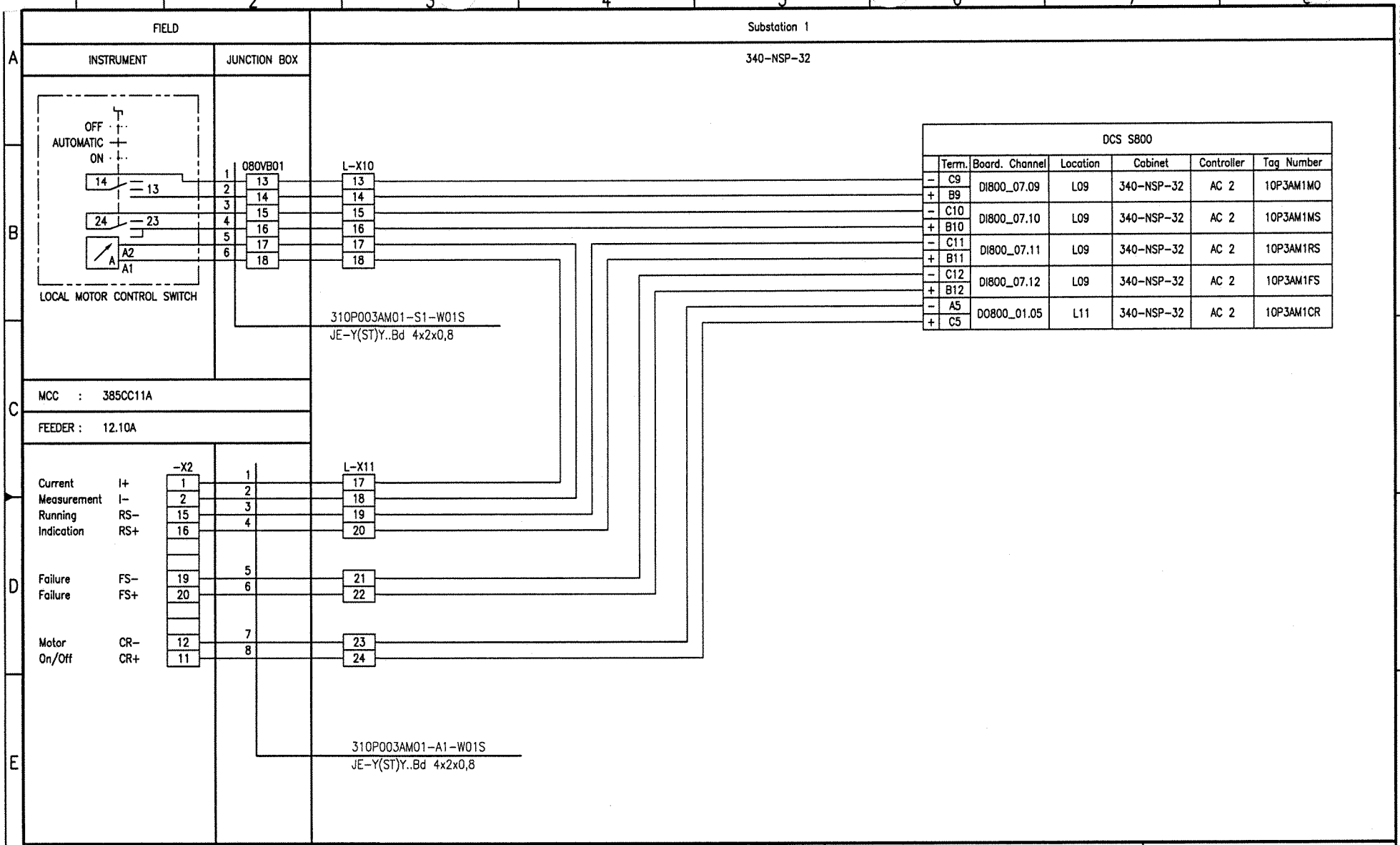

Document-ID-BAR-Code

Rev.	Date	Name (Drawn/Prepared)	Date	Name (Checked)	Date	Name (Approved)	Description	Acc. Code
01	20.09.06	Hie Hie	20.09.06	Heuer	20.09.06	Heuer	AS BUILT	

Pro. Unit	TON	Cat. Code	Acc. Code	Status
Con. Unit	Type of Document: DH	Order No.	Scale	Tot. Sheets

	Date	Name
Drawn	10.03.2005	Hielscher
Prepared	10.03.2005	Hohmann
Checked	10.03.2005	Heuer
Approved	10.03.2005	Heuer

Code: UAN 01-3040 | Document ID UD-EL-G00-FS-0001 | Part | Rev. 01 | Group

Uhde

All rights reserved © Uhde GmbH

AMMONIA / UREA PROJECT SUEZ II

Designation: Wiring diagram 310P003AM01

Store Location: Server \\p013040\013040-ADA
Store Location: Folder \Ei-ET\DH_el-wiring-diag\
Store Name 01-3040_310P003AM01_000_01.dwg

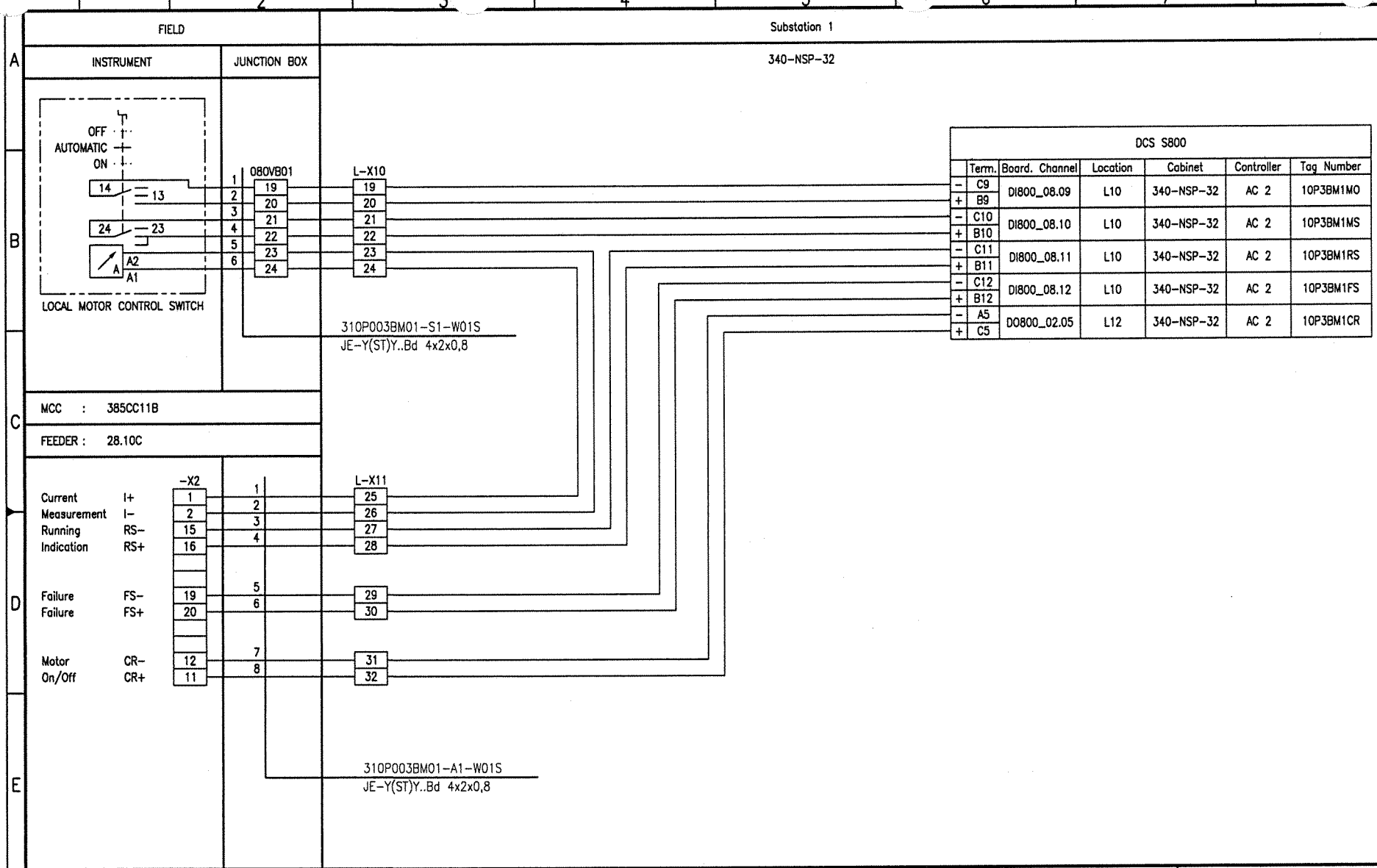

Document-ID-BAR-Code

Rev.	Date	Name (Drawn/Prepared)	Date	Name (Checked)	Date	Name (Approved)	Description	Acc. Code
01	20.09.06	Hie Hie	20.09.06	Heuer	20.09.06	Heuer	AS BUILT	

UAN	Document ID	Part	Rev.	Group
01-3040	UD-EL-G00-FS-0001		01	

Code

Uhde

All rights reserved © Uhde GmbH

Pro. Unit	TON	Cat. Code	Acc. Code	Status
Con. Unit	Type of Document: DH	Order No.	Scale	Tot. Sheets

	Date	Name
Drawn	10.03.2005	Hielscher
Prepared	10.03.2005	Hohmann
Checked	10.03.2005	Heuer
Approved	10.03.2005	Heuer

AMMONIA / UREA PROJECT SUEZ II

Designation
Wiring diagram
310P003BM01

Store Location: Server \\p013040\013040-ADA
Store Location: Folder \EI-ET\DH_el-wiring-diag\
Store Name 01-3040_310P003BM01_000_01.dwg

ISO A3

BORDER-A3_013040.dwg / AG0A3_013040.dwg / 17.05.2004

CONTENTS

Loop Index (S 800 MOTORS) Processunit 320
CO2 Compression

CO2 Compression

Tag No.	Rev.	Crossreference: See	Remarks	File No.
320K001-M01	01			
320MT02-M01	01			
320P001AM01	01			
320P001BM01	01			
320P005AM01	01			
320P005BM01	01			
320U001-EH1	01			
320U001-EH2	01			
320U001-M01	01			
320U001-M02	01			
320U001-M03	01			

I:\Ei-ET\DH_el-wiring-diag\01-3040_Wiring_diagrams_coversheet_01.doc

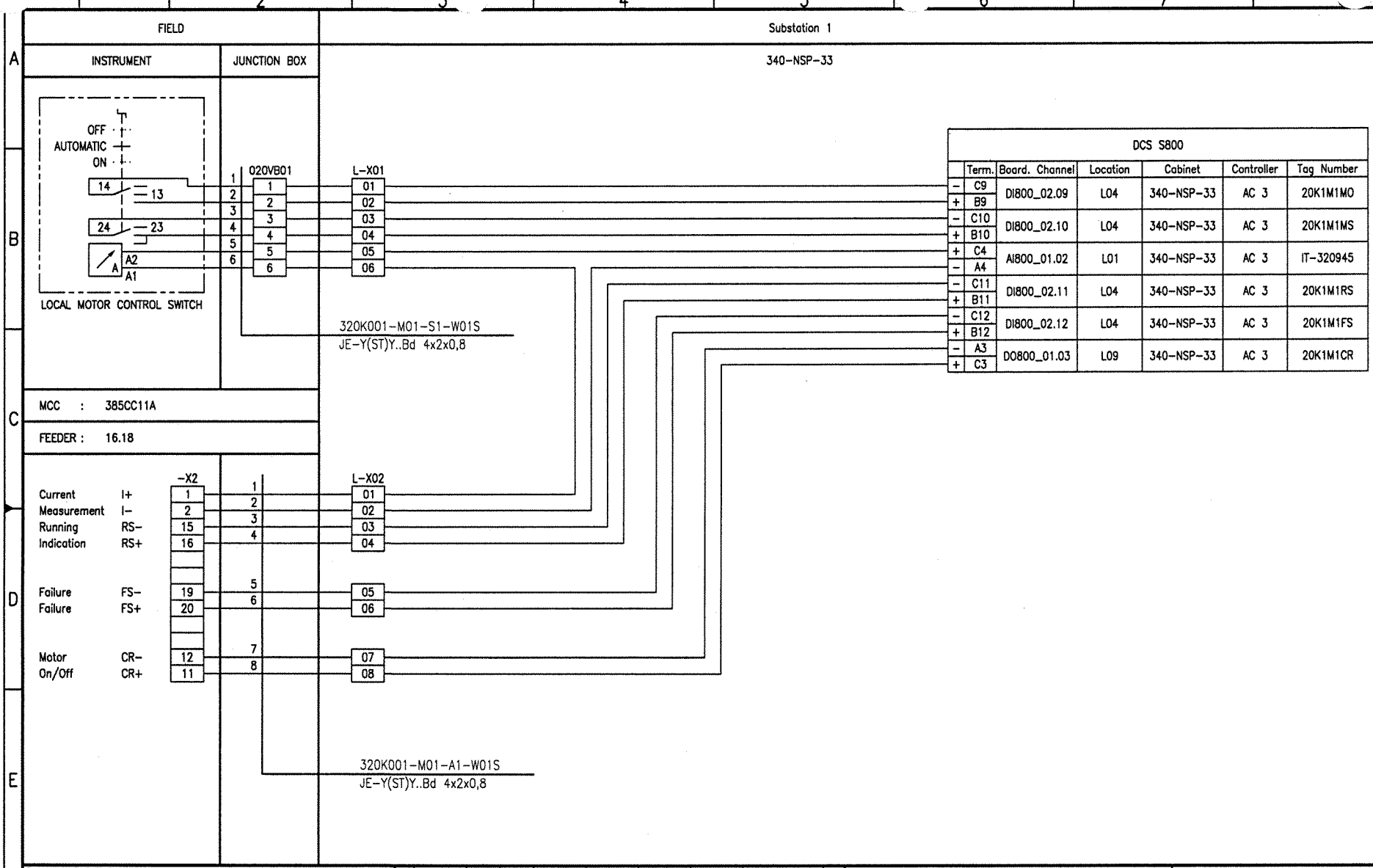

Document-ID-BAR-Code	Rev.	Date	Name (Drawn/Prepared)	Date	Name (Checked)	Date	Name (Approved)	Description	Acc. Code
	01	20.09.06	Hie Hie	20.09.06	Heuer	20.09.06	Heuer	AS BUILT	

UAN	Document ID	Part	Rev.	Group
01-3040	UD-EL-G00-FS-0001		01	

Code

Uhde

All rights reserved © Uhde GmbH

Pro. Unit	TON	Cat. Code	Acc. Code	Status
Con. Unit	Type of Document: DH	Order No.	Scale	Tot. Sheets

	Date	Name
Drawn	10.03.2005	Hielscher
Prepared	10.03.2005	Hohmann
Checked	10.03.2005	Heuer
Approved	10.03.2005	Heuer

AMMONIA / UREA PROJECT SUEZ II

Designation
Wiring diagram
320K001-M01

Store Location: Server \\p013040\013040-ADA
Store Location: Folder \EI-ET\DH_el-wiring-diag\
Store Name 01-3040_320K001-M01_000_01.dwg

ISO A3

BORDER-A3_013040.dwg / A3D3A3_013040.dwg / 17.05.2004

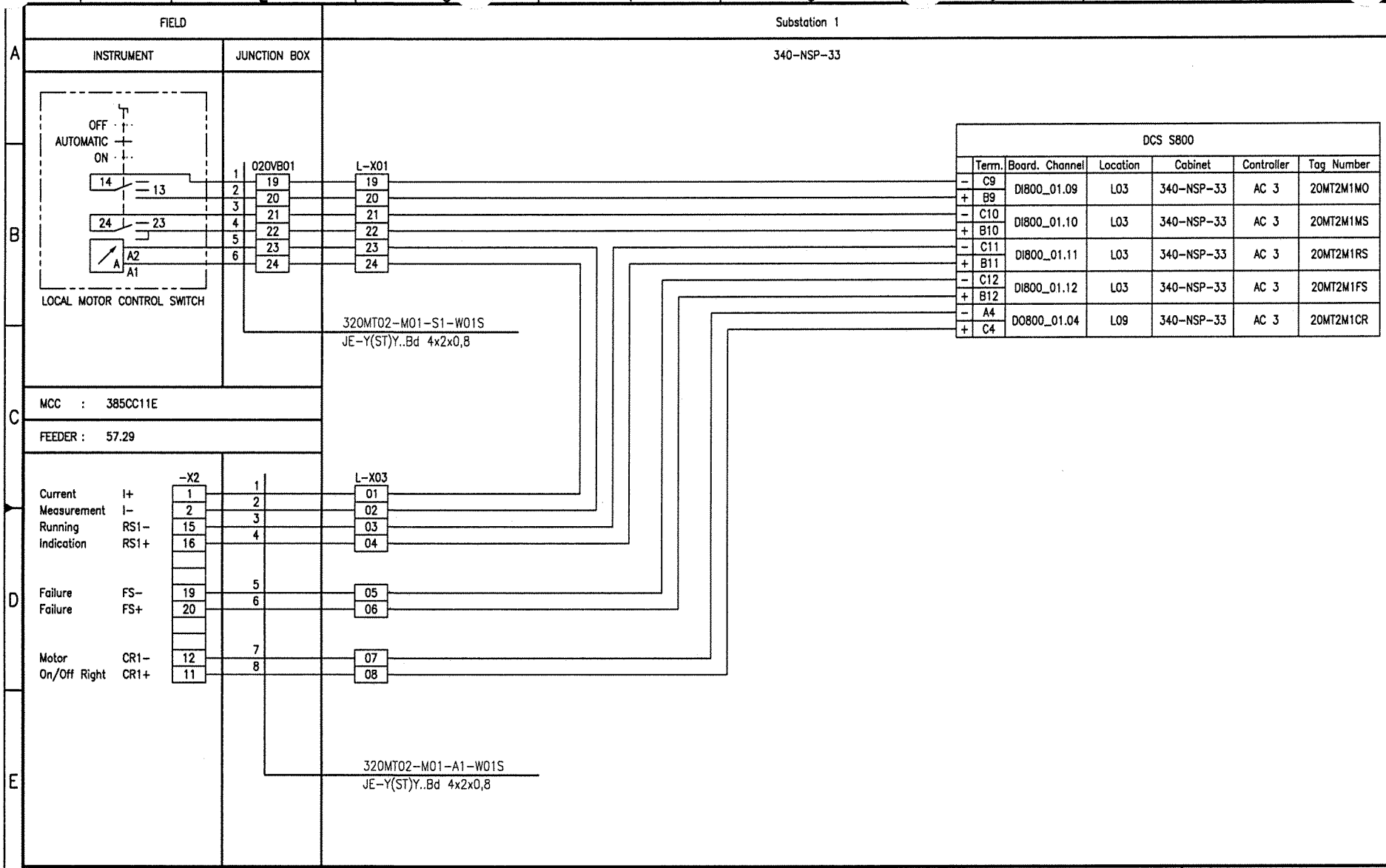

Document-ID-BAR-Code

Rev.	Date	Name (Drawn/Prepared)	Date	Name (Checked)	Date	Name (Approved)	Description	Acc. Code
01	20.09.06	Hie Hie	20.09.06	Heuer	20.09.06	Heuer	AS BUILT	

UAN	Document ID	Part	Rev.	Group
01-3040	UD-EL-G00-FS-0001		01	

Code

Uhde

All rights reserved © Uhde GmbH

Pro. Unit	TON	Cat. Code	Acc. Code	Status
Con. Unit	Type of Document: DH	Order No.	Scale	Tot. Sheets

	Date	Name
Drawn	10.03.2005	Hielscher
Prepared	10.03.2005	Hohmann
Checked	10.03.2005	Heuer
Approved	10.03.2005	Heuer

AMMONIA / UREA PROJECT SUEZ II

Designation
Wiring diagram
320MT02-M01

Store Location: Server \\p013040\013040-ADA
Store Location: Folder \EI-ET\DH_el-wiring-diag\
Store Name 01-3040_320MT02-M01_000_01.dwg

ISO A3

BORDER-A3_013040.dwg / A003A3_013040.dwg / 17.05.2004

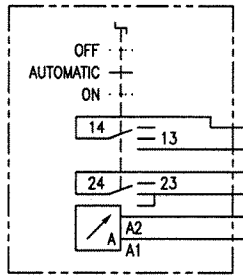

LOCAL MOTOR CONTROL SWITCH

FIELD | Substation 1

INSTRUMENT | JUNCTION BOX | 340-NSP-33

020VB11

L-X06

320P001AM01-S1-W01S
JE-Y(ST)Y..Bd 4x2x0,8

MCC : 385CC11A

FEEDER : 12.10D

-X2

L-X03

		-X2		L-X03
Current Measurement	I+	1	1	09
	I-	2	2	10
Running Indication	RS1-	15	3	11
	RS1+	16	4	12
Failure	FS-	19	5	13
Failure	FS+	20	6	14
Motor On/Off Right	CR1-	12	7	15
	CR1+	11	8	16

320P001AM01-A1-W01S
JE-Y(ST)Y..Bd 4x2x0,8

DCS S800

	Term.	Board. Channel	Location	Cabinet	Controller	Tag Number
-	C5	DI800_03.05	L05	340-NSP-33	AC 3	20P1AM1MO
+	B5					
-	C6	DI800_03.06	L05	340-NSP-33	AC 3	20P1AM1MS
+	B6					
-	C7	DI800_03.07	L05	340-NSP-33	AC 3	20P1AM1RS
+	B7					
-	C8	DI800_03.08	L05	340-NSP-33	AC 3	20P1AM1FS
+	B8					
-	A1	D0800_01.01	L09	340-NSP-33	AC 3	20P1AM1CR
+	C1					

Document-ID-BAR-Code

Rev.	Date	Name	Date	Name	Date	Name	Description	Acc. Code
01	20.09.06	Hie	20.09.06	Heuer	20.09.06	Heuer	AS BUILT	
	Drawn/Prepared		Checked		Approved			

UAN	Document ID	Part	Rev.	Group
01-3040	UD-EL-G00-FS-0001		01	

Code

Uhde

All rights reserved © Uhde GmbH

Pro. Unit	TON	Cat. Code	Acc. Code	Status

Con. Unit	Type of Document	Order No.	Scale	Tot. Sheets
	DH			

	Date	Name
Drawn	10.03.2005	Hielscher
Prepared	10.03.2005	Hohmann
Checked	10.03.2005	Heuer
Approved	10.03.2005	Heuer

AMMONIA / UREA PROJECT SUEZ II

Designation
Wiring diagram
320P001AM01

Store Location: Server
\\p013040\013040-ADA

Store Location: Folder
\EI-ET\DH_el-wiring-diag\

Store Name
01-3040_320P001AM01_000_01.dwg

BORDER-A3_013040.dwg / A03A3_013040.dwg / 17.05.2004

ISO A3

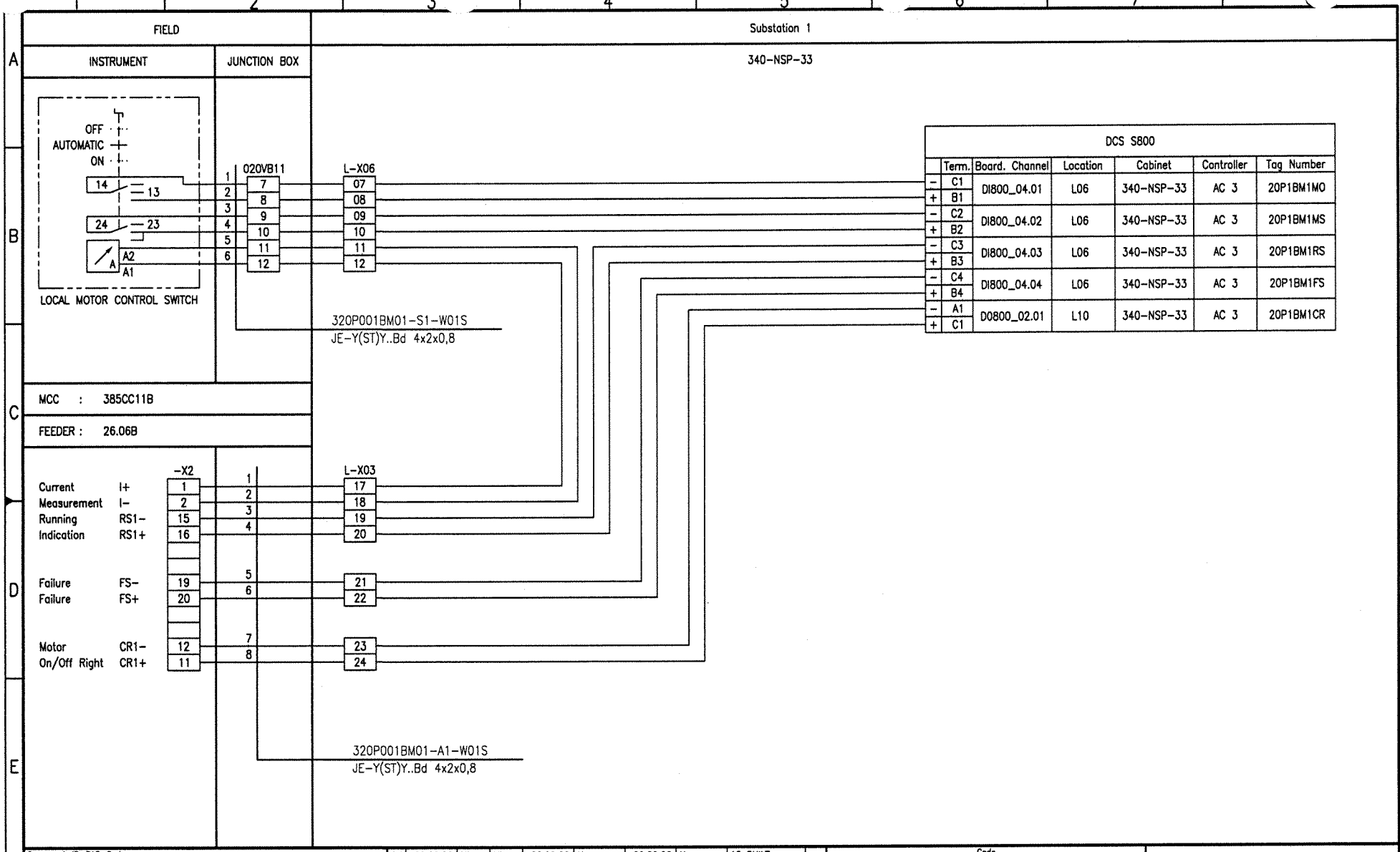

Document-ID-BAR-Code

Rev.	Date	Name (Drawn/Prepared)	Date	Name (Checked)	Date	Name (Approved)	Description	Acc. Code
01	20.09.06	Hie Hie	20.09.06	Heuer	20.09.06	Heuer	AS BUILT	

Pro. Unit	TON	Cat. Code	Acc. Code	Status
Con. Unit	Type of Document: DH	Order No.	Scale	Tot. Sheets

	Date	Name
Drawn	10.03.2005	Hielscher
Prepared	10.03.2005	Hohmann
Checked	10.03.2005	Heuer
Approved	10.03.2005	Heuer

Store Location: Server \\p013040\013040-ADA
Store Location: Folder \EJ-ET\DH_el-wiring-diag\
Store Name 01-3040_320P001BM01_000_01.dwg

Code: UAN 01-3040 | Document ID UD-EL-G00-FS-0001 | Part | Rev. 01 | Group

Uhde

All rights reserved © Uhde GmbH

AMMONIA / UREA PROJECT SUEZ II

Designation: Wiring diagram 320P001BM01

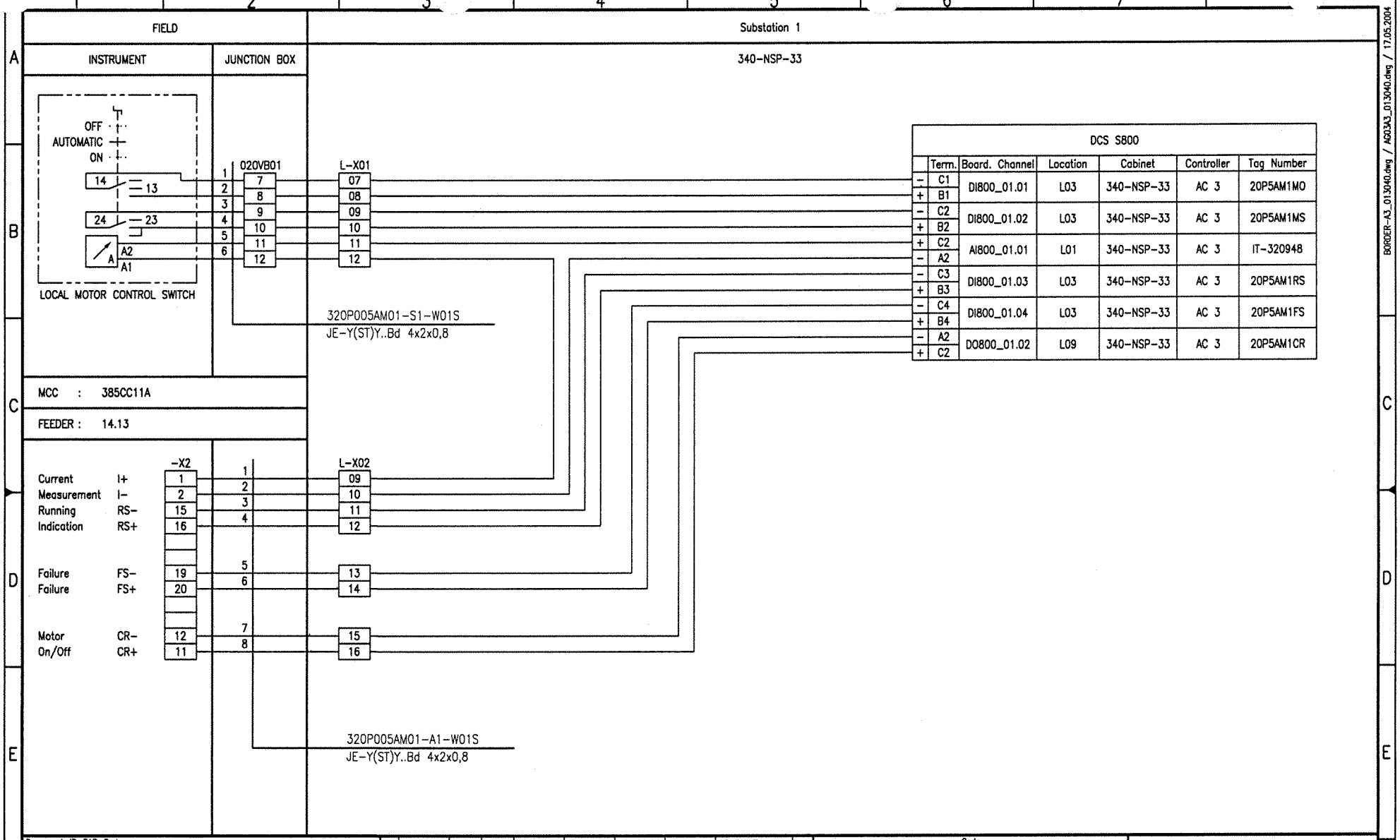

Document-ID-BAR-Code

Rev.	Date	Name	Date	Name	Date	Name	Description	Acc. Code
01	20.09.06	Hie	20.09.06	Heuer	20.09.06	Heuer	AS BUILT	
	Drawn/Prepared		Checked		Approved			

UAN	Document ID	Part	Rev.	Group
01-3040	UD-EL-G00-FS-0001		01	

Code

Uhde

All rights reserved © Uhde GmbH

Pro. Unit	TON	Cat. Code	Acc. Code	Status

Con. Unit	Type of Document	Order No.	Scale	Tot. Sheets
	DH			

	Date	Name
Drawn	10.03.2005	Hielscher
Prepared	10.03.2005	Hohmann
Checked	10.03.2005	Heuer
Approved	10.03.2005	Heuer

AMMONIA / UREA
PROJECT
SUEZ II

Designation
Wiring diagram
320P005AM01

Store Location: Server
\\p013040\013040-ADA

Store Location: Folder
\EI-ET\DH_el-wiring-diag\

Store Name
01-3040_320P005AM01_000_01.dwg

ISO A3

BORDER-A3_013040.dwg / A0303_013040.dwg / 17.05.2004

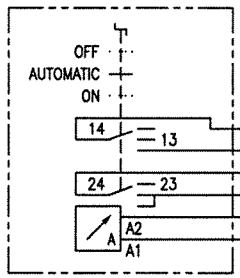

LOCAL MOTOR CONTROL SWITCH

FIELD | Substation 1

INSTRUMENT | JUNCTION BOX | 340-NSP-33

020VB01: 1–6 → 13, 14, 15, 16, 17, 18

L-X01: 13, 14, 15, 16, 17, 18

320P005BM01-S1-W01S
JE-Y(ST)Y..Bd 4x2x0,8

MCC : 385CC11B

FEEDER : 27.29

-X2

		-X2		L-X02
Current	I+	1	1	17
Measurement	I-	2	2	18
Running	RS-	15	3	19
Indication	RS+	16	4	20
Failure	FS-	19	5	21
Failure	FS+	20	6	22
Motor	CR-	12	7	23
On/Off	CR+	11	8	24

320P005BM01-A1-W01S
JE-Y(ST)Y..Bd 4x2x0,8

DCS S800

	Term.	Board. Channel	Location	Cabinet	Controller	Tag Number
-	C1	DI800_02.01	L04	340-NSP-33	AC 3	20P5BM1MO
+	B1					
-	C2	DI800_02.02	L04	340-NSP-33	AC 3	20P5BM1MS
+	B2					
+	C2	AI800_02.01	L02	340-NSP-33	AC 3	IT-320949
-	A2					
-	C3	DI800_02.03	L04	340-NSP-33	AC 3	20P5BM1RS
+	B3					
-	C4	DI800_02.04	L04	340-NSP-33	AC 3	20P5BM1FS
+	B4					
-	A2	DO800_02.02	L10	340-NSP-33	AC 3	20P5BM1CR
+	C2					

Document-ID-BAR-Code

Rev.	Date	Name (Drawn/Prepared)	Date	Name (Checked)	Date	Name (Approved)	Description	Acc. Code
01	20.09.06	Hie Hie	20.09.06	Heuer	20.09.06	Heuer	AS BUILT	

UAN	Document ID	Part	Rev.	Group
01-3040	UD-EL-G00-FS-0001		01	

Code

Uhde

All rights reserved © Uhde GmbH

Pro. Unit	TON	Cat. Code	Acc. Code	Status
Con. Unit	Type of Document: DH	Order No.	Scale	Tot. Sheets

	Date	Name
Drawn	10.03.2005	Hielscher
Prepared	10.03.2005	Hohmann
Checked	10.03.2005	Heuer
Approved	10.03.2005	Heuer

AMMONIA / UREA PROJECT SUEZ II

Designation
Wiring diagram
320P005BM01

Store Location: Server \\p013040\013040-ADA
Store Location: Folder \EI-ET\DH_el-wiring-diag\
Store Name 01-3040_320P005BM01_000_01.dwg

ISO A3

BORDER-A3_013040.dwg / AG0343_013040.dwg / 17.05.2004

FIELD		Substation 1
INSTRUMENT	JUNCTION BOX	340-NSP-33

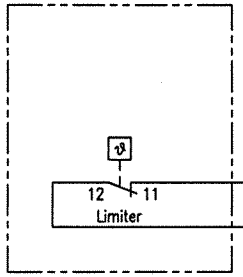

TEMPERATURE LIMITER
TSH 320078

MCC : 385CC11A

FEEDER : 14.06A

		-X2
Limiter	LI	4
Limiter	LI	3
Failure	FS-	19
Failure	FS+	20
Heating	CR-	12
Start	CR+	11

	L-X02
1	25
2	26
3	27
4	28

320U001-EH1-A1-W01S
JE-Y(ST)Y..Bd 4x2x0,8

DCS S800

	Term.	Board. Channel	Location	Cabinet	Controller	Tag Number
-	C13	DI800_01.13	L03	340-NSP-33	AC 3	20U1EH1FS
+	B13					
-	A6	DO800_01.06	L09	340-NSP-33	AC 3	20U1EH1CR
+	C6					

Document-ID-BAR-Code

Rev.	Date	Name	Drawn/Prepared	Date	Name	Checked	Date	Name	Approved	Description	Acc. Code
01	20.09.06	Hie	Hie	20.09.06	Heuer		20.09.06	Heuer		AS BUILT	

UAN	Code: Document ID	Part	Rev.	Group
01-3040	UD-EL-G00-FS-0001		01	

Uhde

All rights reserved © Uhde GmbH

Pro. Unit	TON	Cat. Code	Acc. Code	Status

Con. Unit	Type of Document	Order No.	Scale	Tot. Sheets
	DH			

	Date	Name
Drawn	10.03.2005	Hielscher
Prepared	10.03.2005	Hohmann
Checked	10.03.2005	Heuer
Approved	10.03.2005	Heuer

AMMONIA / UREA
PROJECT
SUEZ II

Designation
Wiring diagram
320U001-EH1

Store Location: Server
\\p013040\013040-ADA

Store Location: Folder
\EI-ET\DH_el-wiring-diag\

Store Name
01-3040_320U001-EH1_000_01.dwg

ISO A3

BORDER-A3_013040.dwg / AQ0343_013040.dwg / 17.05.2004

FIELD		Substation 1
INSTRUMENT	JUNCTION BOX	340-NSP-33

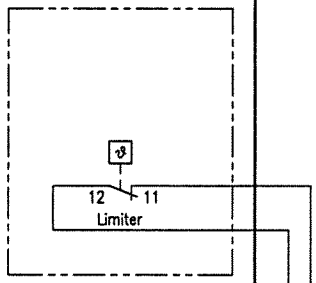

MCC : 385CC11B

FEEDER : 26.06A

		-X2		L-X02
Limiter	LI	4		
Limiter	LI	3		
Failure	FS-	19	1	29
Failure	FS+	20	2	30
Heating	CR-	12	3	31
Start	CR+	11	4	32

320U001-EH2-A1-W01S
JE-Y(ST)Y..Bd 4x2x0,8

DCS S800						
	Term.	Board. Channel	Location	Cabinet	Controller	Tag Number
-	C13	DI800_02.13	L04	340-NSP-33	AC 3	20U1EH2FS
+	B13					
-	A6	DO800_02.06	L10	340-NSP-33	AC 3	20U1EH2CR
+	C6					

Document-ID-BAR-Code

Rev.	Date	Name (Drawn/Prepared)	Date	Name (Checked)	Date	Name (Approved)	Description	Acc. Code
01	20.09.06	Hie Hie	20.09.06	Heuer	20.09.06	Heuer	AS BUILT	

UAN	Document ID	Part	Rev.	Group
01-3040	UD-EL-G00-FS-0001		01	

Code

Uhde

All rights reserved © Uhde GmbH

Pro. Unit	TON	Cat. Code	Acc. Code	Status
Con. Unit	Type of Document: DH	Order No.	Scale	Tot. Sheets

	Date	Name
Drawn	10.03.2005	Hielscher
Prepared	10.03.2005	Hohmann
Checked	10.03.2005	Heuer
Approved	10.03.2005	Heuer

AMMONIA / UREA
PROJECT
SUEZ II

Designation
Wiring diagram
320U001-EH2

Store Location: Server
\\p013040\013040-ADA

Store Location: Folder
\EI-ET\DH_el-wiring-diag\

Store Name
01-3040_320U001-EH2_000_01.dwg

ISO A3

BORDER-A3_013040.dwg / A03A3_013040.dwg / 17.05.2004

FIELD | Substation 1

INSTRUMENT | JUNCTION BOX | 340-NSP-33

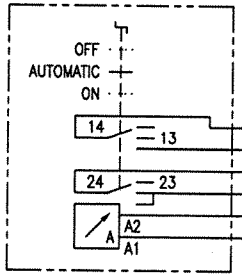

LOCAL MOTOR CONTROL SWITCH

020VB07

L-X04

320U001-M01-S1-W01S
JE-Y(ST)Y..Bd 4x2x0,8

MCC : 385CC11A

FEEDER : 16.23

-X2

L-X05

		-X2		L-X05
Current Measurement	I+	1	1	01
	I-	2	2	02
Running Indication	RS-	15	3	03
	RS+	16	4	04
Failure	FS-	19	5	05
Failure	FS+	20	6	06
Motor On/Off	CR-	12	7	07
	CR+	11	8	08

320U001-M01-A1-W01S
JE-Y(ST)Y..Bd 4x2x0,8

DCS S800

	Term.	Board. Channel	Location	Cabinet	Controller	Tag Number
-	C5	DI800_02.05	L04	340-NSP-33	AC 3	20U1M1MO
+	B5					
-	C6	DI800_02.06	L04	340-NSP-33	AC 3	20U1M1MS
+	B6					
+	C6	AI800_01.03	L01	340-NSP-33	AC 3	IT-320946
-	A6					
-	C7	DI800_02.07	L04	340-NSP-33	AC 3	20U1M1RS
+	B7					
-	C8	DI800_02.08	L04	340-NSP-33	AC 3	20U1M1FS
+	B8					
-	A3	DO800_02.03	L10	340-NSP-33	AC 3	20U1M1CR
+	C3					

Document-ID-BAR-Code

Rev.	Date	Name (Drawn/Prepared)	Date	Name (Checked)	Date	Name (Approved)	Description	Acc. Code
01	20.09.06	Hie Hie	20.09.06	Heuer	20.09.06	Heuer	AS BUILT	

UAN	Code: Document ID	Part	Rev.	Group
01-3040	UD-EL-G00-FS-0001		01	

Uhde

All rights reserved © Uhde GmbH

Pro. Unit	TON	Cat. Code	Acc. Code	Status

Con. Unit	Type of Document	Order No.	Scale	Tot. Sheets
	DH			

	Date	Name
Drawn	10.03.2005	Hielscher
Prepared	10.03.2005	Hohmann
Checked	10.03.2005	Heuer
Approved	10.03.2005	Heuer

AMMONIA / UREA PROJECT SUEZ II

Designation
Wiring diagram
320U001-M01

Store Location: Server
\\p013040\013040-ADA

Store Location: Folder
\EI-ET\DH_el-wiring-diag\

Store Name
01-3040_320U001-M01_000_01.dwg

ISO A3

BORDER-A3_013040.dwg / AG03A3_013040.dwg / 17.05.2004

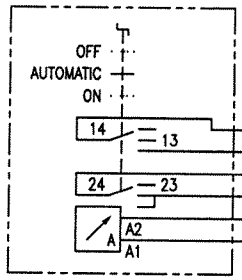

LOCAL MOTOR CONTROL SWITCH

FIELD

INSTRUMENT | JUNCTION BOX

Substation 1

340-NSP-33

020VB07

L-X04

320U001-M02-S1-W01S
JE-Y(ST)Y..Bd 4x2x0,8

MCC : 385CC11B

FEEDER : 25.18

-X2

L-X05

		-X2		L-X05
Current Measurement	I+	1	1	09
	I-	2	2	10
Running Indication	RS-	15	3	11
	RS+	16	4	12
Failure Failure	FS-	19	5	13
	FS+	20	6	14
Motor On/Off	CR-	12	7	15
	CR+	11	8	16

320U001-M02-A1-W01S
JE-Y(ST)Y..Bd 4x2x0,8

DCS S800

	Term.	Board. Channel	Location	Cabinet	Controller	Tag Number
-	C5	DI800_01.05	L03	340-NSP-33	AC 3	20U1M2MO
+	B5					
-	C6	DI800_01.06	L03	340-NSP-33	AC 3	20U1M2MS
+	B6					
+	C4	AI800_02.02	L02	340-NSP-33	AC 3	IT-320947
-	A4					
-	C7	DI800_01.07	L03	340-NSP-33	AC 3	20U1M2RS
+	B7					
-	C8	DI800_01.08	L03	340-NSP-33	AC 3	20U1M2FS
+	B8					
-	A5	DO800_01.05	L09	340-NSP-33	AC 3	20U1M2CR
+	C5					

Document-ID-BAR-Code

Rev.	Date	Name (Drawn/Prepared)	Date	Name (Checked)	Date	Name (Approved)	Description	Acc. Code
01	20.09.06	Hie Hie	20.09.06	Heuer	20.09.06	Heuer	AS BUILT	

UAN	Code: Document ID	Part	Rev.	Group
01-3040	UD-EL-G00-FS-0001		01	

Uhde

All rights reserved © Uhde GmbH

Pro. Unit	TON	Cat. Code	Acc. Code	Status
Con. Unit	Type of Document: DH	Order No.	Scale	Tot. Sheets

	Date	Name
Drawn	10.03.2005	Hielscher
Prepared	10.03.2005	Hohmann
Checked	10.03.2005	Heuer
Approved	10.03.2005	Heuer

AMMONIA / UREA PROJECT SUEZ II

Designation: Wiring diagram 320U001-M02

Store Location: Server \\p013040\013040-ADA

Store Location: Folder \Ei-ET\DH_el-wiring-diag\

Store Name: 01-3040_320U001-M02_000_01.dwg

ISO A3

BORDER-A3_013040.dwg / AG03A3_013040.dwg / 17.05.2004

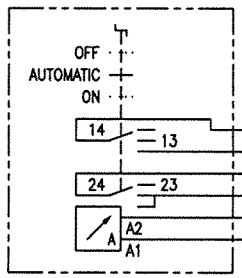

LOCAL MOTOR CONTROL SWITCH

FIELD | Substation 1

INSTRUMENT | JUNCTION BOX | 340-NSP-33

020VB07

L-X04

320U001-M03-S1-W01S
JE-Y(ST)Y..Bd 4x2x0,8

MCC : 385CC11E

FEEDER : 45.10A

-X2

L-X05

		-X2		L-X05
Current Measurement	I+	1	1	17
	I-	2	2	18
Running Indication	RS-	15	3	19
	RS+	16	4	20
Failure	FS-	19	5	21
Failure	FS+	20	6	22
Motor On/Off	CR-	12	7	23
	CR+	11	8	24

320U001-M03-A1-W01S
JE-Y(ST)Y..Bd 4x2x0,8

DCS S800

	Term.	Board. Channel	Location	Cabinet	Controller	Tag Number
-	C1	DI800_03.01	L05	340-NSP-33	AC 3	20U1M3MO
+	B1					
-	C2	DI800_03.02	L05	340-NSP-33	AC 3	20U1M3MS
+	B2					
-	C3	DI800_03.03	L05	340-NSP-33	AC 3	20U1M3RS
+	B3					
-	C4	DI800_03.04	L05	340-NSP-33	AC 3	20U1M3FS
+	B4					
-	A5	DO800_02.05	L10	340-NSP-33	AC 3	20U1M3CR
+	C5					

Document-ID-BAR-Code

Rev.	Date	Name (Drawn/Prepared)	Date	Name (Checked)	Date	Name (Approved)	Description	Acc. Code
01	20.09.06	Hie Hie	20.09.06	Heuer	20.09.06	Heuer	AS BUILT	

UAN	Document ID	Part	Rev.	Group
01-3040	UD-EL-G00-FS-0001		01	

Code

Uhde

All rights reserved © Uhde GmbH

Pro. Unit	TON	Cat. Code	Acc. Code	Status
Con. Unit	Type of Document: DH	Order No.	Scale	Tot. Sheets

	Date	Name
Drawn	10.03.2005	Hielscher
Prepared	10.03.2005	Hohmann
Checked	10.03.2005	Heuer
Approved	10.03.2005	Heuer

AMMONIA / UREA PROJECT SUEZ II

Designation
Wiring diagram
320U001-M03

Store Location: Server \\p013040\013040-ADA
Store Location: Folder \EI-ET\DH_el-wiring-diag\
Store Name 01-3040_320U001-M03_000_01.dwg

ISO A3

BORDER-A3_013040.dwg / AG03A3_013040.dwg / 17.05.2004

CONTENTS

Loop Index (S 800 MOTORS) Processunit 321
Ammonia Pumping

Tag No.	Rev.	Crossreference: See	Remarks	File No.
321P002AM01	01			
321P002AM02	01			
321P002AM03	01			
321P002BM01	01			
321P002BM02	01			
321P002BM03	01			

I:\Ej-ET\DH_el-wiring-diag\01-3040_Wiring_diagrams_coversheet_01.doc

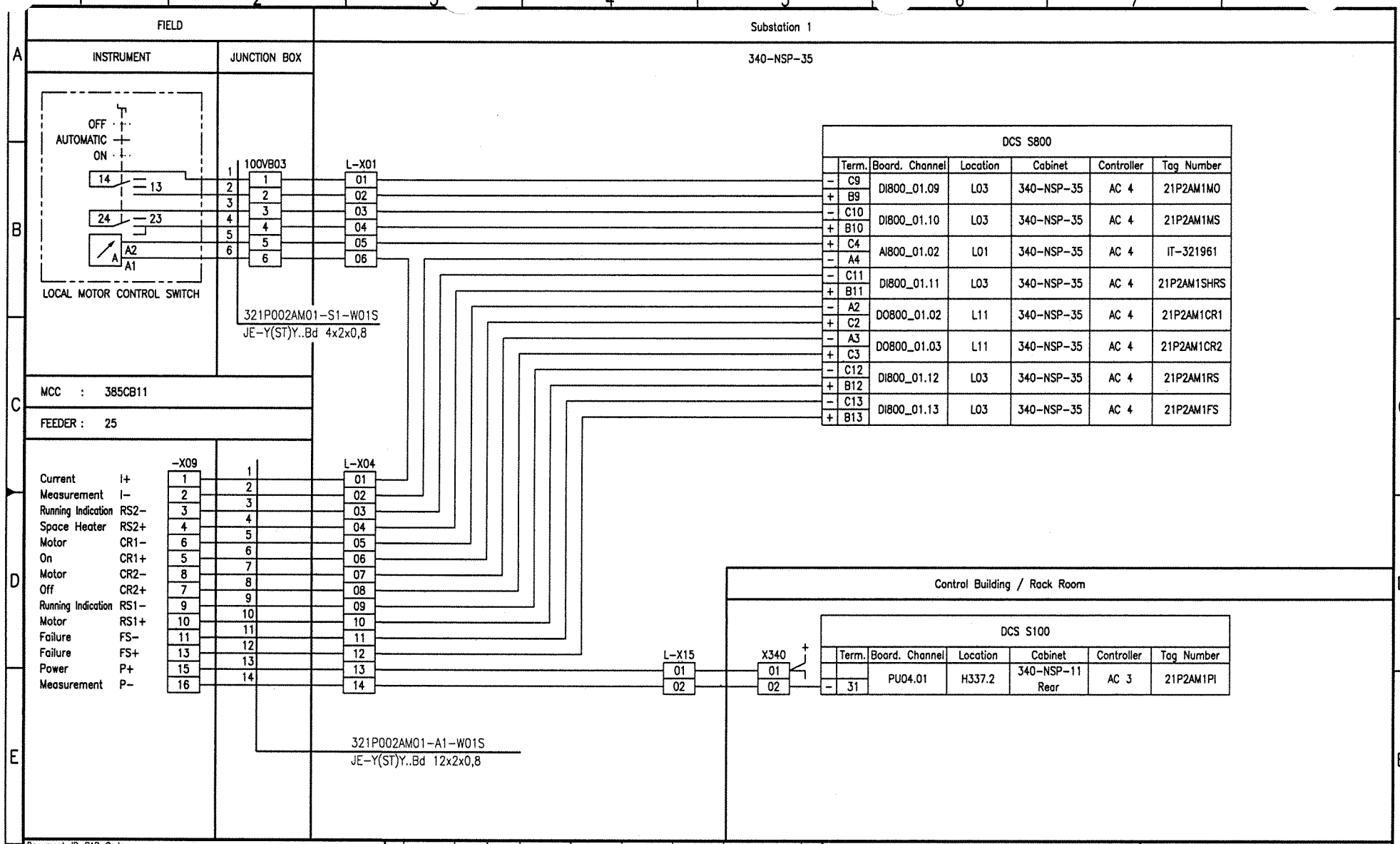
FIELD
Substation 1
INSTRUMENT
JUNCTION BOX
340-NSP-35
OFF
AUTOMATIC
ON
14
13
24
23
A2
A1
LOCAL MOTOR CONTROL SWITCH
100VB03
L-X01
321P002AM01-S1-W01S
JE-Y(ST)Y..Bd 4x2x0,8
MCC : 385CB11
FEEDER : 25
-X09
L-X04
Current I+
Measurement I-
Running Indication RS2-
Space Heater RS2+
Motor CR1-
On CR1+
Motor CR2-
Off CR2+
Running Indication RS1-
Motor RS1+
Failure FS-
Failure FS+
Power P+
Measurement P-
321P002AM01-A1-W01S
JE-Y(ST)Y..Bd 12x2x0,8
L-X15
X340
Control Building / Rack Room
DCS S800
Term. Board. Channel Location Cabinet Controller Tag Number
C9 B9 DI800_01.09 L03 340-NSP-35 AC 4 21P2AM1MO
C10 B10 DI800_01.10 L03 340-NSP-35 AC 4 21P2AM1MS
C4 A4 AI800_01.02 L01 340-NSP-35 AC 4 IT-321961
C11 B11 DI800_01.11 L03 340-NSP-35 AC 4 21P2AM1SHRS
A2 C2 DO800_01.02 L11 340-NSP-35 AC 4 21P2AM1CR1
A3 C3 DO800_01.03 L11 340-NSP-35 AC 4 21P2AM1CR2
C12 B12 DI800_01.12 L03 340-NSP-35 AC 4 21P2AM1RS
C13 B13 DI800_01.13 L03 340-NSP-35 AC 4 21P2AM1FS
DCS S100
Term. Board. Channel Location Cabinet Controller Tag Number
31 PU04.01 H337.2 340-NSP-11 Rear AC 3 21P2AM1PI
Document-ID-BAR-Code
01 20.09.06 Hie Hie 20.09.06 Heuer 20.09.06 Heuer AS BUILT
Rev. Date Name Date Name Date Name Description Acc. Code
Drawn/Prepared Checked Approved
UAN 01-3040
Code
Document ID UD-EL-G00-FS-0001
Port
Rev. 01
Group
Uhde
All rights reserved © Uhde GmbH
Pro. Unit TON Cat. Code Acc. Code Status
Con. Unit Type of Document DH Order No. Scale Tot. Sheets
Drawn 04.04.2005 Hielscher
Prepared 04.04.2005 Hohmann
Checked 04.04.2005 Heuer
Approved 04.04.2005 Heuer
AMMONIA / UREA PROJECT SUEZ II
Designation
Wiring diagram 321P002AM01
Store Location: Server \\p013040\013040-ADA
Store Location: Folder \EI-ET\DH_el-wiring-diag\
Store Name 01-3040_321P002AM01_000_01.dwg
ISO A3
BORDER-A3_013040.dwg / AG03A3_013040.dwg / 17.05.2004

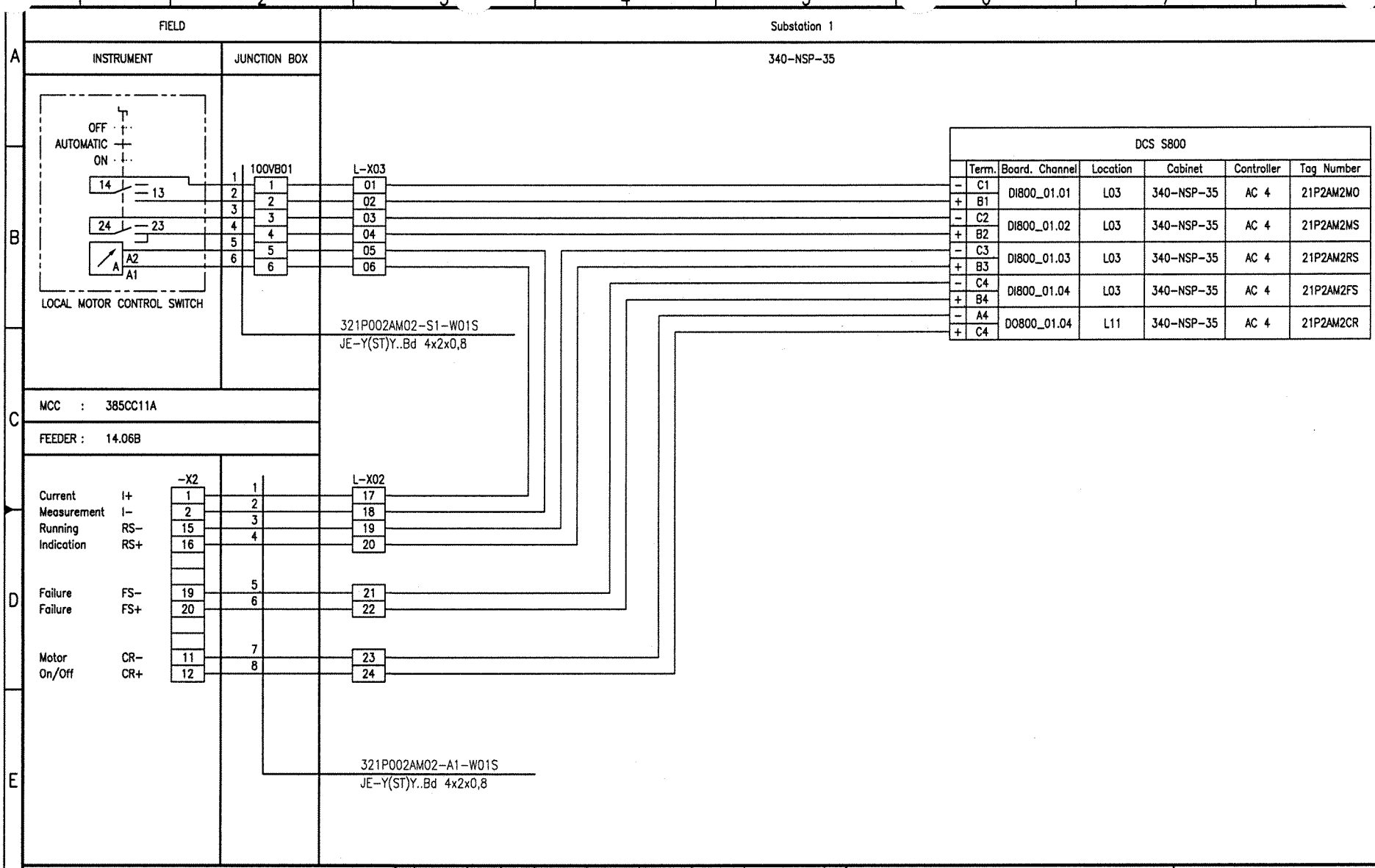

Document-ID-BAR-Code

Rev.	Date	Name	Date	Name	Date	Name	Description	Acc. Code
	Drawn/Prepared		Checked		Approved			
01	20.09.06	Hie Hie	20.09.06	Heuer	20.09.06	Heuer	AS BUILT	

Pro. Unit	TON	Cat. Code	Acc. Code	Status
Con. Unit	Type of Document: DH	Order No.	Scale	Tot. Sheets

	Date	Name
Drawn	04.04.2005	Hielscher
Prepared	04.04.2005	Hohmann
Checked	04.04.2005	Heuer
Approved	04.04.2005	Heuer

Code: UAN 01-3040 | Document ID UD-EL-G00-FS-0001 | Part | Rev. 01 | Group

Uhde

All rights reserved © Uhde GmbH

AMMONIA / UREA PROJECT SUEZ II

Designation: Wiring diagram 321P002AM02

Store Location: Server \\p013040\013040-ADA
Store Location: Folder \Ei-ET\DH_el-wiring-diag\
Store Name 01-3040_321P002AM02_000_01.dwg

ISO A3

BORDER-A3_013040.dwg / AG03A3_013040.dwg / 17.05.2004

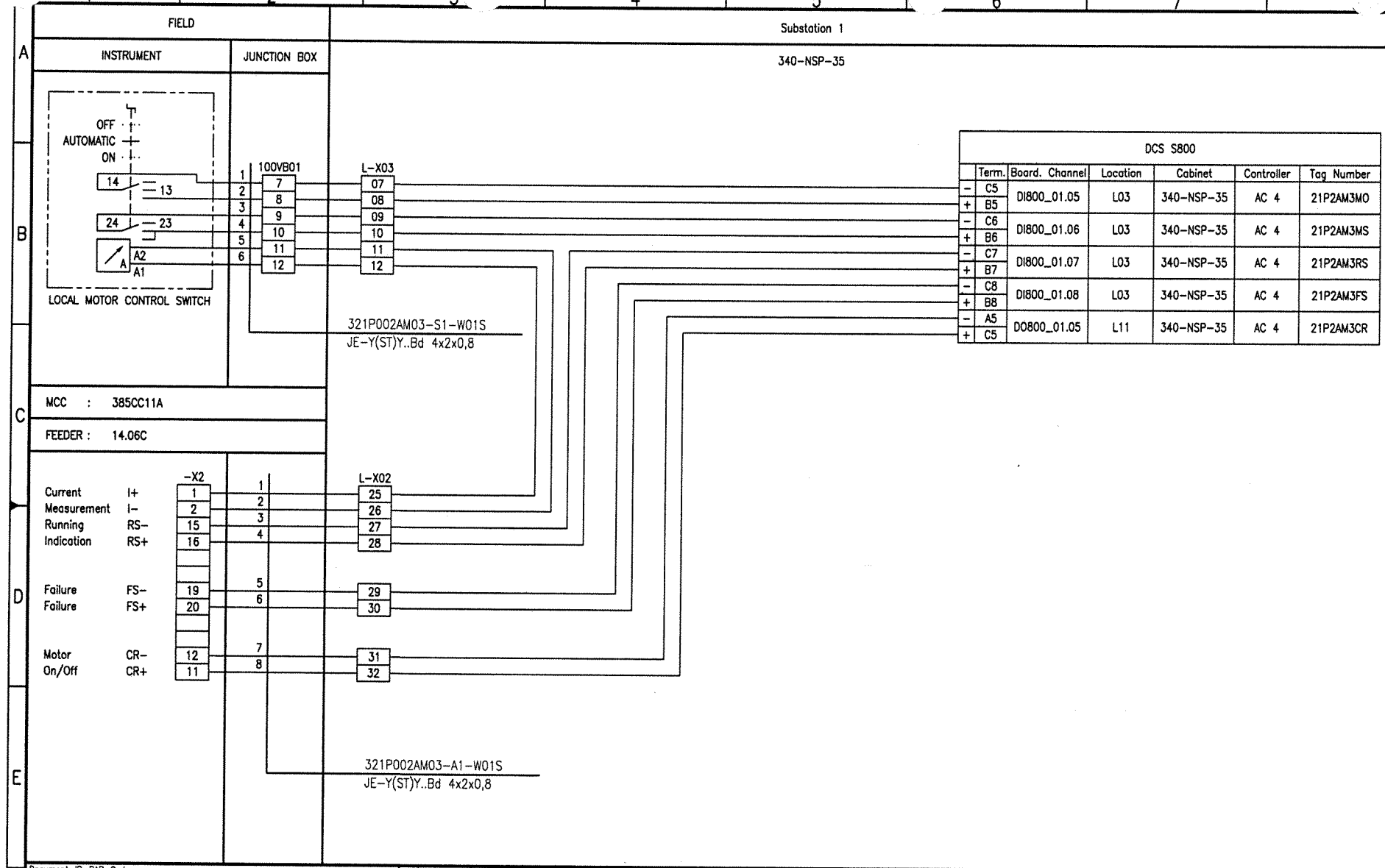

Document-ID-BAR-Code

Rev.	Date	Name (Drawn/Prepared)	Date	Name (Checked)	Date	Name (Approved)	Description	Acc. Code
01	20.09.06	Hie Hie	20.09.06	Heuer	20.09.06	Heuer	AS BUILT	

UAN 01-3040 | Code: Document ID UD-EL-G00-FS-0001 | Part | Rev. 01 | Group

Uhde

All rights reserved © Uhde GmbH

Pro. Unit | TON | Cat. Code | Acc. Code | Status

Con. Unit | Type of Document DH | Order No. | Scale | Tot. Sheets

	Date	Name
Drawn	04.04.2005	Hielscher
Prepared	04.04.2005	Hohmann
Checked	04.04.2005	Heuer
Approved	04.04.2005	Heuer

AMMONIA / UREA PROJECT SUEZ II

Designation: Wiring diagram 321P002AM03

Store Location: Server \\p013040\013040-ADA

Store Location: Folder \EI-ET\DH_el-wiring-diag\

Store Name 01-3040_321P002AM03_000_01.dwg

ISO A3

BORDER-A3_013040.dwg / AG03A3_013040.dwg / 17.05.2004

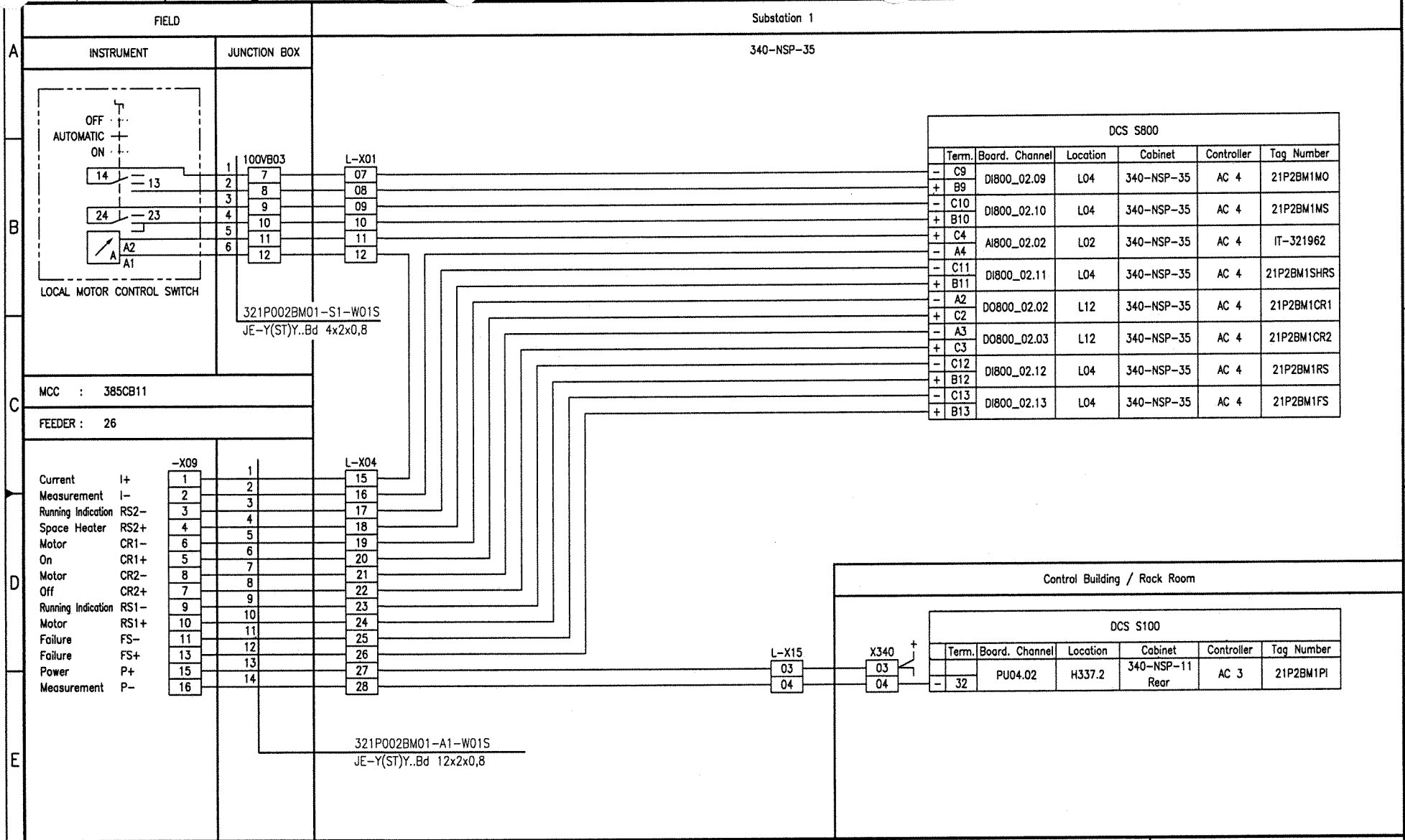

DCS S800						
	Term.	Board. Channel	Location	Cabinet	Controller	Tag Number
-	C9	DI800_02.09	L04	340-NSP-35	AC 4	21P2BM1MO
+	B9					
-	C10	DI800_02.10	L04	340-NSP-35	AC 4	21P2BM1MS
+	B10					
+	C4	AI800_02.02	L02	340-NSP-35	AC 4	IT-321962
-	A4					
-	C11	DI800_02.11	L04	340-NSP-35	AC 4	21P2BM1SHRS
+	B11					
-	A2	DO800_02.02	L12	340-NSP-35	AC 4	21P2BM1CR1
+	C2					
-	A3	DO800_02.03	L12	340-NSP-35	AC 4	21P2BM1CR2
+	C3					
-	C12	DI800_02.12	L04	340-NSP-35	AC 4	21P2BM1RS
+	B12					
-	C13	DI800_02.13	L04	340-NSP-35	AC 4	21P2BM1FS
+	B13					

DCS S100						
	Term.	Board. Channel	Location	Cabinet	Controller	Tag Number
-	32	PU04.02	H337.2	340-NSP-11 Rear	AC 3	21P2BM1PI

Document-ID-BAR-Code

Rev.	Date	Name (Drawn/Prepared)	Date	Name (Checked)	Date	Name (Approved)	Description	Acc. Code
01	20.09.06	Hie Hie	20.09.06	Heuer	20.09.06	Heuer	AS BUILT	

Code				
UAN	Document ID	Part	Rev.	Group
01-3040	UD-EL-G00-FS-0001		01	

Uhde

All rights reserved © Uhde GmbH

Pro. Unit	TON	Cat. Code	Acc. Code	Status
Con. Unit	Type of Document: DH	Order No.	Scale	Tot. Sheets

	Date	Name
Drawn	04.04.2005	Hielscher
Prepared	04.04.2005	Hohmann
Checked	04.04.2005	Heuer
Approved	04.04.2005	Heuer

AMMONIA / UREA PROJECT SUEZ II

Designation
Wiring diagram
321P002BM01

Store Location: Server \\p013040\013040-ADA
Store Location: Folder \EI-ET\DH_el-wiring-diag\
Store Name 01-3040_321P002BM01_000_01.dwg

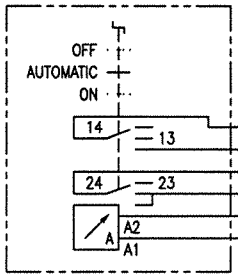

LOCAL MOTOR CONTROL SWITCH

FIELD | Substation 1

INSTRUMENT | JUNCTION BOX | 340-NSP-35

100VB03: 1, 2, 3, 4, 5, 6 — 13, 14, 15, 16, 17, 18

L-X01: 13, 14, 15, 16, 17, 18

321P002BM02-S1-W01S
JE-Y(ST)Y..Bd 4x2x0,8

MCC : 385CC11B

FEEDER : 26.06C

		-X2		L-X02
Current Measurement	I+	1	1	01
	I-	2	2	02
Running Indication	RS-	15	3	03
	RS+	16	4	04
Failure	FS-	19	5	05
Failure	FS+	20	6	06
Motor On/Off	CR-	12	7	07
	CR+	11	8	08

321P002BM02-A1-W01S
JE-Y(ST)Y..Bd 4x2x0,8

DCS S800

	Term.	Board. Channel	Location	Cabinet	Controller	Tag Number
-	C1	DI800_02.01	L04	340-NSP-35	AC 4	21P2BM2MO
+	B1					
-	C2	DI800_02.02	L04	340-NSP-35	AC 4	21P2BM2MS
+	B2					
-	C3	DI800_02.03	L04	340-NSP-35	AC 4	21P2BM2RS
+	B3					
-	C4	DI800_02.04	L04	340-NSP-35	AC 4	21P2BM2FS
+	B4					
-	A4	DO800_02.04	L12	340-NSP-35	AC 4	21P2BM2CR
+	C4					

Document-ID-BAR-Code

Rev.	Date	Name (Drawn/Prepared)	Date	Name (Checked)	Date	Name (Approved)	Description	Acc. Code
01	20.09.06	Hie	20.09.06	Heuer	20.09.06	Heuer	AS BUILT	

UAN	Document ID	Part	Rev.	Group
01-3040	UD-EL-G00-FS-0001		01	

Code

Pro. Unit | TON | Cat. Code | Acc. Code | Status

Con. Unit | Type of Document: DH | Order No. | Scale | Tot. Sheets

	Date	Name
Drawn	04.04.2005	Hielscher
Prepared	04.04.2005	Hohmann
Checked	04.04.2005	Heuer
Approved	04.04.2005	Heuer

AMMONIA / UREA PROJECT SUEZ II

Uhde

All rights reserved © Uhde GmbH

Designation
Wiring diagram
321P002BM02

Store Location: Server \\p013040\013040-ADA
Store Location: Folder \EI-ET\DH_el-wiring-diag\
Store Name 01-3040_321P002BM02_000_01.dwg

ISO A3

BORDER-A3_013040.dwg / AG03A3_013040.dwg / 17.05.2004

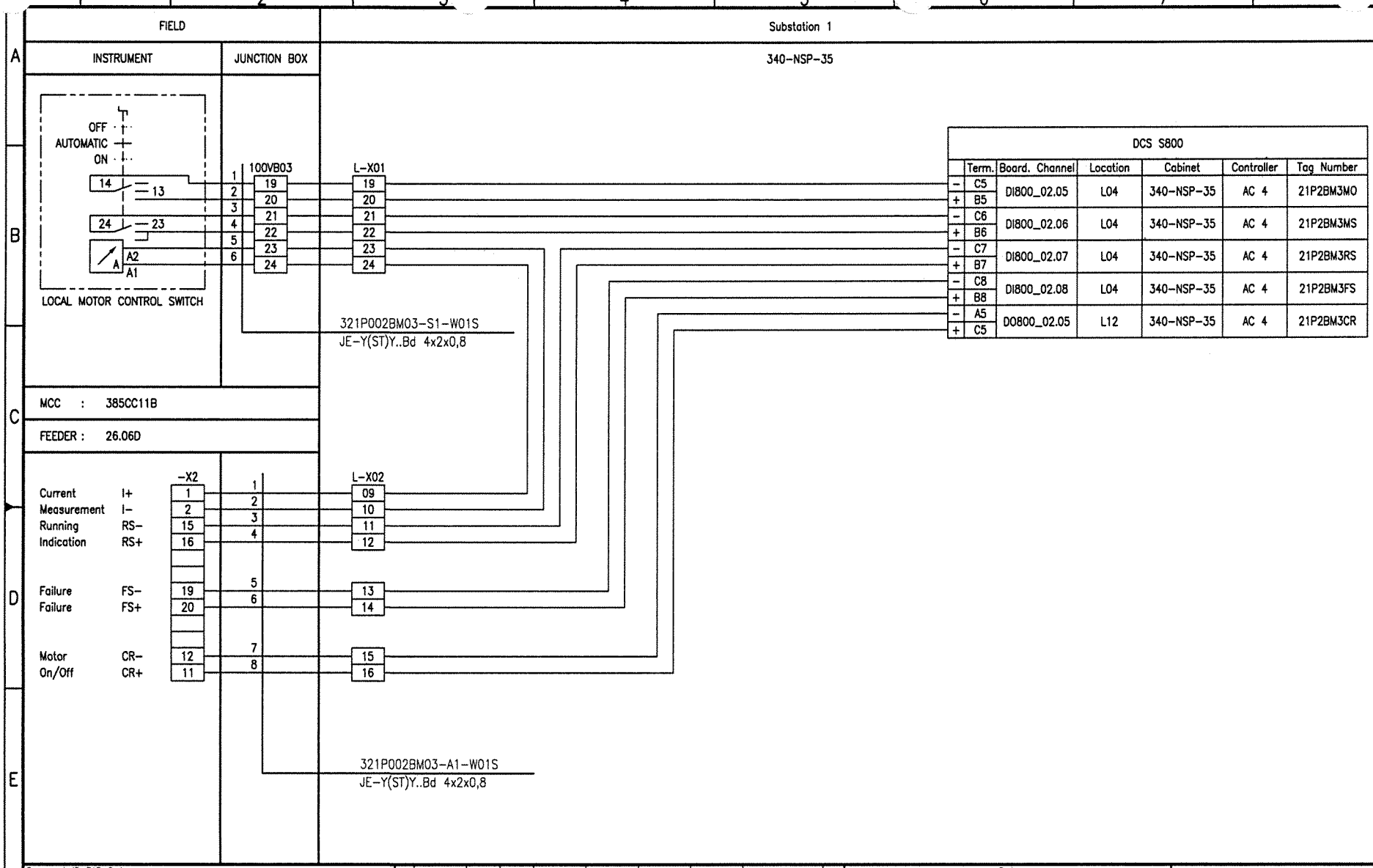

Document-ID-BAR-Code

Rev.	Date	Name (Drawn/Prepared)	Date	Name (Checked)	Date	Name (Approved)	Description	Acc. Code
01	20.09.06	Hie Hie	20.09.06	Heuer	20.09.06	Heuer	AS BUILT	

UAN	Document ID	Part	Rev.	Group
01-3040	UD-EL-G00-FS-0001		01	

Code

Uhde

All rights reserved © Uhde GmbH

Pro. Unit	TON	Cat. Code	Acc. Code	Status

Con. Unit	Type of Document	Order No.	Scale	Tot. Sheets
	DH			

	Date	Name
Drawn	04.04.2005	Hielscher
Prepared	04.04.2005	Hohmann
Checked	04.04.2005	Heuer
Approved	04.04.2005	Heuer

AMMONIA / UREA PROJECT SUEZ II

Designation
Wiring diagram
321P002BM03

Store Location: Server
\\p013040\013040-ADA

Store Location: Folder
\Ei-ET\DH_el-wiring-diag\

Store Name
01-3040_321P002BM03_000_01.dwg

ISO A3

BORDER-A3_013040.dwg / A03X3_013040.dwg / 17.05.2004

CONTENTS

Loop Index (S 800 MOTORS) Processunit 322
Synthesis

Tag No.	Rev.	Crossreference: See	Remarks	File No.
322P002AM01	01			
322P002BM01	01			
322Y001P51-M01	01			

I:\Et-ETTDH_el-wiring-diag\01-3040_Wiring_diagrams_coversheet_01.doc

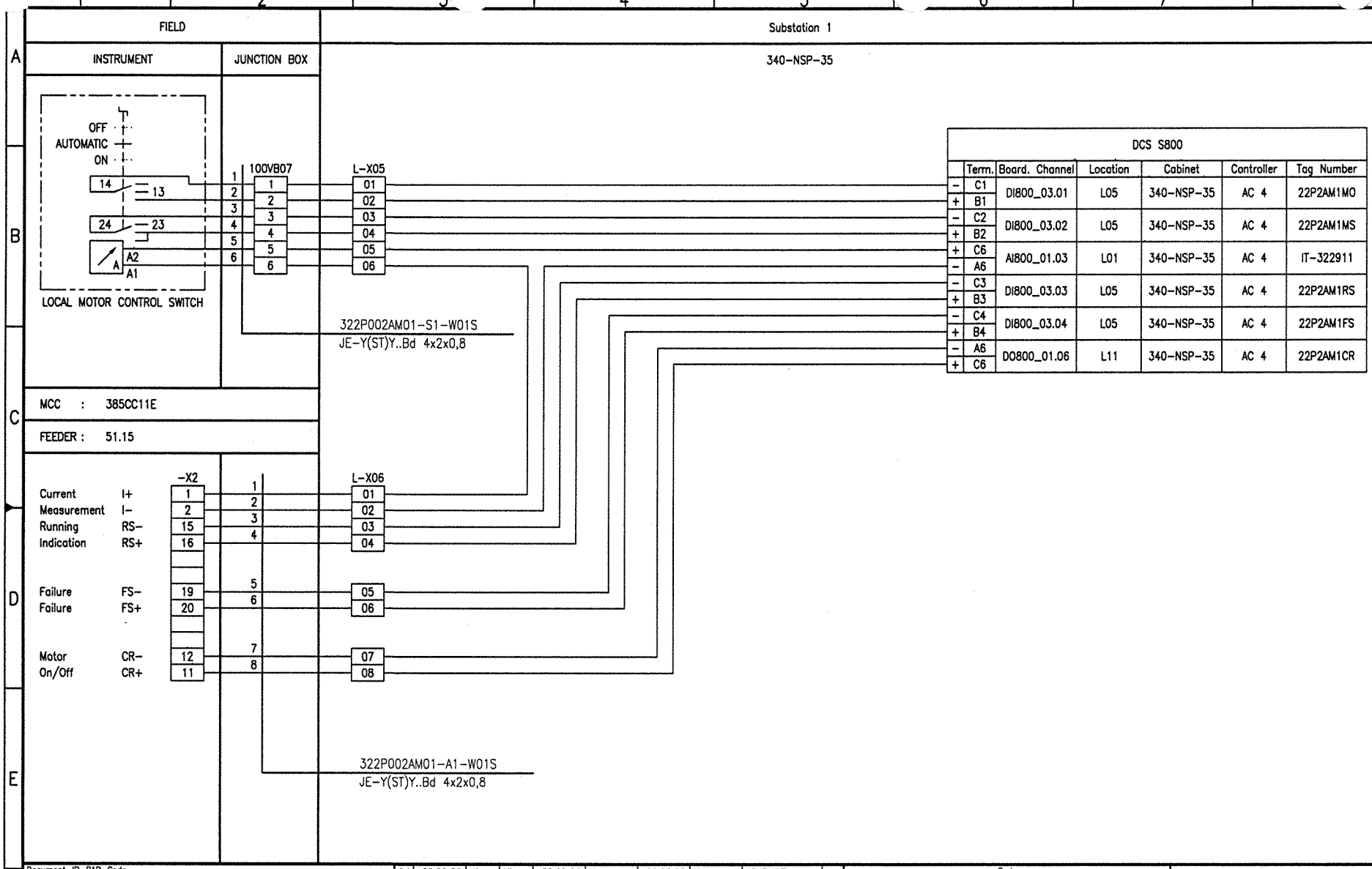

Document-ID-BAR-Code

Rev.	Date	Name (Drawn/Prepared)	Date	Name (Checked)	Date	Name (Approved)	Description	Acc. Code
01	20.09.06	Hie Hie	20.09.06	Heuer	20.09.06	Heuer	AS BUILT	

UAN	Document ID	Part	Rev.	Group
01-3040	UD-EL-G00-FS-0001		01	

Code

Uhde

All rights reserved © Uhde GmbH

Pro. Unit	TON	Cat. Code	Acc. Code	Status
Con. Unit	Type of Document: DH	Order No.	Scale	Tot. Sheets

	Date	Name
Drawn	04.04.2005	Hielscher
Prepared	04.04.2005	Hohmann
Checked	04.04.2005	Heuer
Approved	04.04.2005	Heuer

AMMONIA / UREA PROJECT SUEZ II

Designation
Wiring diagram
322P002AM01

Store Location: Server \\p013040\013040-ADA
Store Location: Folder \EI-ET\DH_el-wiring-diag\
Store Name 01-3040_322P002AM01_000_01.dwg

ISO A3

BORDER-A3_013040.dwg / A003A3_013040.dwg / 17.05.2004

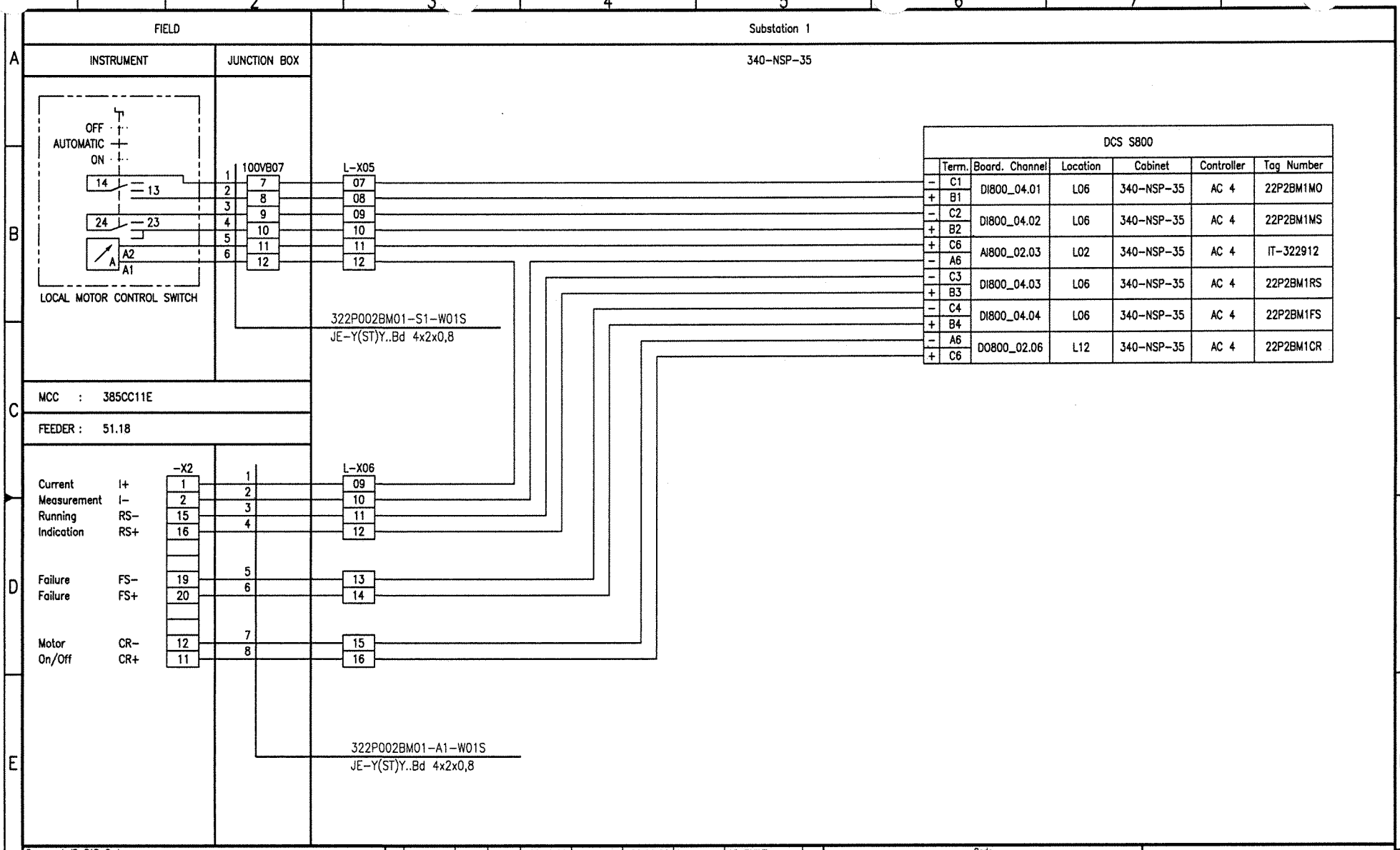

Document-ID-BAR-Code

Rev.	Date	Name	Date	Name	Date	Name	Description	Acc. Code
01	20.09.06	Hie	20.09.06	Heuer	20.09.06	Heuer	AS BUILT	
	Drawn/Prepared		Checked		Approved			

UAN	Document ID	Part	Rev.	Group
01-3040	UD-EL-G00-FS-0001		01	

Code

Uhde

All rights reserved © Uhde GmbH

Pro. Unit	TON	Cat. Code	Acc. Code	Status
Con. Unit	Type of Document: DH	Order No.	Scale	Tot. Sheets

	Date	Name
Drawn	04.04.2005	Hielscher
Prepared	04.04.2005	Hohmann
Checked	04.04.2005	Heuer
Approved	04.04.2005	Heuer

AMMONIA / UREA PROJECT SUEZ II

Designation
Wiring diagram
322P002BM01

Store Location: Server \\p013040\013040-ADA
Store Location: Folder \EI-ET\DH_el-wiring-diag\
Store Name 01-3040_322P002BM01_000_01.dwg

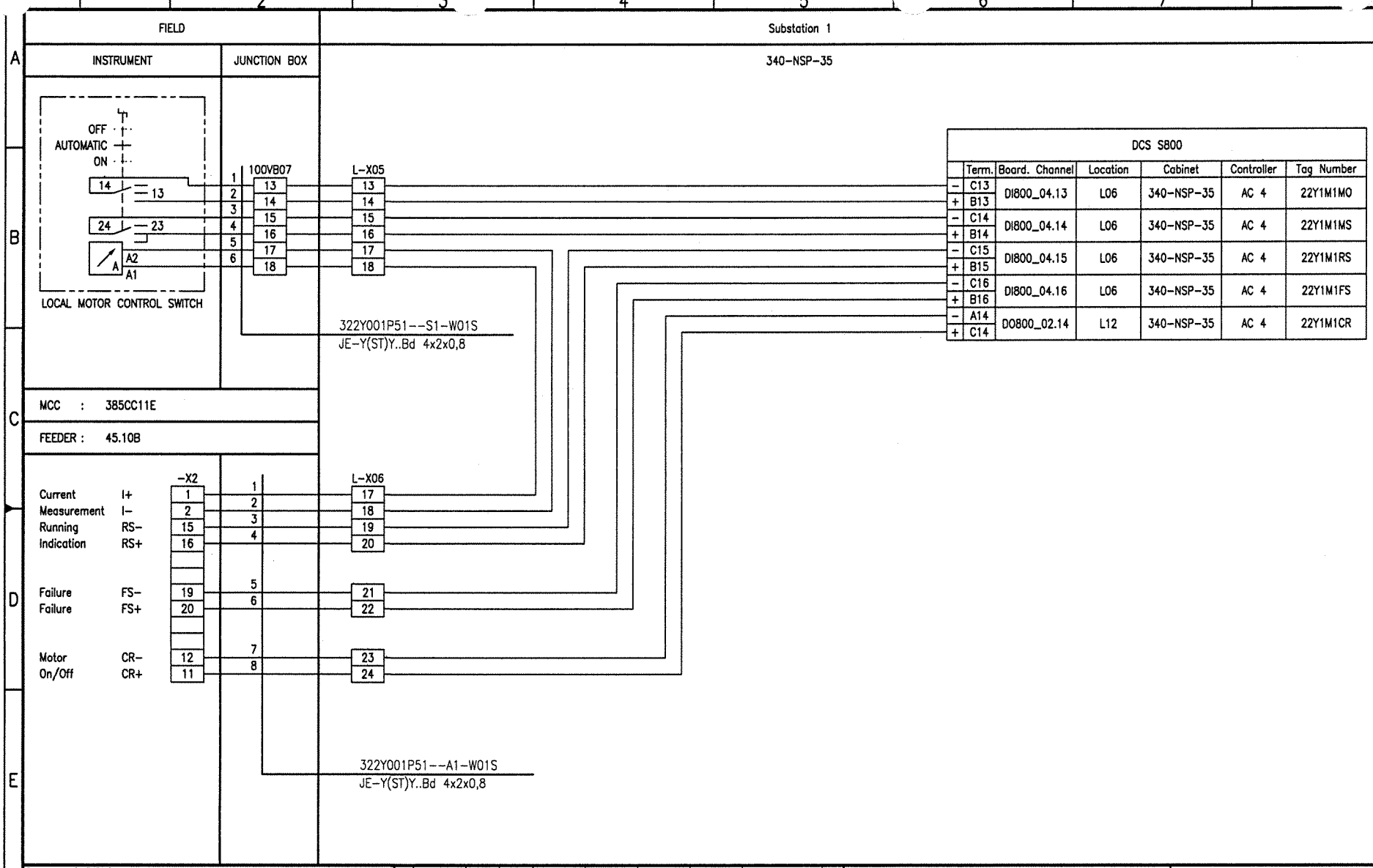

Document-ID-BAR-Code

Rev.	Date	Name	Date	Name	Date	Name	Description	Acc. Code
01	20.09.06	Hie	20.09.06	Heuer	20.09.06	Heuer	AS BUILT	
	Drawn/Prepared		Checked		Approved			

UAN	Document ID	Part	Rev.	Group
01-3040	UD-EL-G00-FS-0001		01	

Code

Uhde

All rights reserved © Uhde GmbH

Pro. Unit	TON	Cat. Code	Acc. Code	Status
Con. Unit	Type of Document: DH	Order No.	Scale	Tot. Sheets

	Date	Name
Drawn	04.04.2005	Hielscher
Prepared	04.04.2005	Hohmann
Checked	04.04.2005	Heuer
Approved	04.04.2005	Heuer

AMMONIA / UREA PROJECT SUEZ II

Designation
Wiring diagram
322Y001-M01

Store Location: Server \\p013040\013040-ADA
Store Location: Folder \EI-ET\DH_el-wiring-diag\
Store Name 01-3040_322Y001P51-M01_000_01.dwg

CONTENTS

Loop Index (S 800 MOTORS) Processunit 323
Recirculation

Tag No.	Rev.	Crossreference: See	Remarks	File No.
323P001AM01	01			
323P001AM02	01			
323P001AM03	01			
323P001BM01	01			
323P001BM02	01			
323P001BM03	01			
323P003AM01	01			
323P003BM01	01			
323P008AM01	01			
323P008BM01	01			

I:\B-ET\DH_el-wiring-diag\01-3040_Wiring_diagrams_coversheet_01.doc

FIELD | Substation 1

INSTRUMENT | JUNCTION BOX | 340-NSP-35

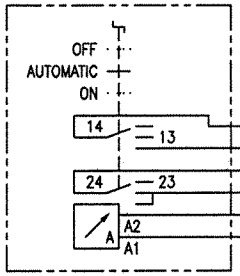

LOCAL MOTOR CONTROL SWITCH

MCC : 385CB11

FEEDER : 27

100VB02

L-X07

323P001AM01-S1-W01S
JE-Y(ST)Y..Bd 4x2x0,8

		-X09	100VB02	L-X08
Current	I+	1	1	01
Measurement	I-	2	2	02
Running Indication	RS2-	3	3	03
Space Heater	RS2+	4	4	04
Motor	CR1-	6	5	05
On	CR1+	5	6	06
Motor	CR2-	8	7	07
Off	CR2+	7	8	08
Running Indication	RS1-	9	9	09
Motor	RS1+	10	10	10
Failure	FS-	11	11	11
Failure	FS+	13	12	12
Power	P+	15	13	13
Measurement	P-	16	14	14

323P001AM01-A1-W01S
JE-Y(ST)Y..Bd 12x2x0,8

DCS S800

	Term.	Board. Channel	Location	Cabinet	Controller	Tag Number
-	C5	DI800_03.05	L05	340-NSP-35	AC 4	23P1AM1MO
+	B5					
-	C6	DI800_03.06	L05	340-NSP-35	AC 4	23P1AM1MS
+	B6					
+	C8	AI800_01.04	L01	340-NSP-35	AC 4	IT-323951
-	A8					
-	C7	DI800_03.07	L05	340-NSP-35	AC 4	23P1AM1SHRS
+	B7					
-	A7	DO800_01.07	L11	340-NSP-35	AC 4	23P1AM1CR1
+	C7					
-	A8	DO800_01.08	L11	340-NSP-35	AC 4	23P1AM1CR2
+	C8					
-	C8	DI800_03.08	L05	340-NSP-35	AC 4	23P1AM1RS
+	B8					
-	C9	DI800_03.09	L05	340-NSP-35	AC 4	23P1AM1FS
+	B9					

L-X15 05 06 — X340 05 06 +

Control Building / Rack Room

DCS S100

	Term.	Board. Channel	Location	Cabinet	Controller	Tag Number
-	33	PU04.03	H337.2	340-NSP-11 Rear	AC 3	23P1AM1PI

Document-ID-BAR-Code

Rev.	Date	Name	Date	Name	Date	Name	Description	Acc. Code
01	20.09.06	Hie	20.09.06	Heuer	20.09.06	Heuer	AS BUILT	
	Drawn/Prepared		Checked		Approved			

Pro. Unit	TON	Cat. Code	Acc. Code	Status
Con. Unit	Type of Document: DH	Order No.	Scale	Tot. Sheets

	Date	Name
Drawn	04.04.2005	Hielscher
Prepared	04.04.2005	Hohmann
Checked	04.04.2005	Heuer
Approved	04.04.2005	Heuer

Code: UAN 01-3040 | Document ID UD-EL-G00-FS-0001 | Part | Rev. 01 | Group

Uhde

All rights reserved © Uhde GmbH

AMMONIA / UREA PROJECT SUEZ II

Designation: Wiring diagram 323P001AM01

Store Location: Server \\p013040\013040-ADA
Store Location: Folder \Ei-ET\DH_el-wiring-diag\
Store Name 01-3040_323P001AM01_000_01.dwg

ISO A3

BORDER-A3_013040.dwg / A03A3_013040.dwg / 17.05.2004

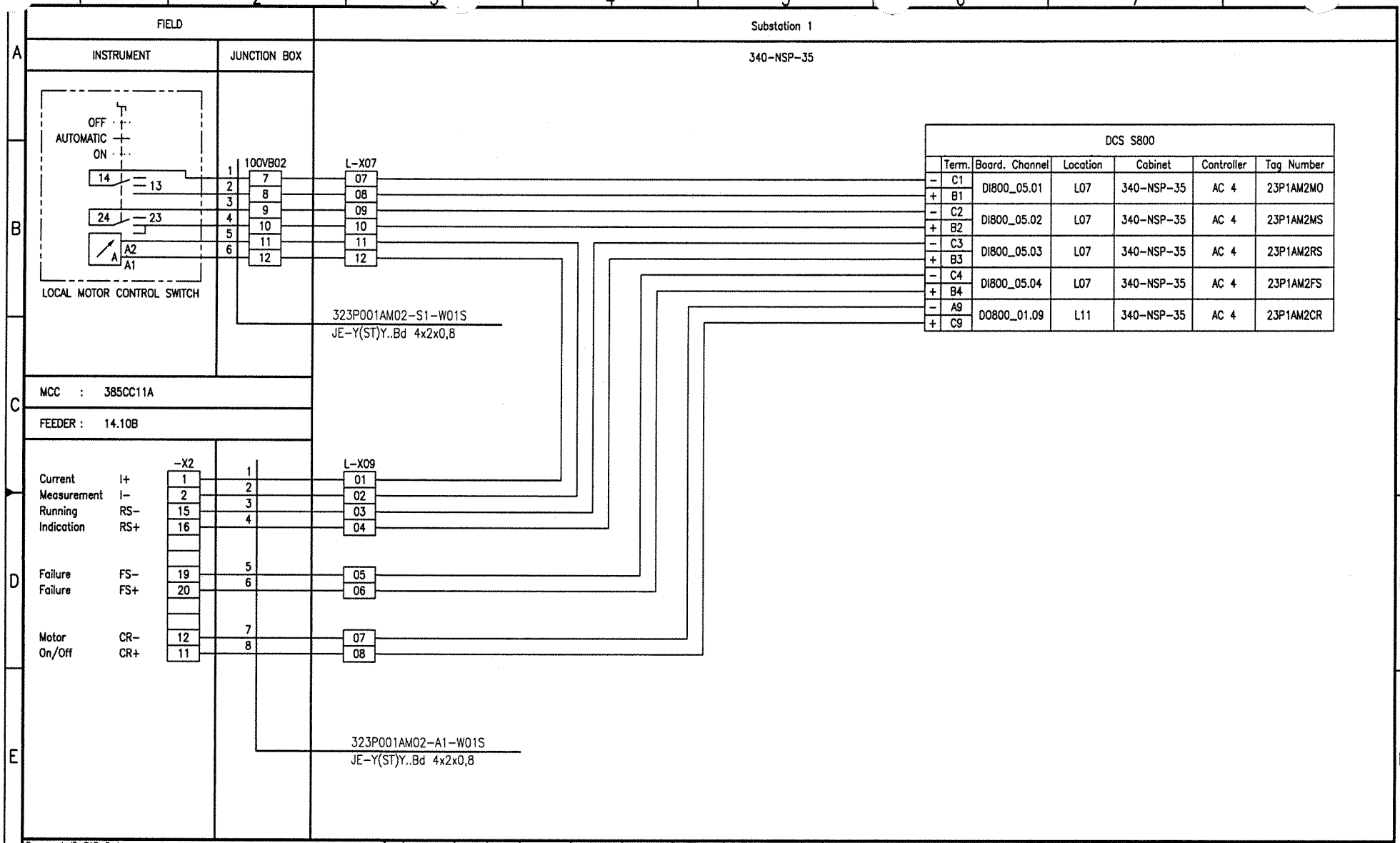

Document-ID-BAR-Code

Rev.	Date	Name (Drawn/Prepared)	Date	Name (Checked)	Date	Name (Approved)	Description	Acc. Code
01	20.09.06	Hie Hie	20.09.06	Heuer	20.09.06	Heuer	AS BUILT	

Pro. Unit	TON	Cat. Code	Acc. Code	Status
Con. Unit	Type of Document: DH	Order No.	Scale	Tot. Sheets

	Date	Name
Drawn	04.04.2005	Hielscher
Prepared	04.04.2005	Hohmann
Checked	04.04.2005	Heuer
Approved	04.04.2005	Heuer

Store Location: Server \\p013040\013040-ADA
Store Location: Folder \EI-ET\DH_el-wiring-diag\
Store Name 01-3040_323P001AM02_000_01.dwg

UAN 01-3040 | Document ID UD-EL-G00-FS-0001 | Part | Rev. 01 | Group

Code

AMMONIA / UREA PROJECT SUEZ II

Uhde

All rights reserved © Uhde GmbH

Designation
Wiring diagram
323P001AM02

ISO A3

BORDER-A3_013040.dwg / AQ13A3_013040.dwg / 17.05.2004

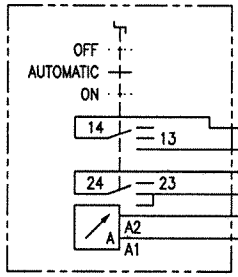

FIELD | Substation 1

INSTRUMENT | JUNCTION BOX | 340-NSP-35

LOCAL MOTOR CONTROL SWITCH

100VB02: 1–13, 2–14, 3–15, 4–16, 5–17, 6–18

L-X07: 13, 14, 15, 16, 17, 18

323P001AM03-S1-W01S
JE-Y(ST)Y..Bd 4x2x0,8

MCC : 385CC11A

FEEDER : 14.10D

		-X2		L-X09
Current Measurement	I+	1	1	09
	I-	2	2	10
Running Indication	RS-	15	3	11
	RS+	16	4	12
Failure	FS-	19	5	13
Failure	FS+	20	6	14
Motor On/Off	CR-	12	7	15
	CR+	11	8	16

323P001AM03-A1-W01S
JE-Y(ST)Y..Bd 4x2x0,8

DCS S800

	Term.	Board. Channel	Location	Cabinet	Controller	Tag Number
-	C5	DI800_05.05	L07	340-NSP-35	AC 4	23P1AM3MO
+	B5					
-	C6	DI800_05.06	L07	340-NSP-35	AC 4	23P1AM3MS
+	B6					
-	C7	DI800_05.07	L07	340-NSP-35	AC 4	23P1AM3RS
+	B7					
-	C8	DI800_05.08	L07	340-NSP-35	AC 4	23P1AM3FS
+	B8					
-	A10	DO800_01.10	L11	340-NSP-35	AC 4	23P1AM3CR
+	C10					

Document-ID-BAR-Code

Rev.	Date	Name (Drawn/Prepared)	Date	Name (Checked)	Date	Name (Approved)	Description	Acc. Code
01	20.09.06	Hie / Hie	20.09.06	Heuer	20.09.06	Heuer	AS BUILT	

Pro. Unit	TON	Cat. Code	Acc. Code	Status
Con. Unit	Type of Document: DH	Order No.	Scale	Tot. Sheets

	Date	Name
Drawn	04.04.2005	Hielscher
Prepared	04.04.2005	Hohmann
Checked	04.04.2005	Heuer
Approved	04.04.2005	Heuer

Store Location: Server \\p013040\013040-ADA
Store Location: Folder \EI-ET\DH_el-wiring-diag\
Store Name 01-3040_323P001AM03_000_01.dwg

Code: UAN 01-3040 | Document ID UD-EL-G00-FS-0001 | Part | Rev. 01 | Group

Uhde

All rights reserved © Uhde GmbH

AMMONIA / UREA PROJECT SUEZ II

Designation: Wiring diagram 323P001AM03

ISO A3

BORDER-A3_013040.dwg / A03A3_013040.dwg / 17.05.2004

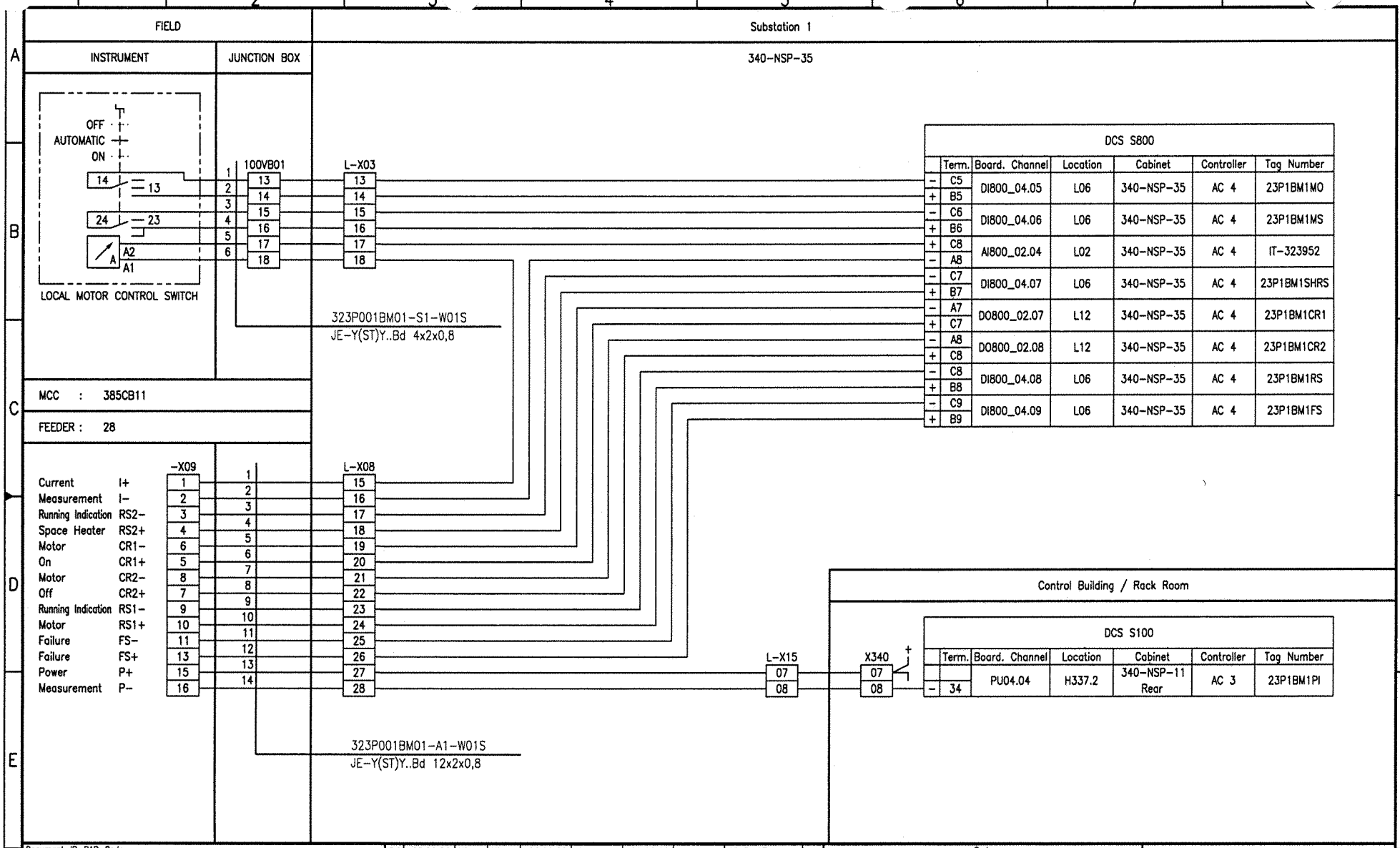
FIELD
Substation 1
INSTRUMENT
JUNCTION BOX
340-NSP-35
OFF
AUTOMATIC
ON
14
13
24
23
A2
A1
LOCAL MOTOR CONTROL SWITCH
100VB01
L-X03
323P001BM01-S1-W01S
JE-Y(ST)Y..Bd 4x2x0,8
MCC : 385CB11
FEEDER : 28
-X09
L-X08
Current I+
Measurement I-
Running Indication RS2-
Space Heater RS2+
Motor CR1-
On CR1+
Motor CR2-
Off CR2+
Running Indication RS1-
Motor RS1+
Failure FS-
Failure FS+
Power P+
Measurement P-
323P001BM01-A1-W01S
JE-Y(ST)Y..Bd 12x2x0,8
L-X15
X340
Control Building / Rack Room
DCS S800
Term. Board. Channel Location Cabinet Controller Tag Number
C5 B5 DI800_04.05 L06 340-NSP-35 AC 4 23P1BM1MO
C6 B6 DI800_04.06 L06 340-NSP-35 AC 4 23P1BM1MS
C8 A8 AI800_02.04 L02 340-NSP-35 AC 4 IT-323952
C7 B7 DI800_04.07 L06 340-NSP-35 AC 4 23P1BM1SHRS
A7 C7 DO800_02.07 L12 340-NSP-35 AC 4 23P1BM1CR1
A8 C8 DO800_02.08 L12 340-NSP-35 AC 4 23P1BM1CR2
C8 B8 DI800_04.08 L06 340-NSP-35 AC 4 23P1BM1RS
C9 B9 DI800_04.09 L06 340-NSP-35 AC 4 23P1BM1FS
DCS S100
Term. Board. Channel Location Cabinet Controller Tag Number
34 PU04.04 H337.2 340-NSP-11 Rear AC 3 23P1BM1PI
Document-ID-BAR-Code
01 20.09.06 Hie Hie 20.09.06 Heuer 20.09.06 Heuer AS BUILT
Rev. Date Name Date Name Date Name Description Acc. Code
Drawn/Prepared Checked Approved
UAN 01-3040
Document ID UD-EL-G00-FS-0001
Part Rev. 01 Group
Uhde
All rights reserved © Uhde GmbH
Pro. Unit TON Cat. Code Acc. Code Status
Con. Unit Type of Document DH Order No. Scale Tot. Sheets
Drawn 04.04.2005 Hielscher
Prepared 04.04.2005 Hohmann
Checked 04.04.2005 Heuer
Approved 04.04.2005 Heuer
AMMONIA / UREA PROJECT SUEZ II
Designation
Wiring diagram 323P001BM01
Store Location: Server \\p013040\013040-ADA
Store Location: Folder \Ei-ET\DH_el-wiring-diag\
Store Name 01-3040_323P001BM01_000_01.dwg
ISO A3
BORDER-A3_013040.dwg / A003A3_013040.dwg / 17.05.2004

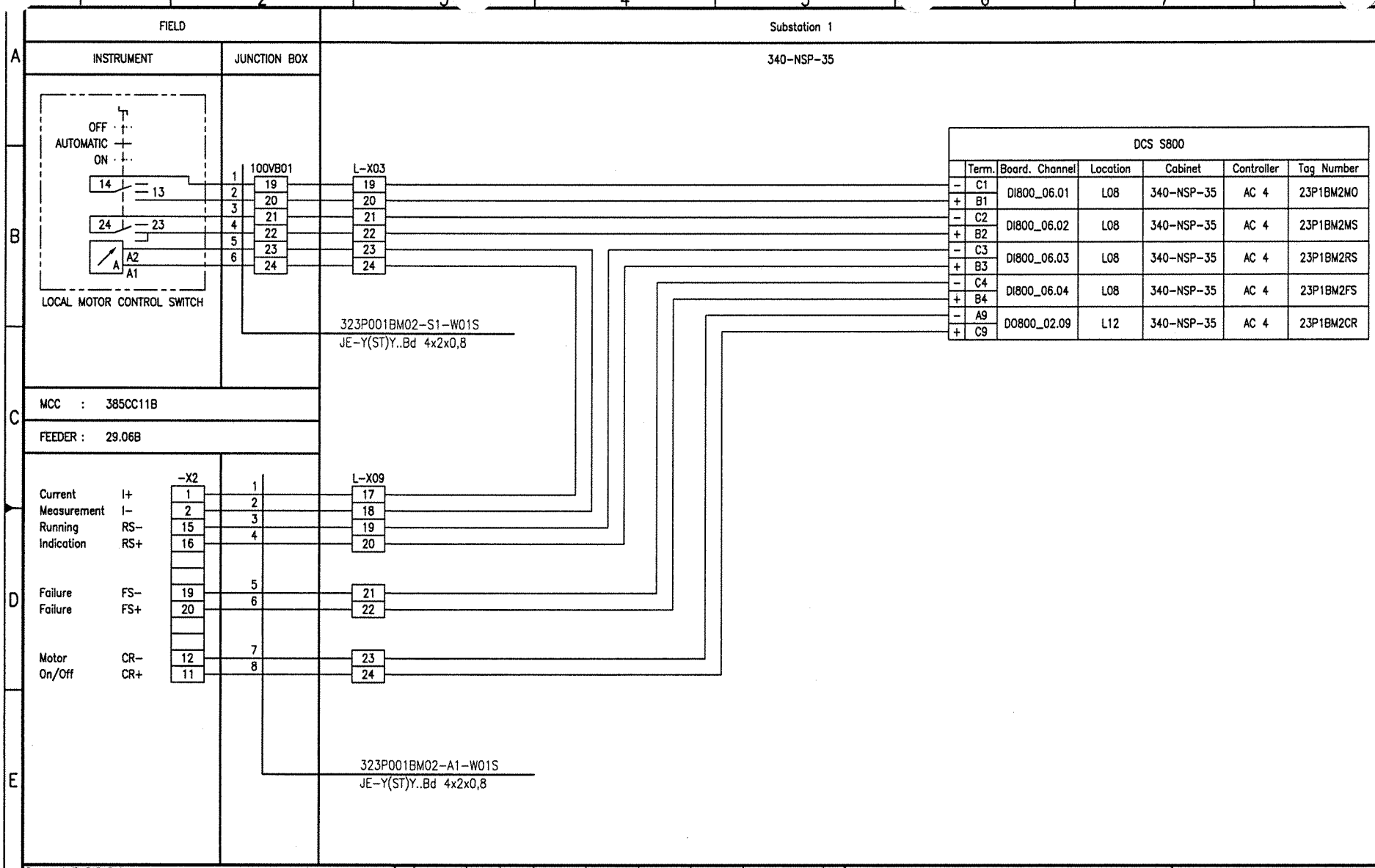

Document-ID-BAR-Code

Rev.	Date	Name (Drawn/Prepared)	Date	Name (Checked)	Date	Name (Approved)	Description	Acc. Code
01	20.09.06	Hie Hie	20.09.06	Heuer	20.09.06	Heuer	AS BUILT	

UAN	Document ID	Part	Rev.	Group
01-3040	UD-EL-G00-FS-0001		01	

Code

Uhde

All rights reserved © Uhde GmbH

Pro. Unit	TON	Cat. Code	Acc. Code	Status
Con. Unit	Type of Document: DH	Order No.	Scale	Tot. Sheets

	Date	Name
Drawn	04.04.2005	Hielscher
Prepared	04.04.2005	Hohmann
Checked	04.04.2005	Heuer
Approved	04.04.2005	Heuer

AMMONIA / UREA PROJECT SUEZ II

Designation
Wiring diagram
323P001BM02

Store Location: Server \\p013040\013040-ADA
Store Location: Folder \EI-ET\DH_el-wiring-diag\
Store Name 01-3040_323P001BM02_000_01.dwg

ISO A3

BORDER-A3_013040.dwg / A03A3_013040.dwg / 17.05.2004

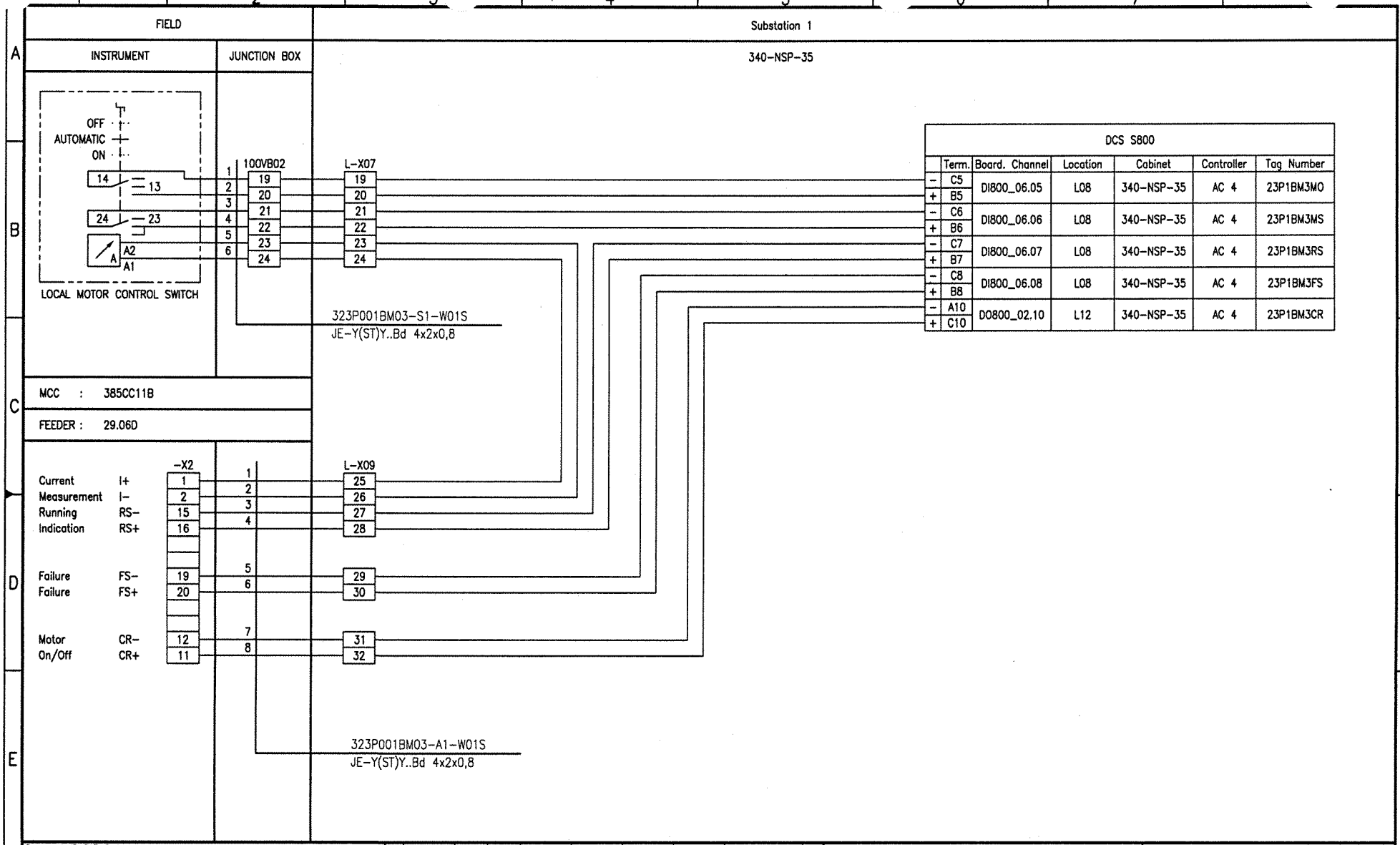

Document-ID-BAR-Code

Rev.	Date	Name	Date	Name	Date	Name	Description	Acc. Code
01	20.09.06	Hie	20.09.06	Heuer	20.09.06	Heuer	AS BUILT	
	Drawn/Prepared		Checked		Approved			

UAN	Document ID	Part	Rev.	Group
01-3040	UD-EL-G00-FS-0001		01	

Code

Uhde

All rights reserved © Uhde GmbH

Pro. Unit	TON	Cat. Code	Acc. Code	Status

Con. Unit	Type of Document	Order No.	Scale	Tot. Sheets
	DH			

	Date	Name
Drawn	04.04.2005	Hielscher
Prepared	04.04.2005	Hohmann
Checked	04.04.2005	Heuer
Approved	04.04.2005	Heuer

AMMONIA / UREA
PROJECT
SUEZ II

Designation
Wiring diagram
323P001BM03

Store Location: Server
\\p013040\013040-ADA

Store Location: Folder
\EI-ET\DH_el-wiring-diag\

Store Name
01-3040_323P001BM03_000_01.dwg

ISO A3

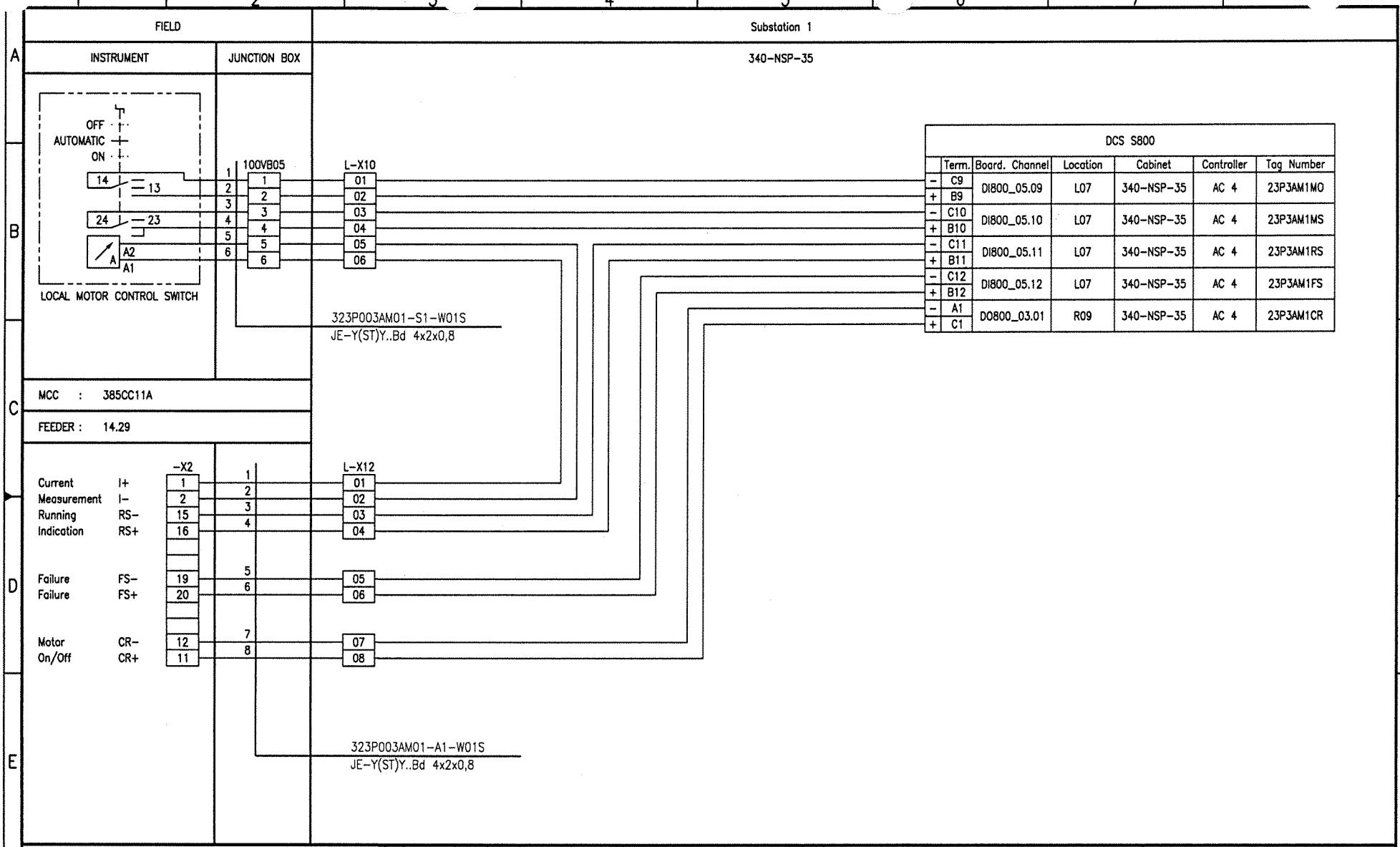

Document-ID-BAR-Code

Rev.	Date	Name (Drawn/Prepared)	Date	Name (Checked)	Date	Name (Approved)	Description	Acc. Code
01	20.09.06	Hie Hie	20.09.06	Heuer	20.09.06	Heuer	AS BUILT	

UAN	Document ID	Part	Rev.	Group
01-3040	UD-EL-G00-FS-0001		01	

Code

Uhde

All rights reserved © Uhde GmbH

Pro. Unit	TON	Cat. Code	Acc. Code	Status
Con. Unit	Type of Document: DH	Order No.	Scale	Tot. Sheets

	Date	Name
Drawn	04.04.2005	Hielscher
Prepared	04.04.2005	Hohmann
Checked	04.04.2005	Heuer
Approved	04.04.2005	Heuer

AMMONIA / UREA PROJECT SUEZ II

Designation
Wiring diagram
323P003AM01

Store Location: Server \\p013040\013040-ADA
Store Location: Folder \EI-ET\DH_el-wiring-diag\
Store Name 01-3040_323P003AM01_000_01.dwg

ISO A3

BORDER-A3_013040.dwg / AG0343_013040.dwg / 17.05.2004

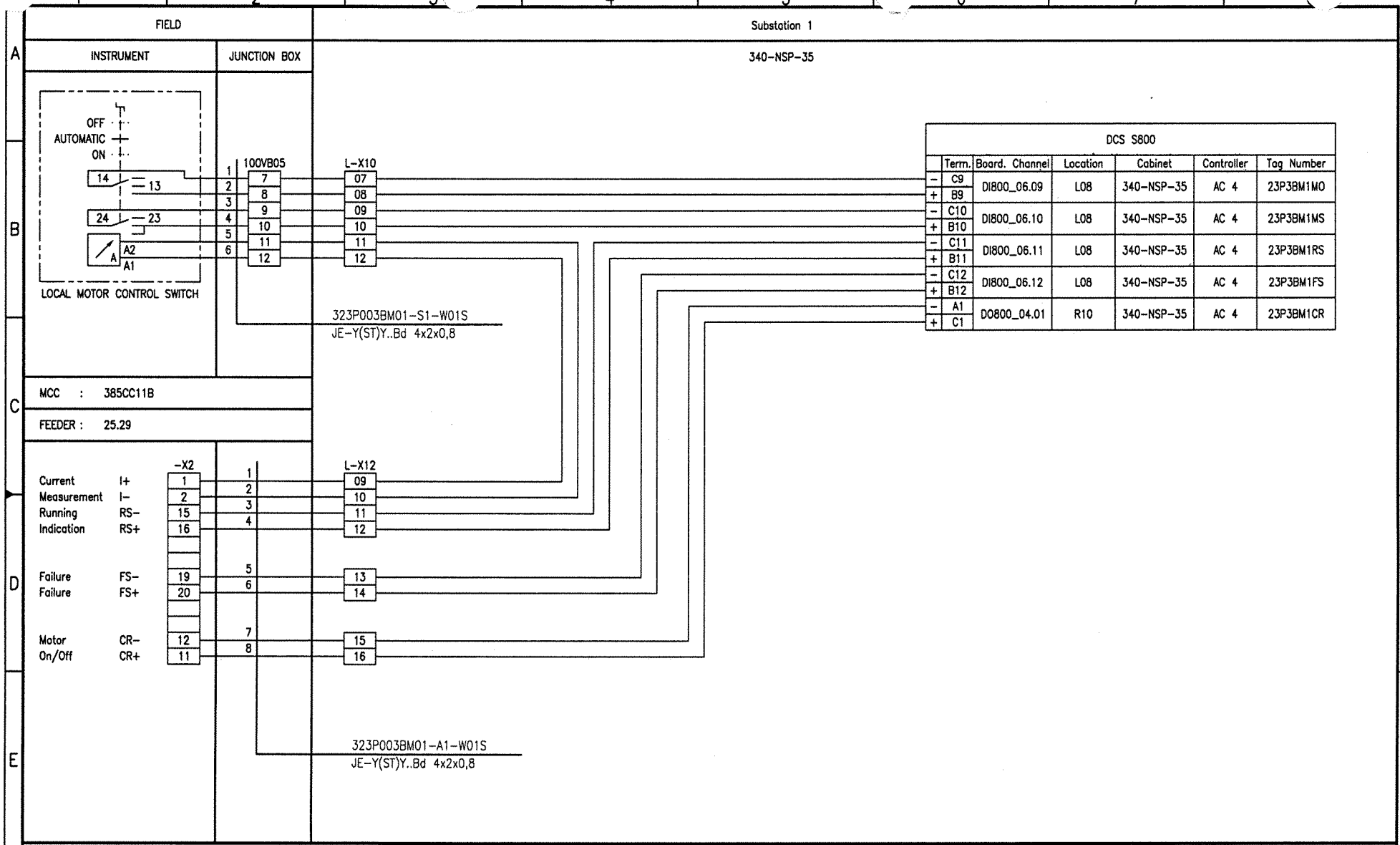

Document-ID-BAR-Code

Rev.	Date	Name (Drawn/Prepared)	Date	Name (Checked)	Date	Name (Approved)	Description	Acc. Code
01	20.09.06	Hie Hie	20.09.06	Heuer	20.09.06	Heuer	AS BUILT	

UAN	Document ID	Part	Rev.	Group
01-3040	UD-EL-G00-FS-0001		01	

Code

Uhde

All rights reserved © Uhde GmbH

Pro. Unit	TON	Cat. Code	Acc. Code	Status
Con. Unit	Type of Document: DH	Order No.	Scale	Tot. Sheets

	Date	Name
Drawn	04.04.2005	Hielscher
Prepared	04.04.2005	Hohmann
Checked	04.04.2005	Heuer
Approved	04.04.2005	Heuer

AMMONIA / UREA PROJECT SUEZ II

Designation
Wiring diagram
323P003BM01

Store Location: Server \\p013040\013040-ADA
Store Location: Folder \EI-ET\DH_el-wiring-diag\
Store Name 01-3040_323P003BM01_000_01.dwg

ISO A3

BORDER-A3_013040.dwg / A0313A3_013040.dwg / 17.05.2004

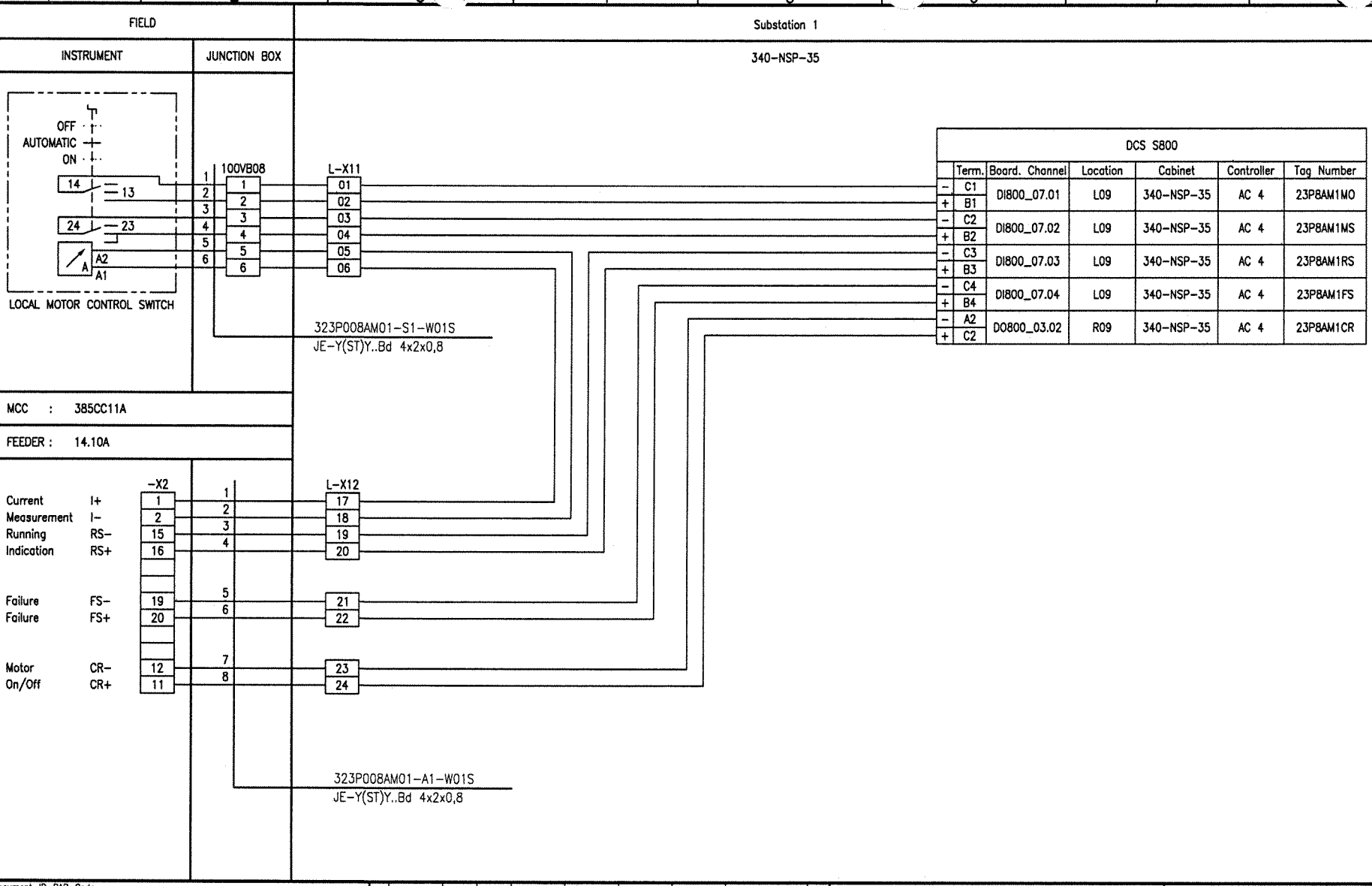

Document-ID-BAR-Code

Rev.	Date	Name	Date	Name	Date	Name	Description	Acc. Code
01	20.09.06	Hie	20.09.06	Heuer	20.09.06	Heuer	AS BUILT	
	Drawn/Prepared		Checked		Approved			

UAN	Document ID	Part	Rev.	Group
01-3040	UD-EL-G00-FS-0001		01	

Code

Uhde

All rights reserved © Uhde GmbH

Pro. Unit	TON	Cat. Code	Acc. Code	Status

Con. Unit	Type of Document	Order No.	Scale	Tot. Sheets
	DH			

	Date	Name
Drawn	04.04.2005	Hielscher
Prepared	04.04.2005	Hohmann
Checked	04.04.2005	Heuer
Approved	04.04.2005	Heuer

AMMONIA / UREA PROJECT SUEZ II

Designation
Wiring diagram
323P008AM01

Store Location: Server
\\p013040\013040-ADA

Store Location: Folder
\Ei-ET\DH_el-wiring-diag\

Store Name
01-3040_323P008AM01_000_01.dwg

ISO A3

BORDER-A3_013040.dwg / AQ03A3_013040.dwg / 17.05.2004

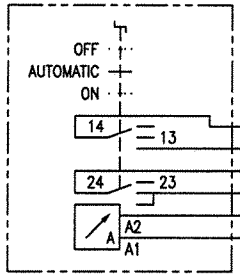

LOCAL MOTOR CONTROL SWITCH

FIELD | Substation 1

INSTRUMENT | JUNCTION BOX | 340-NSP-35

100VB08: 1, 2, 3, 4, 5, 6 — 7, 8, 9, 10, 11, 12

L-X11: 07, 08, 09, 10, 11, 12

323P008BM01-S1-W01S
JE-Y(ST)Y..Bd 4x2x0,8

MCC : 385CC11B

FEEDER : 29.06A

		-X2		L-X12
Current Measurement	I+	1	1	25
	I-	2	2	26
Running Indication	RS-	15	3	27
	RS+	16	4	28
Failure	FS-	19	5	29
Failure	FS+	20	6	30
Motor On/Off	CR-	12	7	31
	CR+	11	8	32

323P008BM01-A1-W01S
JE-Y(ST)Y..Bd 4x2x0,8

DCS S800

	Term.	Board. Channel	Location	Cabinet	Controller	Tag Number
-	C1	DI800_08.01	L10	340-NSP-35	AC 4	23P8BM1MO
+	B1					
-	C2	DI800_08.02	L10	340-NSP-35	AC 4	23P8BM1MS
+	B2					
-	C3	DI800_08.03	L10	340-NSP-35	AC 4	23P8BM1RS
+	B3					
-	C4	DI800_08.04	L10	340-NSP-35	AC 4	23P8BM1FS
+	B4					
-	A2	DO800_04.02	R10	340-NSP-35	AC 4	23P8BM1CR
+	C2					

Document-ID-BAR-Code

Rev.	Date	Name	Date	Name	Date	Name	Description	Acc. Code
	Drawn/Prepared		Checked		Approved			
01	20.09.06	Hie	20.09.06	Heuer	20.09.06	Heuer	AS BUILT	

UAN	Document ID	Port	Rev.	Group
01-3040	UD-EL-G00-FS-0001		01	

Code

Uhde

All rights reserved © Uhde GmbH

Pro. Unit	TON	Cat. Code	Acc. Code	Status
Con. Unit	Type of Document: DH	Order No.	Scale	Tot. Sheets

	Date	Name
Drawn	04.04.2005	Hielscher
Prepared	04.04.2005	Hohmann
Checked	04.04.2005	Heuer
Approved	04.04.2005	Heuer

AMMONIA / UREA PROJECT SUEZ II

Designation
Wiring diagram
323P008BM01

Store Location: Server \\p013040\013040-ADA
Store Location: Folder \Ei-ET\DH_el-wiring-diag\
Store Name 01-3040_323P008BM01_000_01.dwg

ISO A3

BORDER-A3_013040.dwg / AG03A3_013040.dwg / 17.05.2004

CONTENTS

Loop Index (S 800 MOTORS)Processunit 328
Desorption & Hydrolysis

Tag No.	Rev.	Crossreference: See	Remarks	File No.
328P002AM01	01			
328P002BM01	01			
328P003AM01	01			
328P003BM01	01			
328P006AM01	01			
328P006BM01	01			
328P007AM01	01			
328P007BM01	01			

I:\EI-ET-DH_el-wiring-diag\01-3040_Wiring_diagrams_coversheet_01.doc

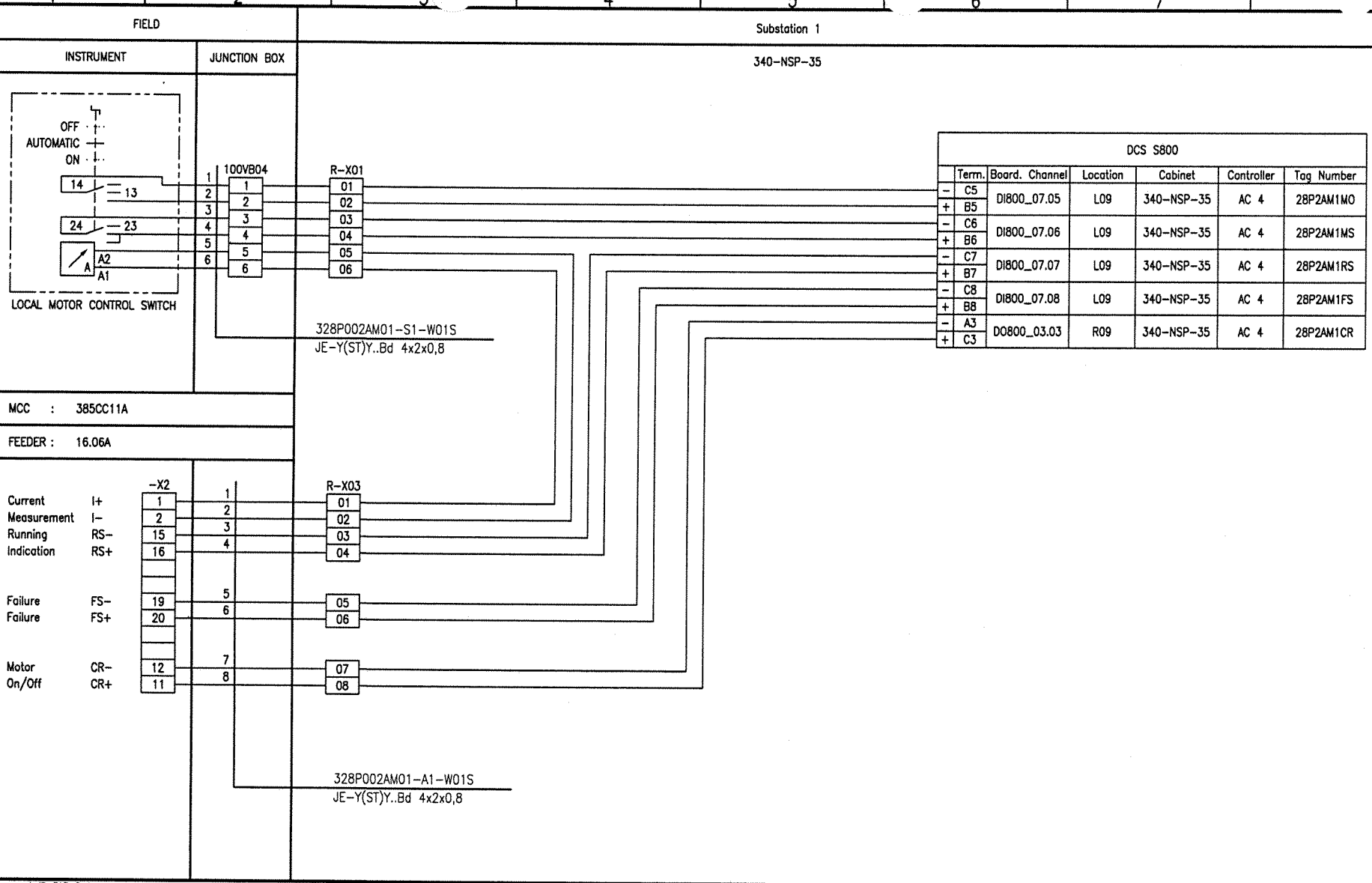

Document-ID-BAR-Code

Rev.	Date	Name (Drawn/Prepared)	Date	Name (Checked)	Date	Name (Approved)	Description	Acc. Code
01	20.09.06	Hie Hie	20.09.06	Heuer	20.09.06	Heuer	AS BUILT	

UAN 01-3040 | Code: Document ID UD-EL-G00-FS-0001 | Part | Rev. 01 | Group

Uhde

All rights reserved © Uhde GmbH

Pro. Unit | TON | Cat. Code | Acc. Code | Status

Con. Unit | Type of Document DH | Order No. | Scale | Tot. Sheets

	Date	Name
Drawn	04.04.2005	Hielscher
Prepared	04.04.2005	Hohmann
Checked	04.04.2005	Heuer
Approved	04.04.2005	Heuer

AMMONIA / UREA PROJECT SUEZ II

Designation: Wiring diagram 328P002AM01

Store Location: Server \\p013040\013040-ADA | Store Location: Folder \Ei-ET\DH_el-wiring-diag\ | Store Name 01-3040_328P002AM01_000_01.dwg

ISO A3

BORDER-A3_013040.dwg / A03A3_013040.dwg / 17.05.2004

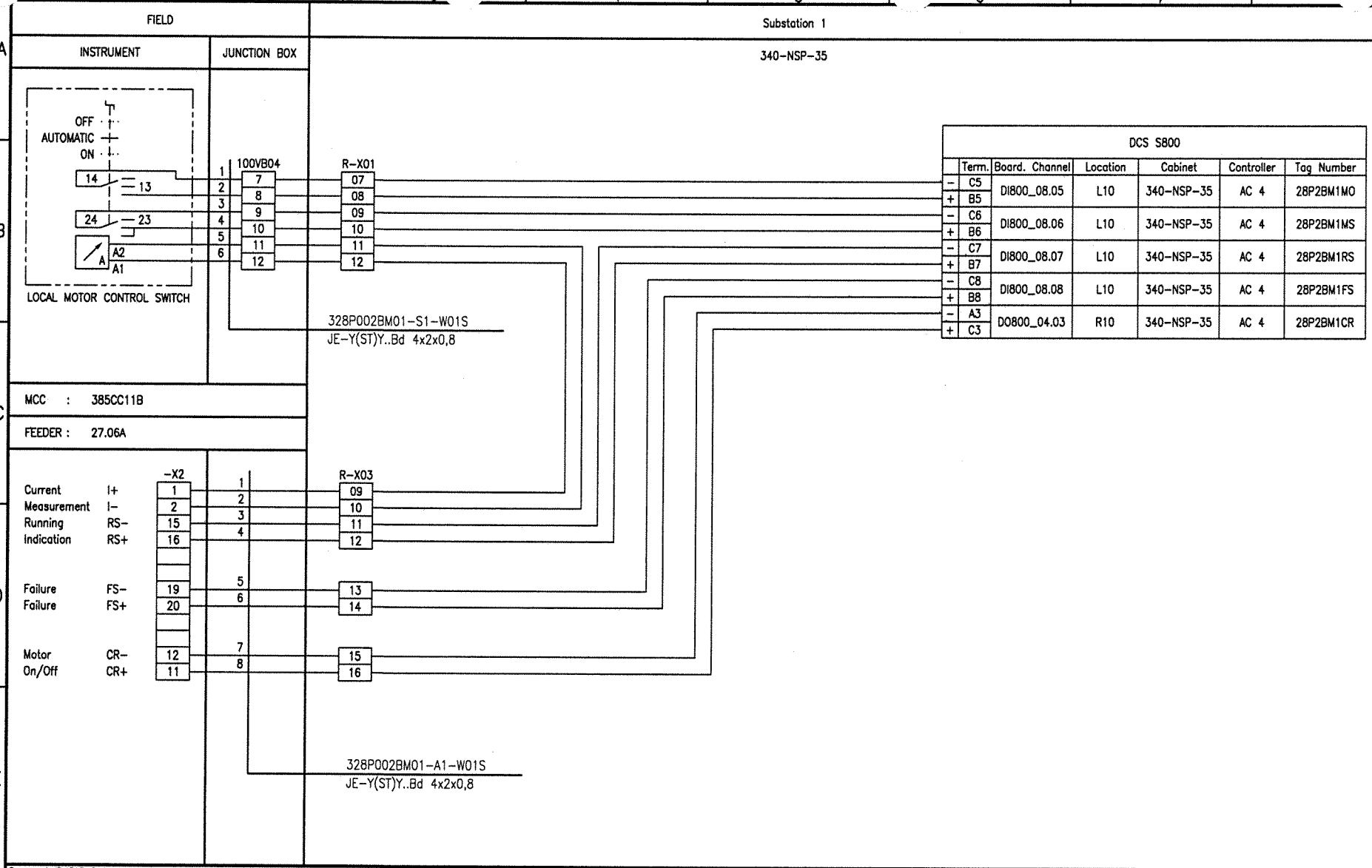

Document-ID-BAR-Code

Rev.	Date	Name (Drawn/Prepared)	Date	Name (Checked)	Date	Name (Approved)	Description	Acc. Code
01	20.09.06	Hie Hie	20.09.06	Heuer	20.09.06	Heuer	AS BUILT	

UAN	Document ID	Part	Rev.	Group
01-3040	UD-EL-G00-FS-0001		01	

Code

Uhde

All rights reserved © Uhde GmbH

Pro. Unit	TON	Cat. Code	Acc. Code	Status
Con. Unit	Type of Document: DH	Order No.	Scale	Tot. Sheets

	Date	Name
Drawn	04.04.2005	Hielscher
Prepared	04.04.2005	Hohmann
Checked	04.04.2005	Heuer
Approved	04.04.2005	Heuer

AMMONIA / UREA PROJECT SUEZ II

Designation
Wiring diagram
328P002BM01

Store Location: Server
\\p013040\013040-ADA

Store Location: Folder
\EI-ET\DH_el-wiring-diag\

Store Name
01-3040_328P002BM01_000_01.dwg

ISO A3

BORDER-A3_013040.dwg / AG03A3_013040.dwg / 17.05.2004

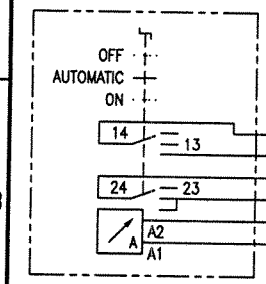

FIELD

INSTRUMENT | JUNCTION BOX

Substation 1

340-NSP-35

DCS S800						
	Term.	Board. Channel	Location	Cabinet	Controller	Tag Number
-	C9	DI800_07.09	L09	340-NSP-35	AC 4	28P3AM1MO
+	B9					
-	C10	DI800_07.10	L09	340-NSP-35	AC 4	28P3AM1MS
+	B10					
+	C4	AI800_03.02	R01	340-NSP-35	AC 4	IT-328903
-	A4					
-	C11	DI800_07.11	L09	340-NSP-35	AC 4	28P3AM1RS
+	B11					
-	C12	DI800_07.12	L09	340-NSP-35	AC 4	28P3AM1FS
+	B12					
-	A4	DO800_03.04	R09	340-NSP-35	AC 4	28P3AM1CR
+	C4					

Document-ID-BAR-Code

Rev.	Date	Name	Drawn/Prepared	Date	Name	Checked	Date	Name	Approved	Description	Acc. Code
01	20.09.06	Hie	Hie	20.09.06	Heuer		20.09.06	Heuer		AS BUILT	

UAN	Code: Document ID	Part	Rev.	Group
01-3040	UD-EL-G00-FS-0001		01	

Uhde

All rights reserved © Uhde GmbH

Pro. Unit	TON	Cat. Code	Acc. Code	Status
Con. Unit	Type of Document: DH	Order No.	Scale	Tot. Sheets

	Date	Name
Drawn	04.04.2005	Hielscher
Prepared	04.04.2005	Hohmann
Checked	04.04.2005	Heuer
Approved	04.04.2005	Heuer

AMMONIA / UREA PROJECT SUEZ II

Designation: Wiring diagram 328P003AM01

Store Location: Server \\p013040\013040-ADA

Store Location: Folder \EI-ET\DH_el-wiring-diag\

Store Name: 01-3040_328P003AM01_000_01.dwg

ISO A3

BORDER-A3_013040.dwg / A003A3_013040.dwg / 17.05.2004

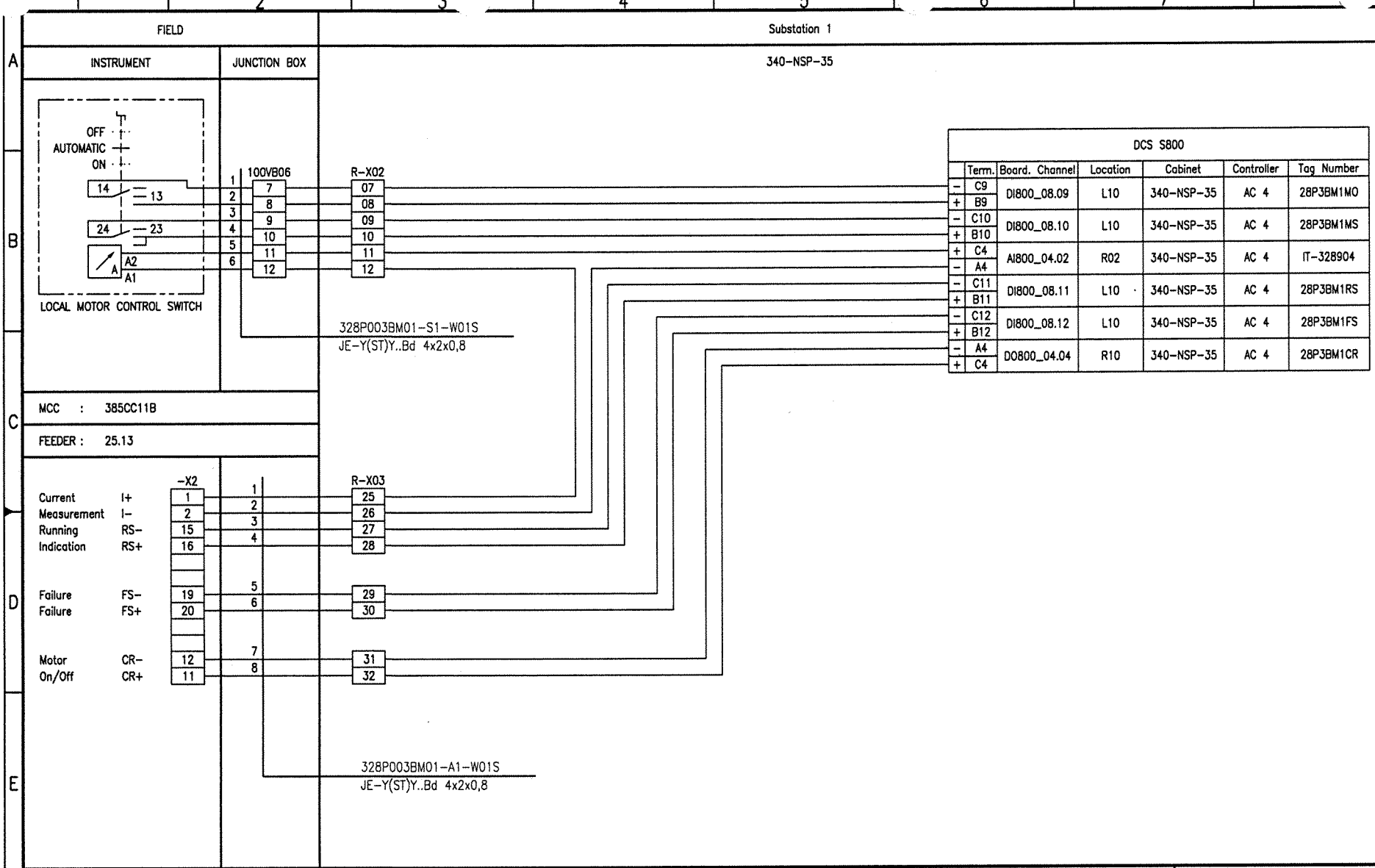

Document-ID-BAR-Code

Rev.	Date	Name (Drawn/Prepared)	Date	Name (Checked)	Date	Name (Approved)	Description	Acc. Code
01	20.09.06	Hie Hie	20.09.06	Heuer	20.09.06	Heuer	AS BUILT	

UAN	Document ID	Part	Rev.	Group
01-3040	UD-EL-G00-FS-0001		01	

Code

Uhde

All rights reserved © Uhde GmbH

Pro. Unit	TON	Cat. Code	Acc. Code	Status
Con. Unit	Type of Document: DH	Order No.	Scale	Tot. Sheets

	Date	Name
Drawn	04.04.2005	Hielscher
Prepared	04.04.2005	Hohmann
Checked	04.04.2005	Heuer
Approved	04.04.2005	Heuer

AMMONIA / UREA PROJECT SUEZ II

Designation
Wiring diagram
328P003BM01

Store Location: Server \\p013040\013040-ADA
Store Location: Folder \Ei-ET\DH_el-wiring-diag\
Store Name 01-3040_328P003BM01_000_01.dwg

ISO A3

BORDER-A3_013040.dwg / AG0343_013040.dwg / 17.05.2004

FIELD | Substation 1

INSTRUMENT | JUNCTION BOX | 340-NSP-35

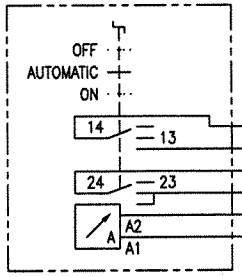

LOCAL MOTOR CONTROL SWITCH

100VB06: 1, 2, 3, 4, 5, 6 — 13, 14, 15, 16, 17, 18

R-X02: 13, 14, 15, 16, 17, 18

328P006AM01-S1-W01S
JE-Y(ST)Y..Bd 4x2x0,8

MCC : 385CC11A

FEEDER : 04.26

		-X2		R-X04
Current	I+	1	1	01
Measurement	I-	2	2	02
Running	RS-	15	3	03
Indication	RS+	16	4	04
Failure	FS-	19	5	05
Failure	FS+	20	6	06
Motor	CR-	12	7	07
On/Off	CR+	11	8	08

328P006AM01-A1-W01S
JE-Y(ST)Y..Bd 4x2x0,8

DCS S800

	Term.	Board. Channel	Location	Cabinet	Controller	Tag Number
-	C1	DI800_09.01	R03	340-NSP-35	AC 4	28P6AM1MO
+	B1					
-	C2	DI800_09.02	R03	340-NSP-35	AC 4	28P6AM1MS
+	B2					
+	C2	AI800_03.01	R01	340-NSP-35	AC 4	IT-328901
-	A2					
-	C3	DI800_09.03	R03	340-NSP-35	AC 4	28P6AM1RS
+	B3					
-	C4	DI800_09.04	R03	340-NSP-35	AC 4	28P6AM1FS
+	B4					
-	A5	DO800_03.05	R09	340-NSP-35	AC 4	28P6AM1CR
+	C5					

Document-ID-BAR-Code

Rev.	Date	Name	Date	Name	Date	Name	Description	Acc. Code
01	20.09.06	Hie	20.09.06	Heuer	20.09.06	Heuer	AS BUILT	
	Drawn/Prepared		Checked		Approved			

UAN	Code: Document ID	Part	Rev.	Group
01-3040	UD-EL-G00-FS-0001		01	

Uhde

All rights reserved © Uhde GmbH

Pro. Unit	TON	Cat. Code	Acc. Code	Status
Con. Unit	Type of Document: DH	Order No.	Scale	Tot. Sheets

	Date	Name
Drawn	04.04.2005	Hielscher
Prepared	04.04.2005	Hohmann
Checked	04.04.2005	Heuer
Approved	04.04.2005	Heuer

AMMONIA / UREA PROJECT SUEZ II

Designation: Wiring diagram 328P006AM01

Store Location: Server \\p013040\013040-ADA
Store Location: Folder \EI-ET\DH_el-wiring-diag\
Store Name 01-3040_328P006AM01_000_01.dwg

ISO A3

BORDER-A3_013040.dwg / AG03A3_013040.dwg / 17.05.2004

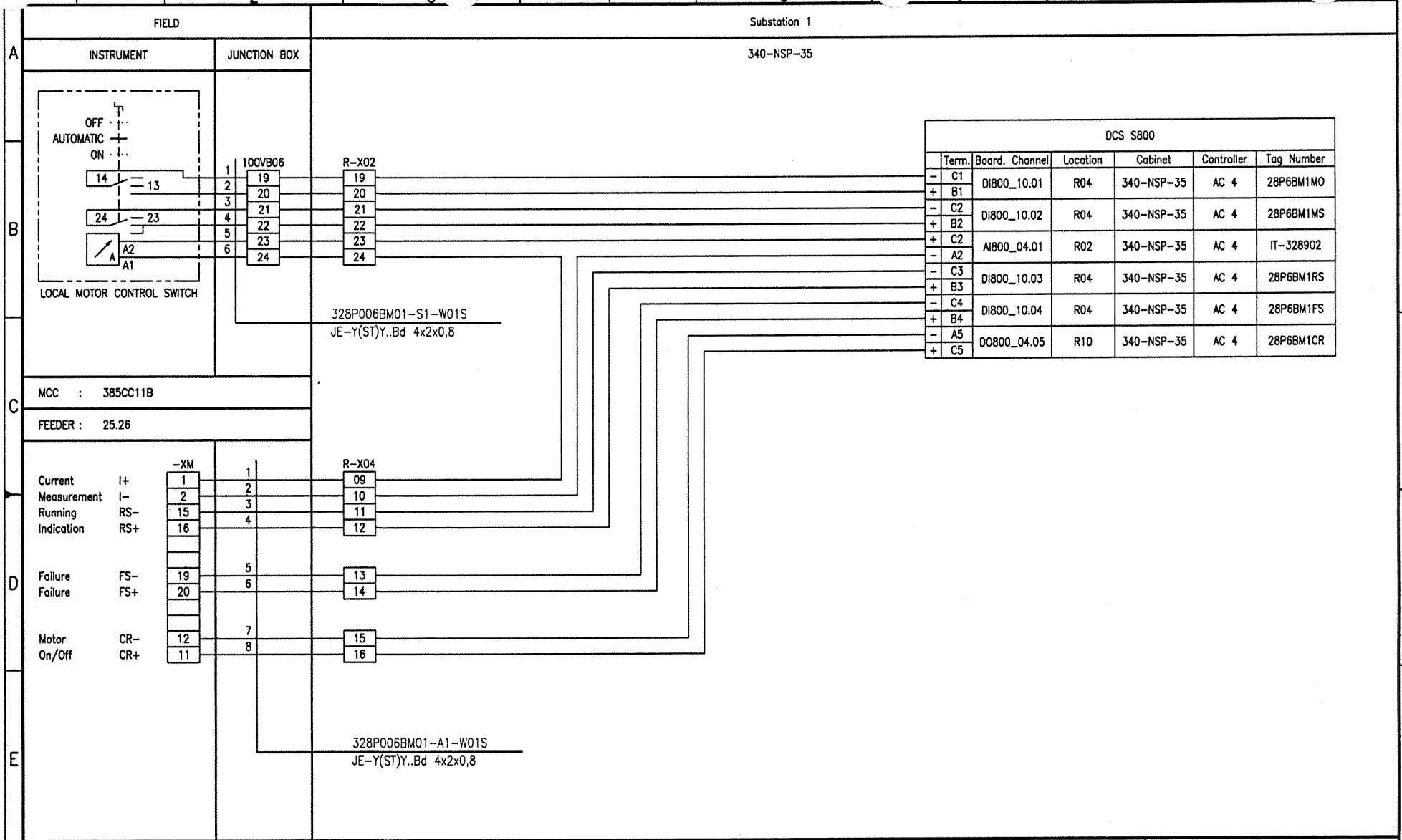
FIELD
Substation 1
INSTRUMENT
JUNCTION BOX
340-NSP-35
OFF
AUTOMATIC
ON
14
13
24
23
A2
A1
LOCAL MOTOR CONTROL SWITCH
100VB06
R-X02
328P006BM01-S1-W01S
JE-Y(ST)Y..Bd 4x2x0,8
MCC : 385CC11B
FEEDER : 25.26
-XM
Current I+
Measurement I-
Running RS-
Indication RS+
Failure FS-
Failure FS+
Motor CR-
On/Off CR+
R-X04
328P006BM01-A1-W01S
JE-Y(ST)Y..Bd 4x2x0,8
DCS S800
Term. Board. Channel Location Cabinet Controller Tag Number
C1 B1 DI800_10.01 R04 340-NSP-35 AC 4 28P6BM1MO
C2 B2 DI800_10.02 R04 340-NSP-35 AC 4 28P6BM1MS
C2 A2 AI800_04.01 R02 340-NSP-35 AC 4 IT-328902
C3 B3 DI800_10.03 R04 340-NSP-35 AC 4 28P6BM1RS
C4 B4 DI800_10.04 R04 340-NSP-35 AC 4 28P6BM1FS
A5 C5 DO800_04.05 R10 340-NSP-35 AC 4 28P6BM1CR
Document-ID-BAR-Code
01 20.09.06 Hie Hie 20.09.06 Heuer 20.09.06 Heuer AS BUILT
Rev. Date Name Date Name Date Name Description Acc. Code
Drawn/Prepared Checked Approved
UAN 01-3040
Document ID UD-EL-G00-FS-0001
Part Rev. 01 Group
Uhde
All rights reserved © Uhde GmbH
Pro. Unit TON Cat. Code Acc. Code Status
Con. Unit Type of Document DH Order No. Scale Tot. Sheets
Drawn 04.04.2005 Hielscher
Prepared 04.04.2005 Hohmann
Checked 04.04.2005 Heuer
Approved 04.04.2005 Heuer
AMMONIA / UREA PROJECT SUEZ II
Designation
Wiring diagram 328P006BM01
Store Location: Server \\p013040\013040-ADA
Store Location: Folder \EI-ET\DH_el-wiring-diag\
Store Name 01-3040_328P006BM01_000_01.dwg
ISO A3
BORDER-A3_013040.dwg / A3G3A3_013040.dwg / 17.05.2004

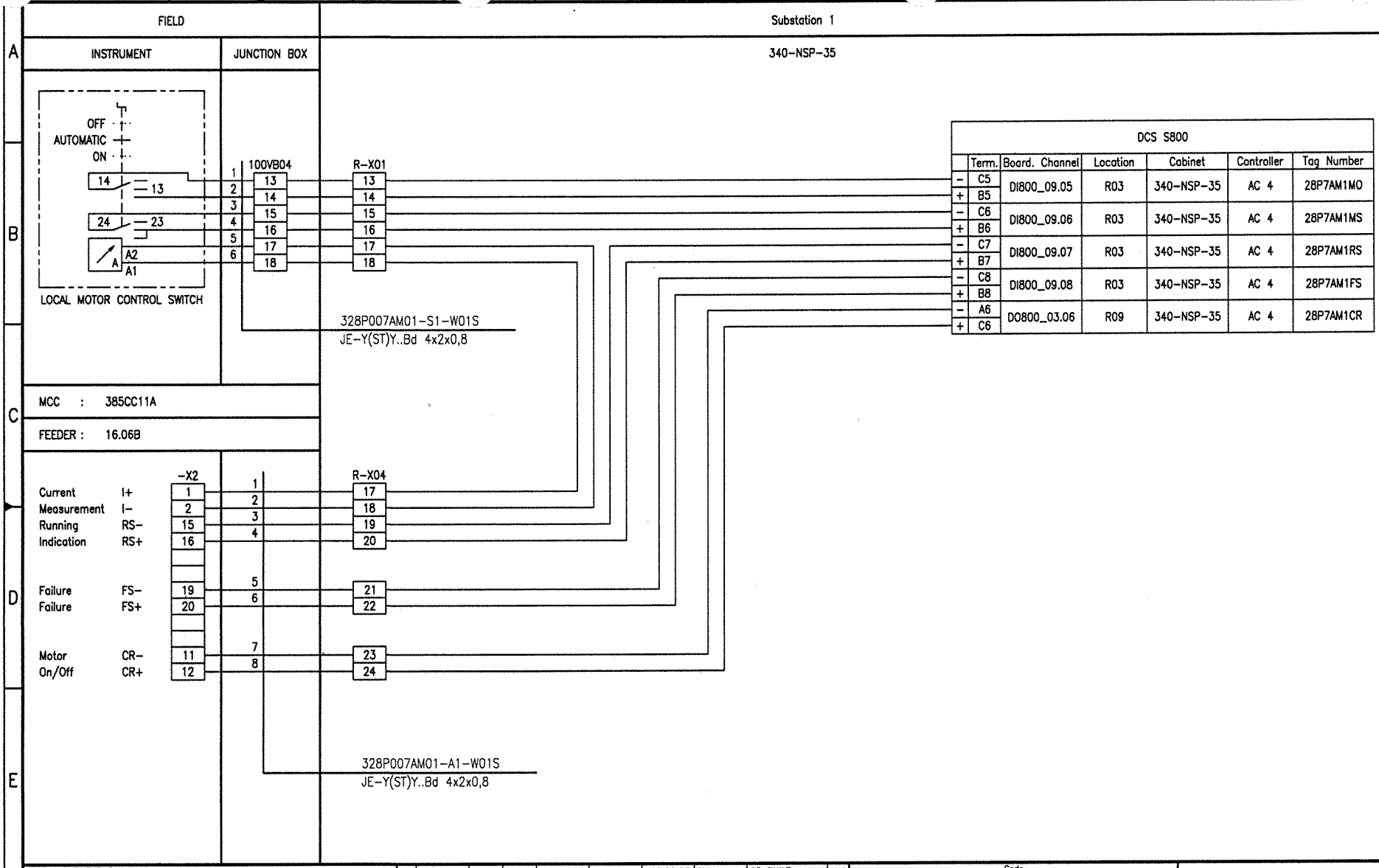

Document-ID-BAR-Code

Rev.	Date	Name (Drawn/Prepared)	Date	Name (Checked)	Date	Name (Approved)	Description	Acc. Code
01	20.09.06	Hie	20.09.06	Heuer	20.09.06	Heuer	AS BUILT	

Pro. Unit	TON	Cat. Code	Acc. Code	Status

Con. Unit	Type of Document	Order No.	Scale	Tot. Sheets
	DH			

	Date	Name
Drawn	04.04.2005	Hielscher
Prepared	04.04.2005	Hohmann
Checked	04.04.2005	Heuer
Approved	04.04.2005	Heuer

Code

UAN	Document ID	Part	Rev.	Group
01-3040	UD-EL-G00-FS-0001		01	

Uhde

All rights reserved © Uhde GmbH

AMMONIA / UREA PROJECT SUEZ II

Designation
Wiring diagram
328P007AM01

Store Location: Server
\\p013040\013040-ADA

Store Location: Folder
\EI-ET\DH_el-wiring-diag\

Store Name
01-3040_328P007AM01_000_01.dwg

ISO A3

BORDER-A3_013040.dwg / A03A3_013040.dwg / 17.05.2004

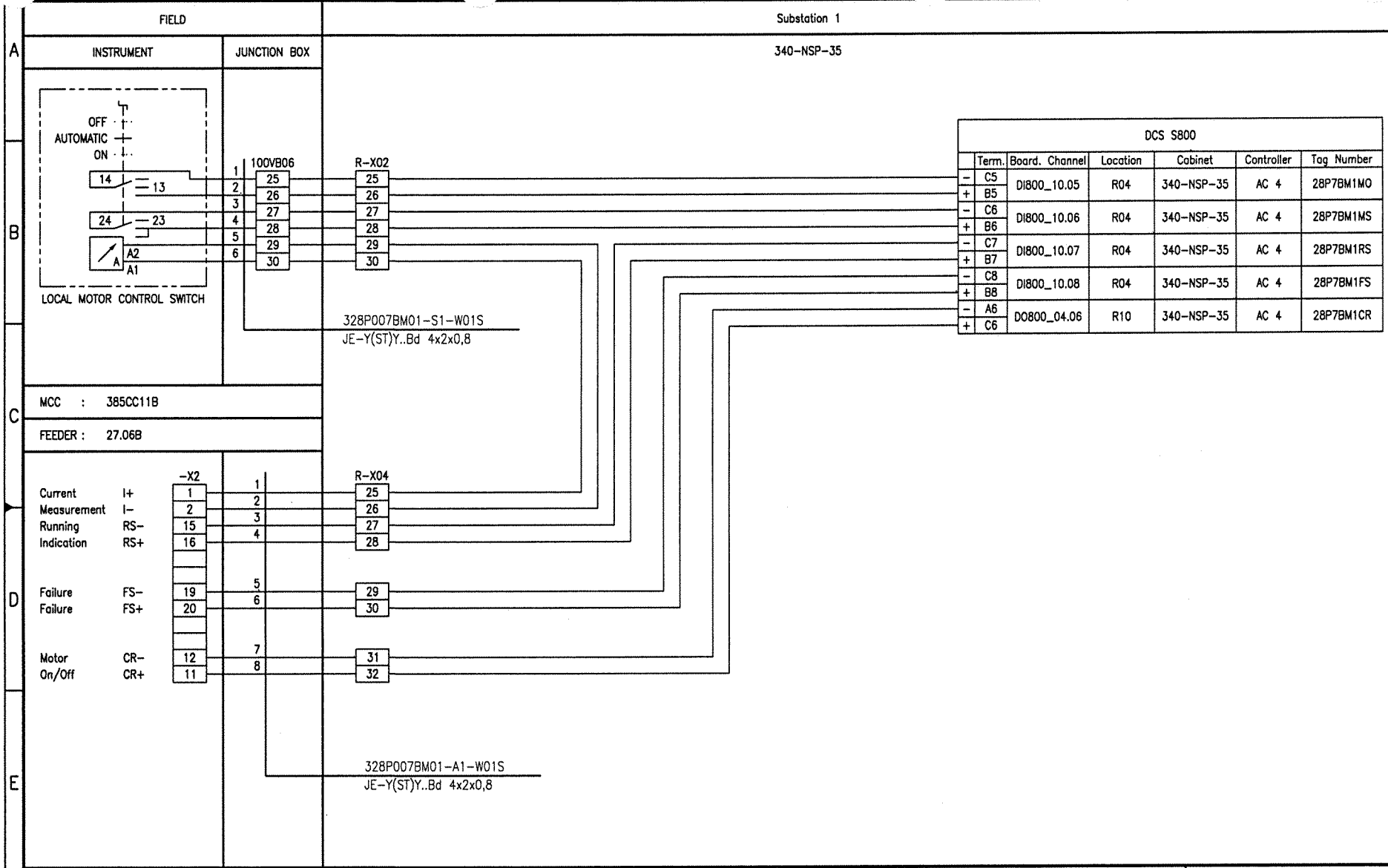

Document-ID-BAR-Code

Rev.	Date	Name (Drawn/Prepared)	Date	Name (Checked)	Date	Name (Approved)	Description	Acc. Code
01	20.09.06	Hie Hie	20.09.06	Heuer	20.09.06	Heuer	AS BUILT	

UAN	Document ID	Part	Rev.	Group
01-3040	UD-EL-G00-FS-0001		01	

Code

Uhde

All rights reserved © Uhde GmbH

Pro. Unit	TDN	Cat. Code	Acc. Code	Status
Con. Unit	Type of Document: DH	Order No.	Scale	Tot. Sheets

	Date	Name
Drawn	04.04.2005	Hielscher
Prepared	04.04.2005	Hohmann
Checked	04.04.2005	Heuer
Approved	04.04.2005	Heuer

AMMONIA / UREA PROJECT SUEZ II

Designation
Wiring diagram
328P007BM01

Store Location: Server \\p013040\013040-ADA
Store Location: Folder \EI-ET\DH_el-wiring-diag\
Store Name 01-3040_328P007BM01_000_01.dwg

ISO A3

BORDER-A3_013040.dwg / AG03A3_013040.dwg / 17.05.2004

CONTENTS

Loop Index (S 800 MOTORS) Processunit 329
Steam , Condensate & Cooling Water

Tag No.	Rev.	Crossreference: See	Remarks	File No.
329P001AM01	01			
329P001BM01	01			
329P002AM01	01			
329P002BM01	01			
329P003AM01	01			
329P003BM01	01			
329P004AM01	01			
329P004BM01	01			
329P006AM01	01			
329P006BM01	01			
329U001-M01	01			
329U001-M02	01			

I:\Ei-ET\DH_el-wiring-diag\01-3040_Wiring_diagrams_coversheet_01.doc

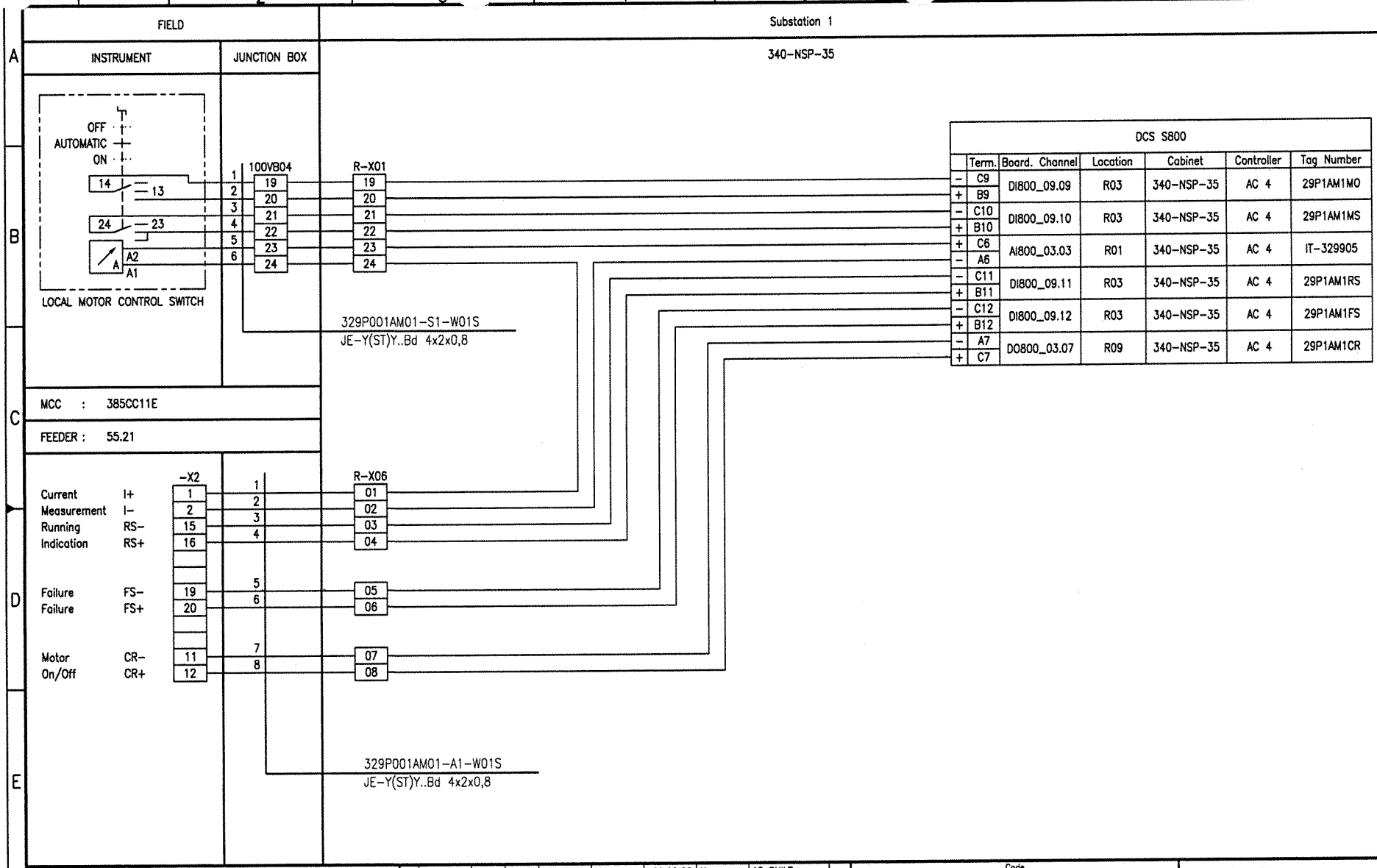

Document-ID-BAR-Code

Rev.	Date	Name (Drawn/Prepared)	Date	Name (Checked)	Date	Name (Approved)	Description	Acc. Code
01	20.09.06	Hie Hie	20.09.06	Heuer	20.09.06	Heuer	AS BUILT	

Pro. Unit	TON	Cat. Code	Acc. Code	Status
Con. Unit	Type of Document: DH	Order No.	Scale	Tot. Sheets

	Date	Name
Drawn	04.04.2005	Hielscher
Prepared	04.04.2005	Hohmann
Checked	04.04.2005	Heuer
Approved	04.04.2005	Heuer

Store Location: Server \\p013040\013040-ADA
Store Location: Folder \EI-ET\DH_el-wiring-diag\
Store Name 01-3040_329P001AM01_000_01.dwg

Code: UAN 01-3040 | Document ID UD-EL-G00-FS-0001 | Part | Rev. 01 | Group

Uhde

All rights reserved © Uhde GmbH

AMMONIA / UREA PROJECT SUEZ II

Designation
Wiring diagram
329P001AM01

ISO A3

BORDER-A3_013040.dwg / AG03A3_013040.dwg / 17.05.2004

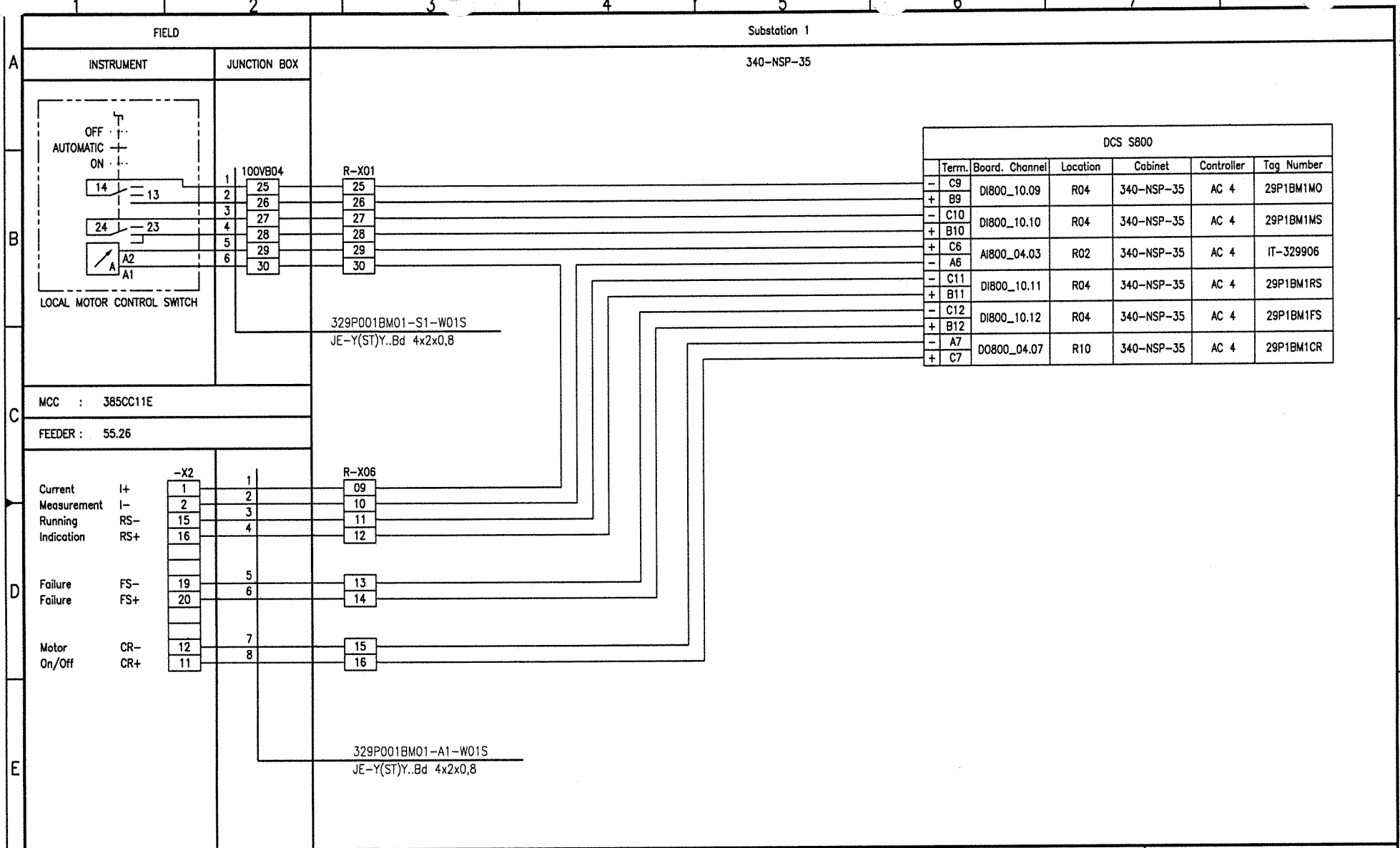

Document-ID-BAR-Code

Rev.	Date	Name (Drawn/Prepared)	Date	Name (Checked)	Date	Name (Approved)	Description	Acc. Code
01	20.09.06	Hie Hie	20.09.06	Heuer	20.09.06	Heuer	AS BUILT	

UAN	Code: Document ID	Part	Rev.	Group
01-3040	UD-EL-G00-FS-0001		01	

Uhde

All rights reserved © Uhde GmbH

Pro. Unit	TON	Cat. Code	Acc. Code	Status

Con. Unit	Type of Document	Order No.	Scale	Tot. Sheets
	DH			

	Date	Name
Drawn	04.04.2005	Hielscher
Prepared	04.04.2005	Hohmann
Checked	04.04.2005	Heuer
Approved	04.04.2005	Heuer

AMMONIA / UREA PROJECT SUEZ II

Designation
Wiring diagram
329P001BM01

Store Location: Server \\p013040\013040-ADA
Store Location: Folder \Ei-ET\DH_ei-wiring-diag\
Store Name 01-3040_329P001BM01_000_01.dwg

ISO A3

BORDER-A3_013040.dwg / AGG3A3_013040.dwg / 17.05.2004

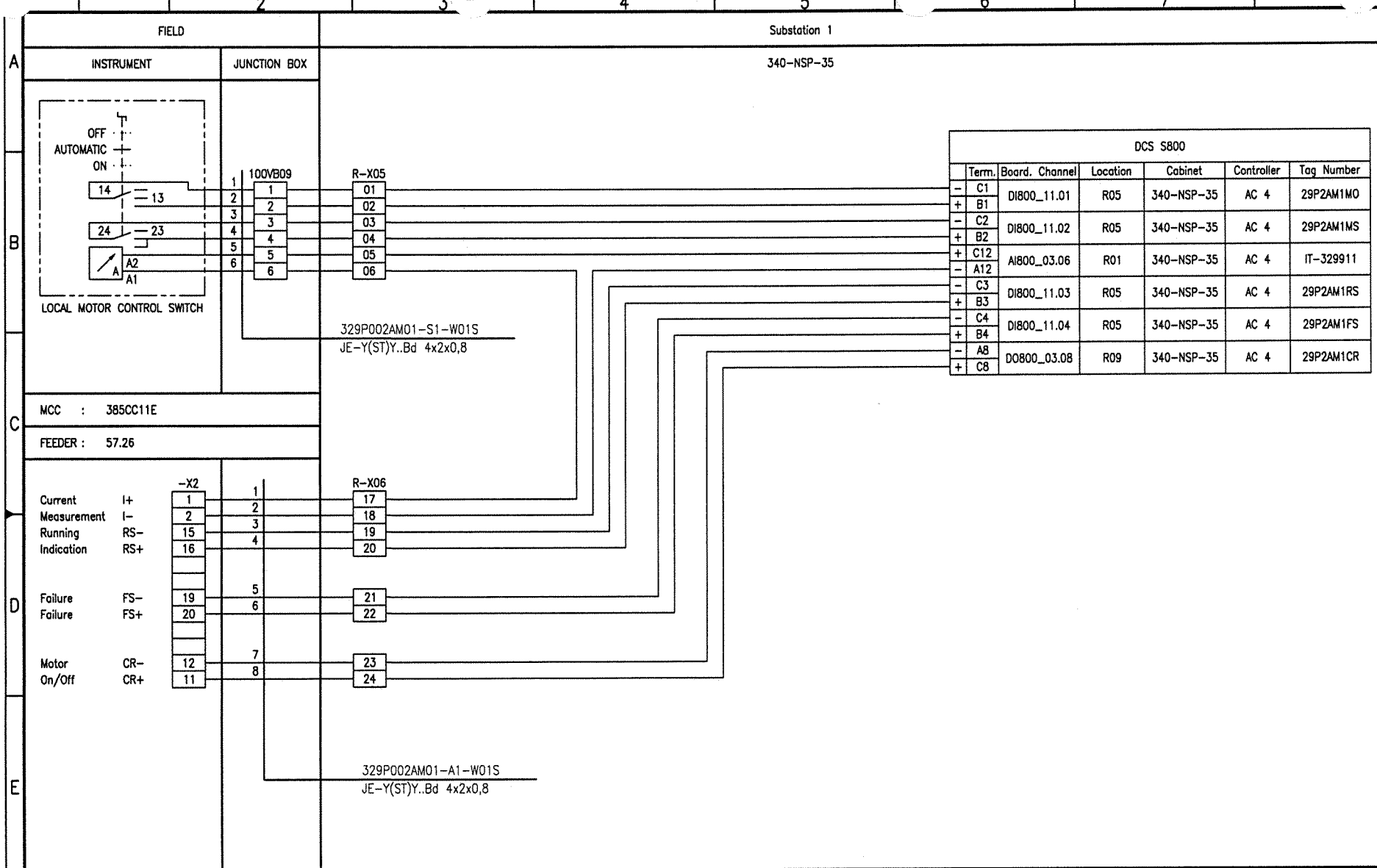

Document-ID-BAR-Code

Rev.	Date	Name (Drawn/Prepared)	Date	Name (Checked)	Date	Name (Approved)	Description	Acc. Code
01	20.09.06	Hie Hie	20.09.06	Heuer	20.09.06	Heuer	AS BUILT	

Pro. Unit	TON	Cat. Code	Acc. Code	Status
Con. Unit	Type of Document: DH	Order No.	Scale	Tot. Sheets

	Date	Name
Drawn	04.04.2005	Hielscher
Prepared	04.04.2005	Hohmann
Checked	04.04.2005	Heuer
Approved	04.04.2005	Heuer

Store Location: Server \\p013040\013040-ADA
Store Location: Folder \EI-ET\DH_el-wiring-diag\
Store Name 01-3040_329P002AM01_000_01.dwg

Code: UAN 01-3040 | Document ID UD-EL-G00-FS-0001 | Part | Rev. 01 | Group

Uhde

All rights reserved © Uhde GmbH

AMMONIA / UREA PROJECT SUEZ II

Designation: Wiring diagram 329P002AM01

ISO A3

BORDER-A3_013040.dwg / AG03A3_013040.dwg / 17.05.2004

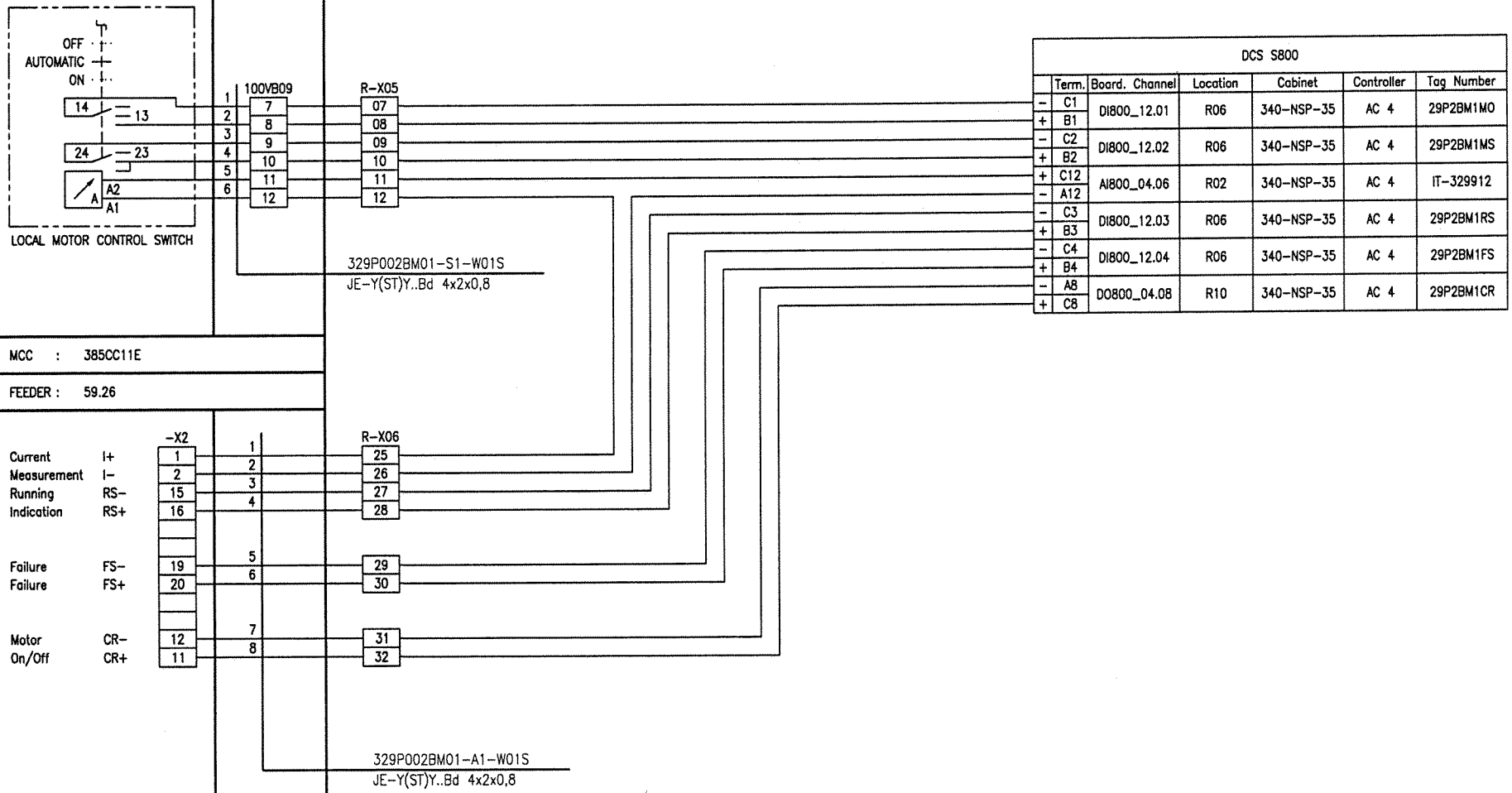

Document-ID-BAR-Code

Rev.	Date	Name (Drawn/Prepared)	Date	Name (Checked)	Date	Name (Approved)	Description	Acc. Code
01	20.09.06	Hie Hie	20.09.06	Heuer	20.09.06	Heuer	AS BUILT	

UAN	Code: Document ID	Part	Rev.	Group
01-3040	UD-EL-G00-FS-0001		01	

Uhde

All rights reserved © Uhde GmbH

Pro. Unit	TON	Cat. Code	Acc. Code	Status

Con. Unit	Type of Document	Order No.	Scale	Tot. Sheets
	DH			

	Date	Name
Drawn	04.04.2005	Hielscher
Prepared	04.04.2005	Hohmann
Checked	04.04.2005	Heuer
Approved	04.04.2005	Heuer

AMMONIA / UREA PROJECT SUEZ II

Designation
Wiring diagram
329P002BM01

Store Location: Server \\p013040\013040-ADA
Store Location: Folder \Ei-ET\DH_el-wiring-diag\
Store Name 01-3040_329P002BM01_000_01.dwg

BORDER-A3_013040.dwg / AG3A3_013040.dwg / 17.05.2004

ISO A3

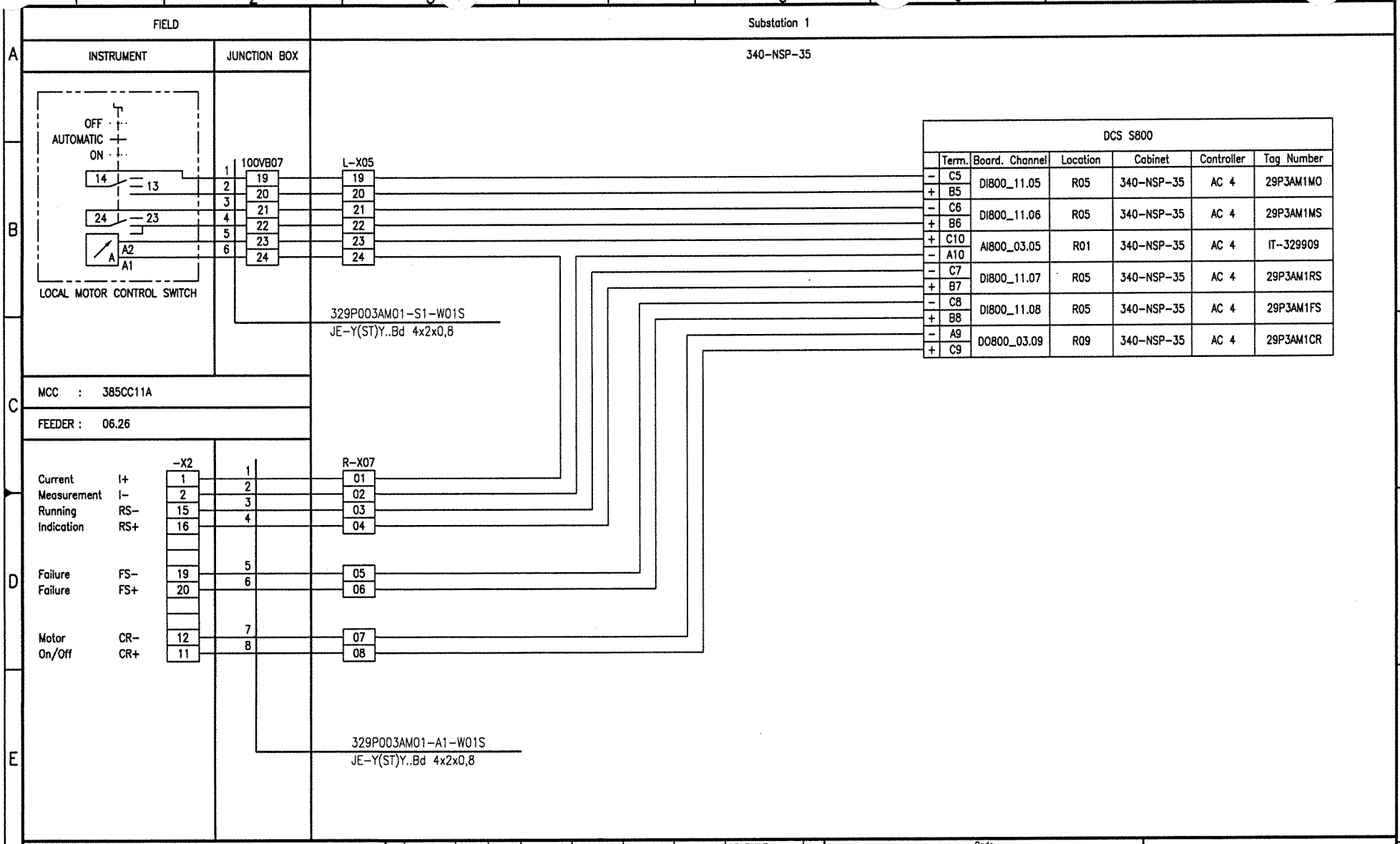
FIELD
Substation 1
INSTRUMENT
JUNCTION BOX
340-NSP-35
OFF
AUTOMATIC
ON
14
13
24
23
A2
A1
LOCAL MOTOR CONTROL SWITCH
100VB07
L-X05
329P003AM01-S1-W01S
JE-Y(ST)Y..Bd 4x2x0,8
MCC : 385CC11A
FEEDER : 06.26
-X2
R-X07
Current Measurement I+ I-
Running Indication RS- RS+
Failure FS-
Failure FS+
Motor On/Off CR- CR+
329P003AM01-A1-W01S
JE-Y(ST)Y..Bd 4x2x0,8
DCS S800
Term. Board. Channel Location Cabinet Controller Tag Number
C5 B5 DI800_11.05 R05 340-NSP-35 AC 4 29P3AM1MO
C6 B6 DI800_11.06 R05 340-NSP-35 AC 4 29P3AM1MS
C10 A10 AI800_03.05 R01 340-NSP-35 AC 4 IT-329909
C7 B7 DI800_11.07 R05 340-NSP-35 AC 4 29P3AM1RS
C8 B8 DI800_11.08 R05 340-NSP-35 AC 4 29P3AM1FS
A9 C9 DO800_03.09 R09 340-NSP-35 AC 4 29P3AM1CR
BORDER-A3_013040.dwg / A003A3_013040.dwg / 17.05.2004
Document-ID-BAR-Code
01 20.09.06 Hie Hie 20.09.06 Heuer 20.09.06 Heuer AS BUILT
Rev. Date Name Date Name Date Name Description Acc. Code
Drawn/Prepared Checked Approved
UAN 01-3040
Code Document ID UD-EL-G00-FS-0001 Part Rev. 01 Group
Uhde
All rights reserved © Uhde GmbH
Pro. Unit TON Cat. Code Acc. Code Status
Con. Unit Type of Document DH Order No. Scale Tot. Sheets
Drawn 04.04.2005 Hielscher
Prepared 04.04.2005 Hohmann
Checked 04.04.2005 Heuer
Approved 04.04.2005 Heuer
AMMONIA / UREA PROJECT SUEZ II
Designation
Wiring diagram
329P003AM01
Store Location: Server \\p013040\013040-ADA
Store Location: Folder \Ei-ET\DH_el-wiring-diag\
Store Name 01-3040_329P003AM01_000_01.dwg
ISO A3

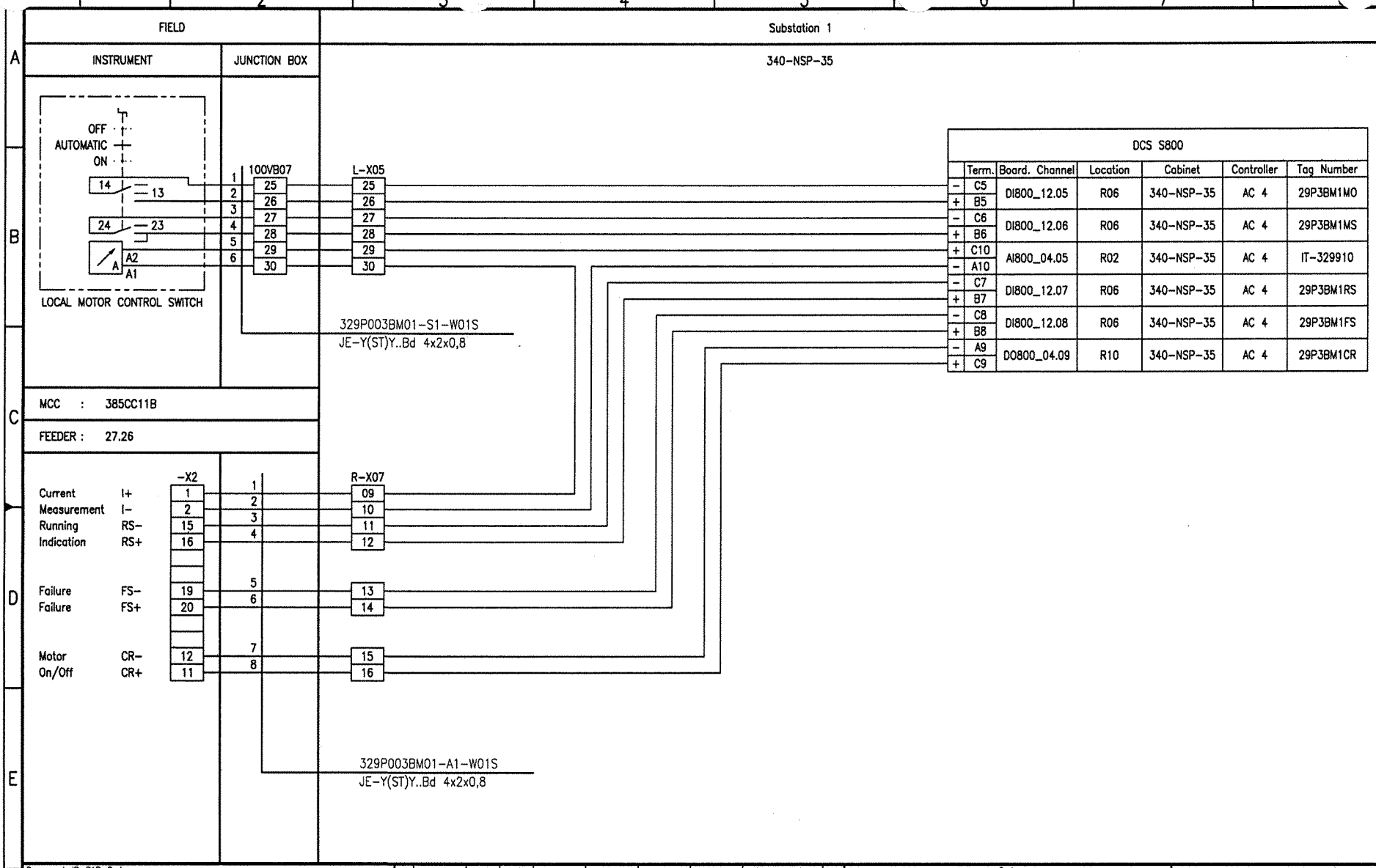

Document-ID-BAR-Code

Rev.	Date	Name (Drawn/Prepared)	Date	Name (Checked)	Date	Name (Approved)	Description	Acc. Code
01	20.09.06	Hie Hie	20.09.06	Heuer	20.09.06	Heuer	AS BUILT	

UAN	Document ID	Part	Rev.	Group
01-3040	UD-EL-G00-FS-0001		01	

Code

Uhde

All rights reserved © Uhde GmbH

Pro. Unit	TON	Cat. Code	Acc. Code	Status
Con. Unit	Type of Document: DH	Order No.	Scale	Tot. Sheets

	Date	Name
Drawn	04.04.2005	Hielscher
Prepared	04.04.2005	Hohmann
Checked	04.04.2005	Heuer
Approved	04.04.2005	Heuer

AMMONIA / UREA PROJECT SUEZ II

Designation
Wiring diagram
329P003BM01

Store Location: Server \\p013040\013040-ADA
Store Location: Folder \Ei-ET\DH_el-wiring-diag\
Store Name 01-3040_329P003BM01_000_01.dwg

ISO A3

BORDER-A3_013040.dwg / A003A3_013040.dwg / 17.05.2004

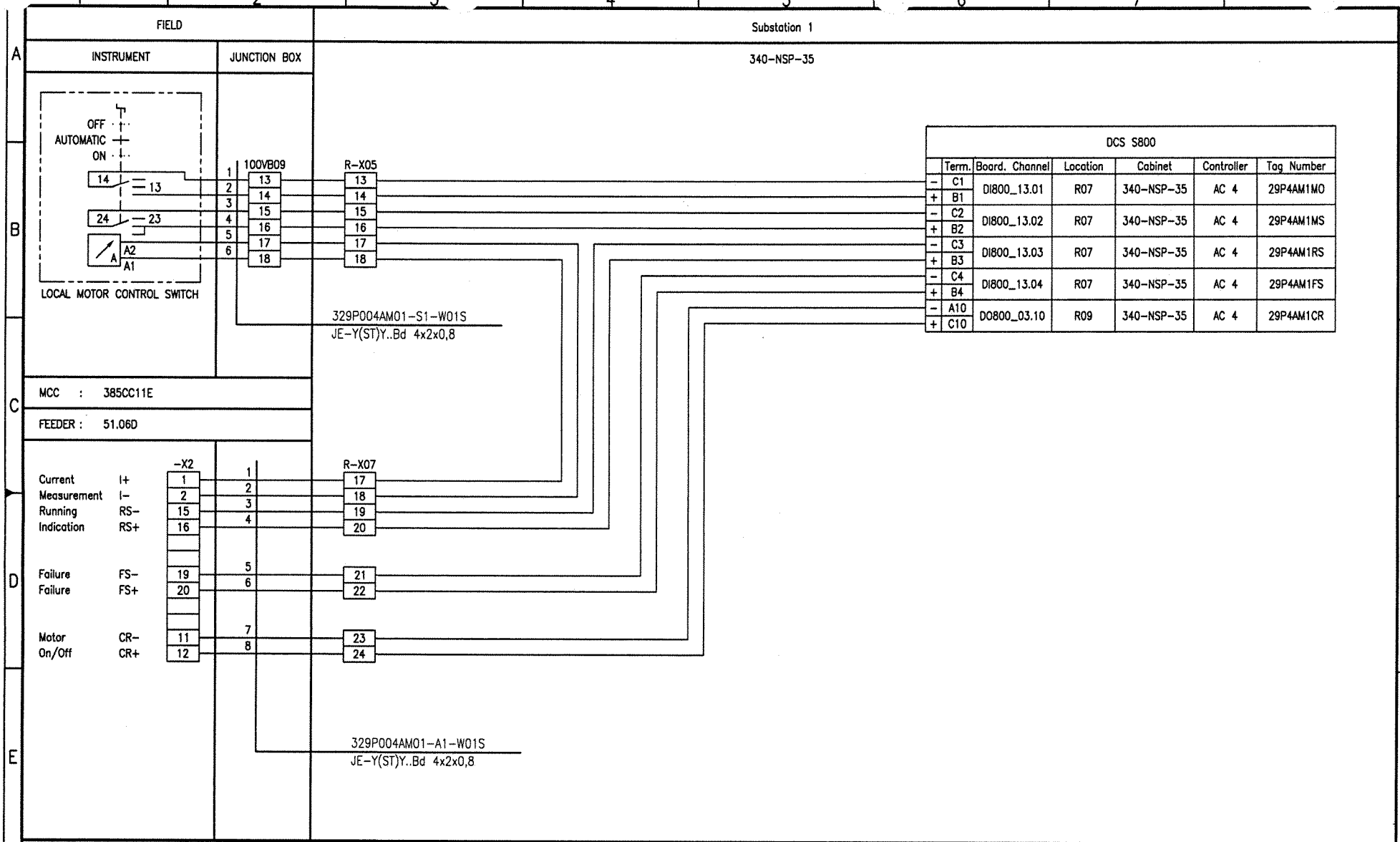
FIELD
Substation 1
INSTRUMENT
JUNCTION BOX
340-NSP-35
OFF
AUTOMATIC
ON
14
13
24
23
A2
A1
LOCAL MOTOR CONTROL SWITCH
100VB09
R-X05
329P004AM01-S1-W01S
JE-Y(ST)Y..Bd 4x2x0,8
MCC : 385CC11E
FEEDER : 51.06D
-X2
R-X07
Current Measurement I+ I-
Running Indication RS- RS+
Failure FS-
Failure FS+
Motor On/Off CR- CR+
329P004AM01-A1-W01S
JE-Y(ST)Y..Bd 4x2x0,8
DCS S800
Term. Board. Channel Location Cabinet Controller Tag Number
C1 B1 DI800_13.01 R07 340-NSP-35 AC 4 29P4AM1MO
C2 B2 DI800_13.02 R07 340-NSP-35 AC 4 29P4AM1MS
C3 B3 DI800_13.03 R07 340-NSP-35 AC 4 29P4AM1RS
C4 B4 DI800_13.04 R07 340-NSP-35 AC 4 29P4AM1FS
A10 C10 DO800_03.10 R09 340-NSP-35 AC 4 29P4AM1CR
BORDER-A3_013040.dwg / AC03A3_013040.dwg / 17.05.2004
Document-ID-BAR-Code
01 20.09.06 Hie Hie 20.09.06 Heuer 20.09.06 Heuer AS BUILT
Rev. Date Name Date Name Date Name Description Acc. Code
Drawn/Prepared Checked Approved
UAN 01-3040
Code Document ID UD-EL-G00-FS-0001 Part Rev. 01 Group
Uhde
All rights reserved © Uhde GmbH
Pro. Unit TON Cat. Code Acc. Code Status
Con. Unit Type of Document DH Order No. Scale Tot. Sheets
Date Name
Drawn 04.04.2005 Hielscher
Prepared 04.04.2005 Hohmann
Checked 04.04.2005 Heuer
Approved 04.04.2005 Heuer
AMMONIA / UREA PROJECT SUEZ II
Designation
Wiring diagram 329P004AM01
Store Location: Server \\p013040\013040-ADA
Store Location: Folder \Ei-ET\DH_el-wiring-diag\
Store Name 01-3040_329P004AM01_000_01.dwg
ISO A3

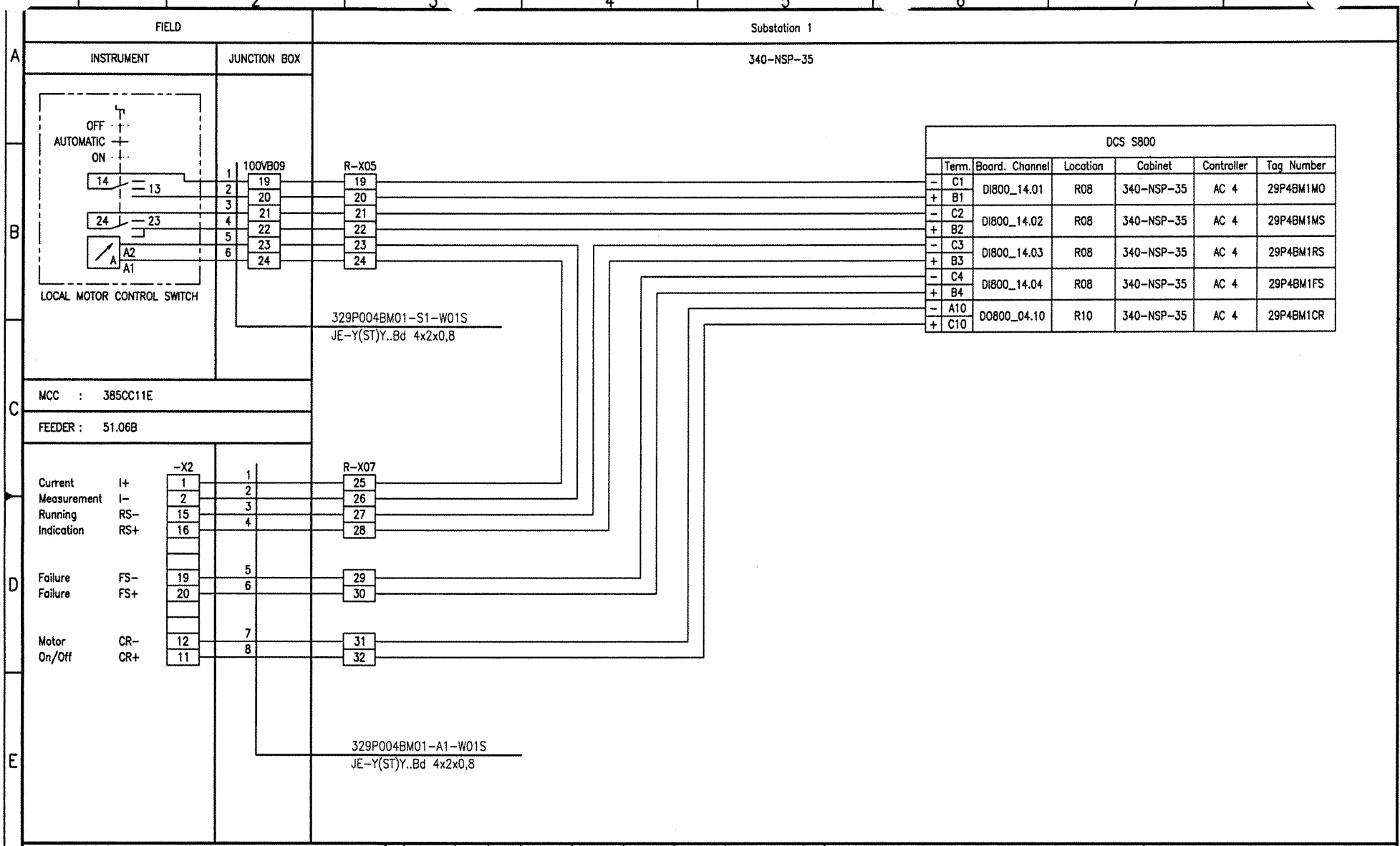
FIELD
Substation 1
INSTRUMENT
JUNCTION BOX
340-NSP-35
OFF
AUTOMATIC
ON
14
13
24
23
A2
A1
LOCAL MOTOR CONTROL SWITCH
100VB09
R-X05
329P004BM01-S1-W01S
JE-Y(ST)Y..Bd 4x2x0,8
MCC : 385CC11E
FEEDER : 51.06B
-X2
R-X07
Current Measurement I+ I-
Running Indication RS- RS+
Failure FS-
Failure FS+
Motor On/Off CR- CR+
329P004BM01-A1-W01S
JE-Y(ST)Y..Bd 4x2x0,8
DCS S800
Term. Board. Channel Location Cabinet Controller Tag Number
C1 B1 DI800_14.01 R08 340-NSP-35 AC 4 29P4BM1MO
C2 B2 DI800_14.02 R08 340-NSP-35 AC 4 29P4BM1MS
C3 B3 DI800_14.03 R08 340-NSP-35 AC 4 29P4BM1RS
C4 B4 DI800_14.04 R08 340-NSP-35 AC 4 29P4BM1FS
A10 C10 DO800_04.10 R10 340-NSP-35 AC 4 29P4BM1CR
Document-ID-BAR-Code
01 20.09.06 Hie Hie 20.09.06 Heuer 20.09.06 Heuer AS BUILT
Rev. Date Name Drawn/Prepared Date Name Checked Date Name Approved Description Acc. Code
UAN 01-3040
Code Document ID UD-EL-G00-FS-0001 Part Rev. 01 Group
Uhde
All rights reserved © Uhde GmbH
Pro. Unit TON Cat. Code Acc. Code Status
Con. Unit Type of Document DH Order No. Scale Tot. Sheets
Date Name
Drawn 04.04.2005 Hielscher
Prepared 04.04.2005 Hohmann
Checked 04.04.2005 Heuer
Approved 04.04.2005 Heuer
AMMONIA / UREA PROJECT SUEZ II
Designation
Wiring diagram 329P004BM01
Store Location: Server \\p013040\013040-ADA
Store Location: Folder \Ei-ET\DH_el-wiring-diag\
Store Name 01-3040_329P004BM01_000_01.dwg
ISO A3
BORDER-A3_013040.dwg / A0G3A3_013040.dwg / 17.05.2004

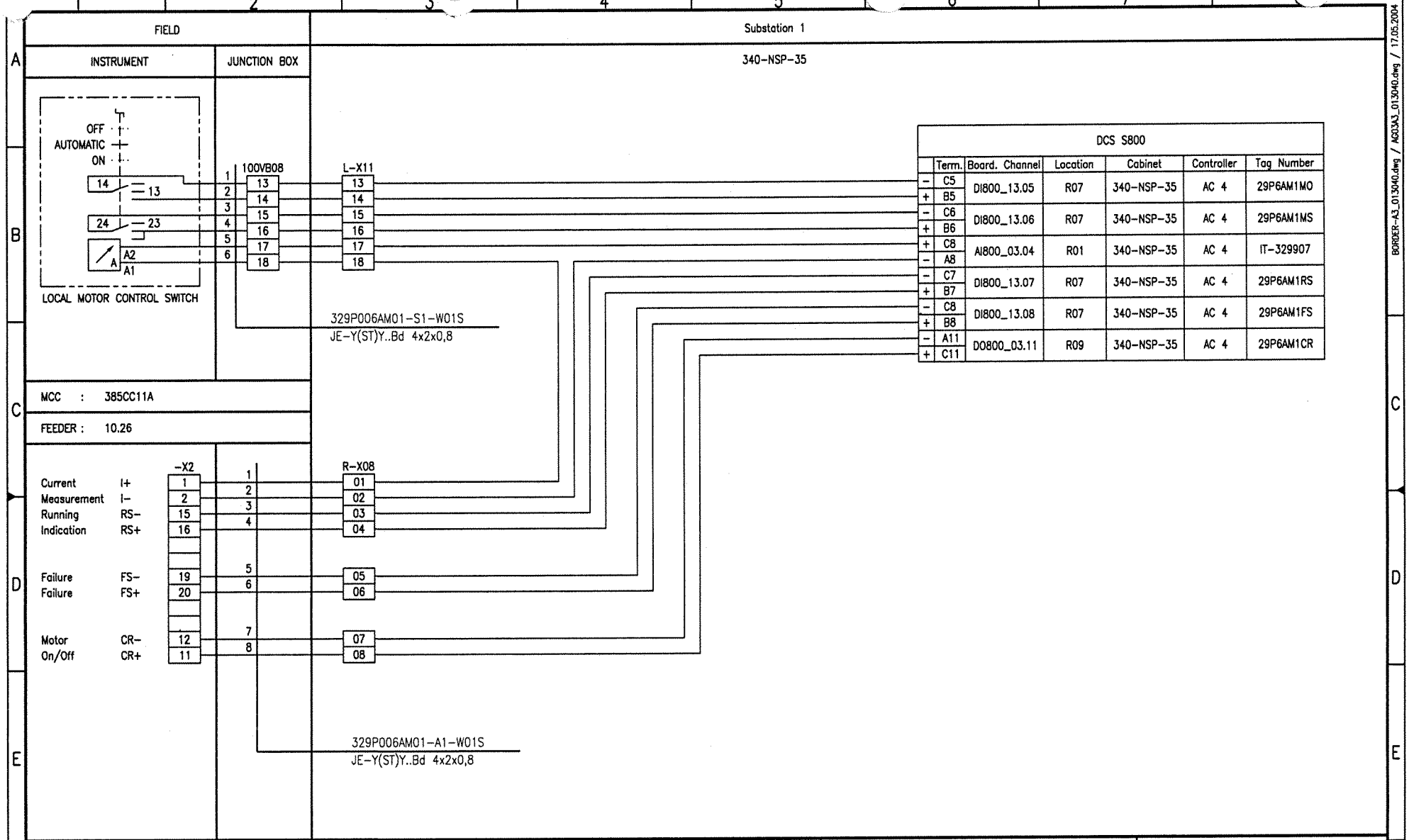

Document-ID-BAR-Code

Rev.	Date	Name	Date	Name	Date	Name	Description	Acc. Code
01	20.09.06	Hie (Drawn/Prepared)	20.09.06	Heuer (Checked)	20.09.06	Heuer (Approved)	AS BUILT	

UAN	Document ID	Part	Rev.	Group
01-3040	UD-EL-G00-FS-0001		01	

Code

Uhde

All rights reserved © Uhde GmbH

Pro. Unit	TON	Cat. Code	Acc. Code	Status

Con. Unit	Type of Document	Order No.	Scale	Tot. Sheets
	DH			

	Date	Name
Drawn	04.04.2005	Hielscher
Prepared	04.04.2005	Hohmann
Checked	04.04.2005	Heuer
Approved	04.04.2005	Heuer

AMMONIA / UREA PROJECT SUEZ II

Designation
Wiring diagram
329P006AM01

Store Location: Server \\p013040\013040-ADA
Store Location: Folder \EI-ET\DH_el-wiring-diag\
Store Name 01-3040_329P006AM01_000_01.dwg

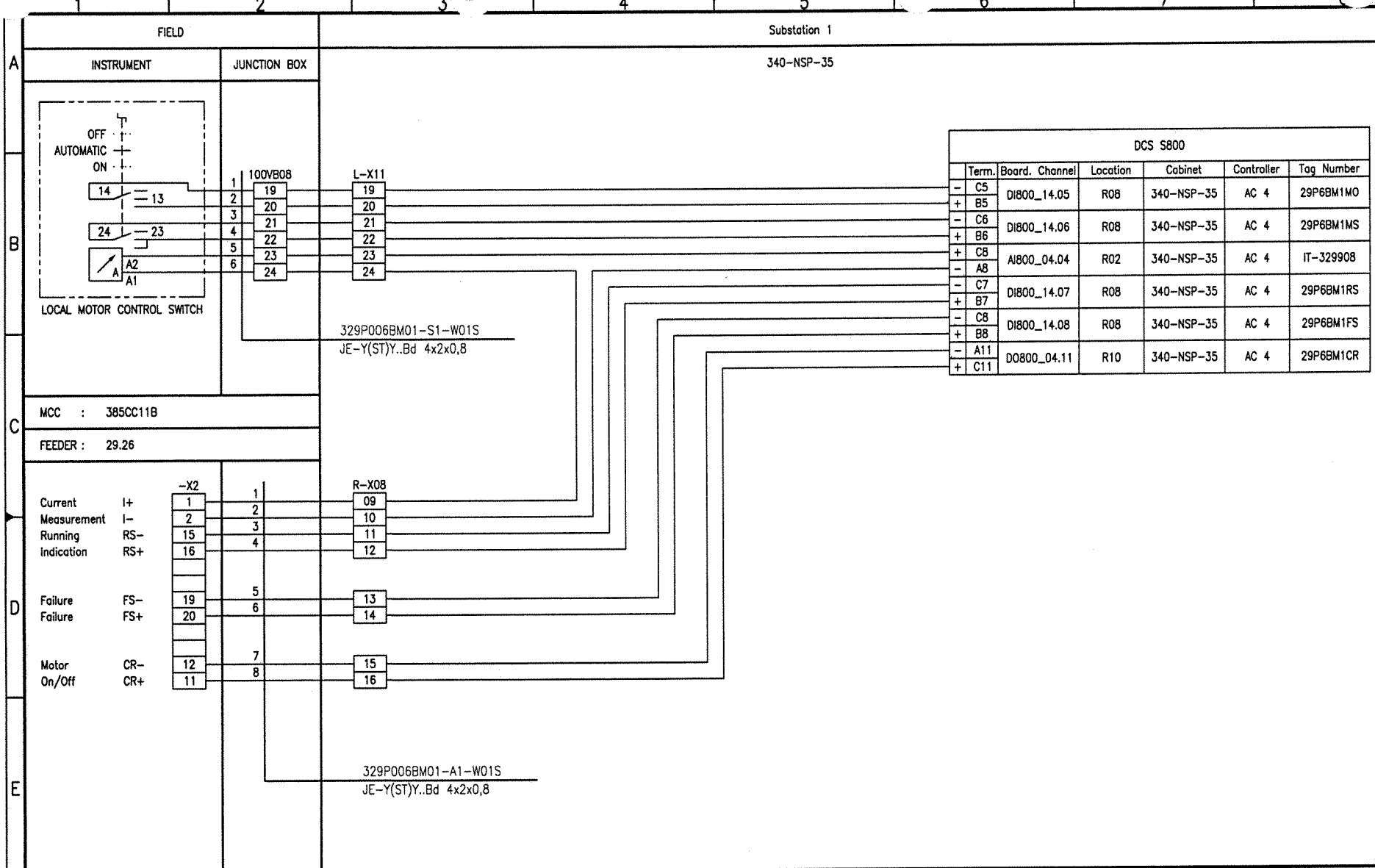

Document-ID-BAR-Code

Rev.	Date	Name	Date	Name	Date	Name	Description	Acc. Code
01	20.09.06	Hie	20.09.06	Heuer	20.09.06	Heuer	AS BUILT	
	Drawn/Prepared		Checked		Approved			

Pro. Unit	TON	Cat. Code	Acc. Code	Status
Can. Unit	Type of Document: DH	Order No.	Scale	Tot. Sheets

	Date	Name
Drawn	04.04.2005	Hielscher
Prepared	04.04.2005	Hohmann
Checked	04.04.2005	Heuer
Approved	04.04.2005	Heuer

Store Location: Server \\p013040\013040-ADA
Store Location: Folder \Ei-ET\DH_el-wiring-diag\
Store Name 01-3040_329P006BM01_000_01.dwg

Code: UAN 01-3040 | Document ID UD-EL-G00-FS-0001 | Part | Rev. 01 | Group

Uhde

All rights reserved © Uhde GmbH

AMMONIA / UREA PROJECT SUEZ II

Designation: Wiring diagram 329P006BM01

ISO A3

BORDER-A3_013040.dwg / AG03A3_013040.dwg / 17.05.2004

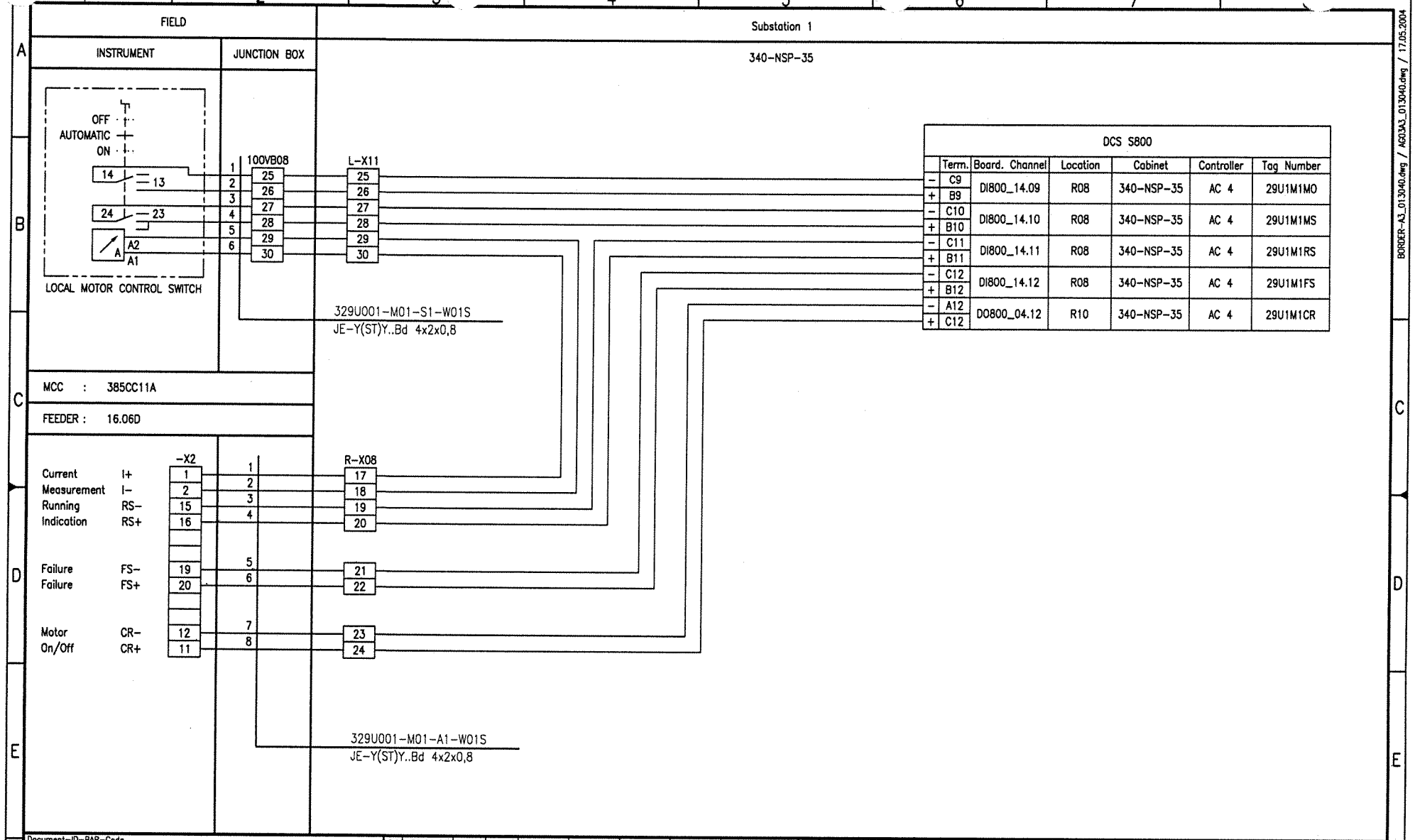
FIELD
Substation 1
INSTRUMENT
JUNCTION BOX
340-NSP-35
OFF
AUTOMATIC
ON
14
13
24
23
A2
A1
LOCAL MOTOR CONTROL SWITCH
100VB08
L-X11
329U001-M01-S1-W01S
JE-Y(ST)Y..Bd 4x2x0,8
MCC : 385CC11A
FEEDER : 16.06D
-X2
R-X08
Current Measurement I+ I-
Running Indication RS- RS+
Failure FS- Failure FS+
Motor On/Off CR- CR+
329U001-M01-A1-W01S
JE-Y(ST)Y..Bd 4x2x0,8
DCS S800
Term. Board. Channel Location Cabinet Controller Tag Number
C9 B9 DI800_14.09 R08 340-NSP-35 AC 4 29U1M1MO
C10 B10 DI800_14.10 R08 340-NSP-35 AC 4 29U1M1MS
C11 B11 DI800_14.11 R08 340-NSP-35 AC 4 29U1M1RS
C12 B12 DI800_14.12 R08 340-NSP-35 AC 4 29U1M1FS
A12 C12 DO800_04.12 R10 340-NSP-35 AC 4 29U1M1CR
Document-ID-BAR-Code
01 20.09.06 Hie Hie 20.09.06 Heuer 20.09.06 Heuer AS BUILT
Rev. Date Name Drawn/Prepared Date Name Checked Date Name Approved Description Acc. Code
UAN 01-3040
Code Document ID UD-EL-G00-FS-0001 Part Rev. 01 Group
Uhde
All rights reserved © Uhde GmbH
Pro. Unit TON Cat. Code Acc. Code Status
Con. Unit Type of Document DH Order No. Scale Tot. Sheets
Date Name
Drawn 04.04.2005 Hielscher
Prepared 04.04.2005 Hohmann
Checked 04.04.2005 Heuer
Approved 04.04.2005 Heuer
AMMONIA / UREA PROJECT SUEZ II
Designation
Wiring diagram 329U001-M01
Store Location: Server \\p013040\013040-ADA
Store Location: Folder \EI-ET\DH_el-wiring-diag\
Store Name 01-3040_329U001-M01_000_01.dwg
ISO A3
BORDER-A3_013040.dwg / AG03A3_013040.dwg / 17.05.2004

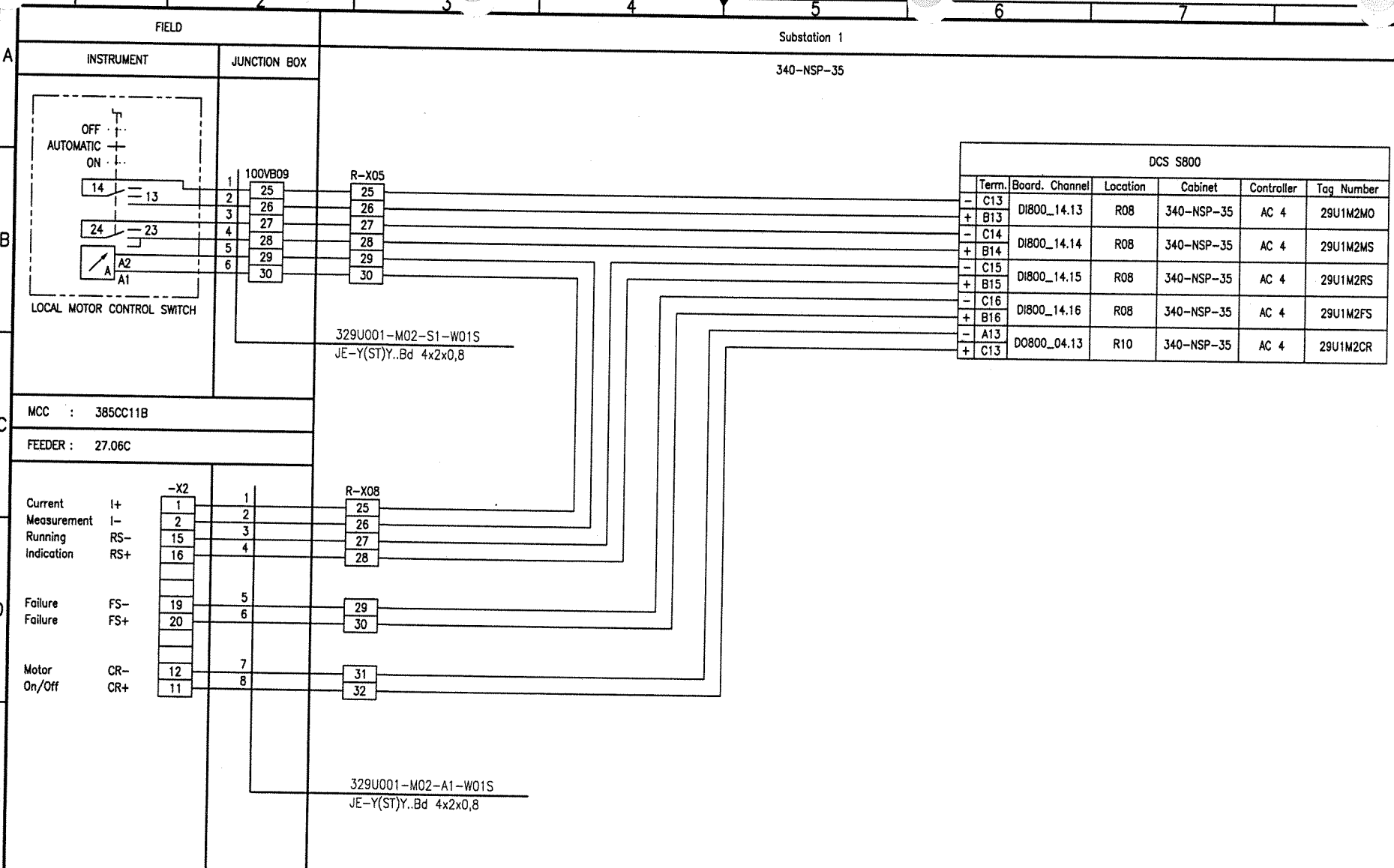

DCS S800

	Term.	Board. Channel	Location	Cabinet	Controller	Tag Number
-	C13	DI800_14.13	R08	340-NSP-35	AC 4	29U1M2MO
+	B13					
-	C14	DI800_14.14	R08	340-NSP-35	AC 4	29U1M2MS
+	B14					
-	C15	DI800_14.15	R08	340-NSP-35	AC 4	29U1M2RS
+	B15					
-	C16	DI800_14.16	R08	340-NSP-35	AC 4	29U1M2FS
+	B16					
-	A13	DO800_04.13	R10	340-NSP-35	AC 4	29U1M2CR
+	C13					

Document-ID-BAR-Code

Rev.	Date	Name	Date	Name	Date	Name	Description	Acc. Code
01	20.09.06	Hie Hie	20.09.06	Heuer	20.09.06	Heuer	AS BUILT	
	Drawn/Prepared		Checked		Approved			

UAN	Document ID	Part	Rev.	Group
01-3040	UD-EL-G00-FS-0001		01	

Code

Uhde

All rights reserved © Uhde GmbH

Pro. Unit	TON	Cat. Code	Acc. Code	Status
Con. Unit	Type of Document: DH	Order No.	Scale	Tot. Sheets

	Date	Name
Drawn	04.04.2005	Hielscher
Prepared	04.04.2005	Hohmann
Checked	04.04.2005	Heuer
Approved	04.04.2005	Heuer

AMMONIA / UREA PROJECT SUEZ II

Designation
Wiring diagram
329U001-M02

Store Location: Server \\p013040\013040-ADA
Store Location: Folder \Ei-ET\DH_el-wiring-diag\
Store Name 01-3040_329U001-M02_000_01.dwg

ISO A3

BORDER-A3_013040.dwg / AG03A3_013040.dwg / 17.05.2004

CONTENTS

Loop Index (S 800 MOTORS) Processunit 335 Granulation

Tag No.	Rev.	Crossreference: See	Remarks	File No.
335F001-M01	01			
335F001-M02	01			
335F002-M01	01			
335H002AM01	01			
335H002BM01	01			
335H008AM01-M02	01			
335H008BM01-M02	01			
335H008CM01-M02	01			
335H008DM01-M02	01			
335H011-M01	01			
335H012-M01	01			
335H013-H01	00			
335H013-M01	00			
335K001-M01	01			
335K002-EH1	01			
335K002-M01	01			
335K002-M02	01			
335K002-M03	01			
335K002-M04	01			
335K002-M05	01			
335K002-M06	01			
335K003-M01	01			
335K004-M01	01			
335K005-M01	01			
335K006-M01	01			
335K007-M01	01			
335N001-M01	01			
335P001AM01	01			
335P001BM01	01			
335P002AM01	01			
335P002BM01	01			
335P003AM01	01			
335P003BM01	01			
335P004AM01	01			
335P004BM01	01			
335P005AM01	01			
335P005BM01	01			
335P006-M01	01			
335S004AM01	01			
335S004BM01	01			
335S004CM01	01			
335S004DM01	01			
335S006ARM1	00			
335S006BRM1	00			

I:\Ei-ET\DH_el-wiring-diag\01-3040_Wiring_diagrams_coversheet_01.doc

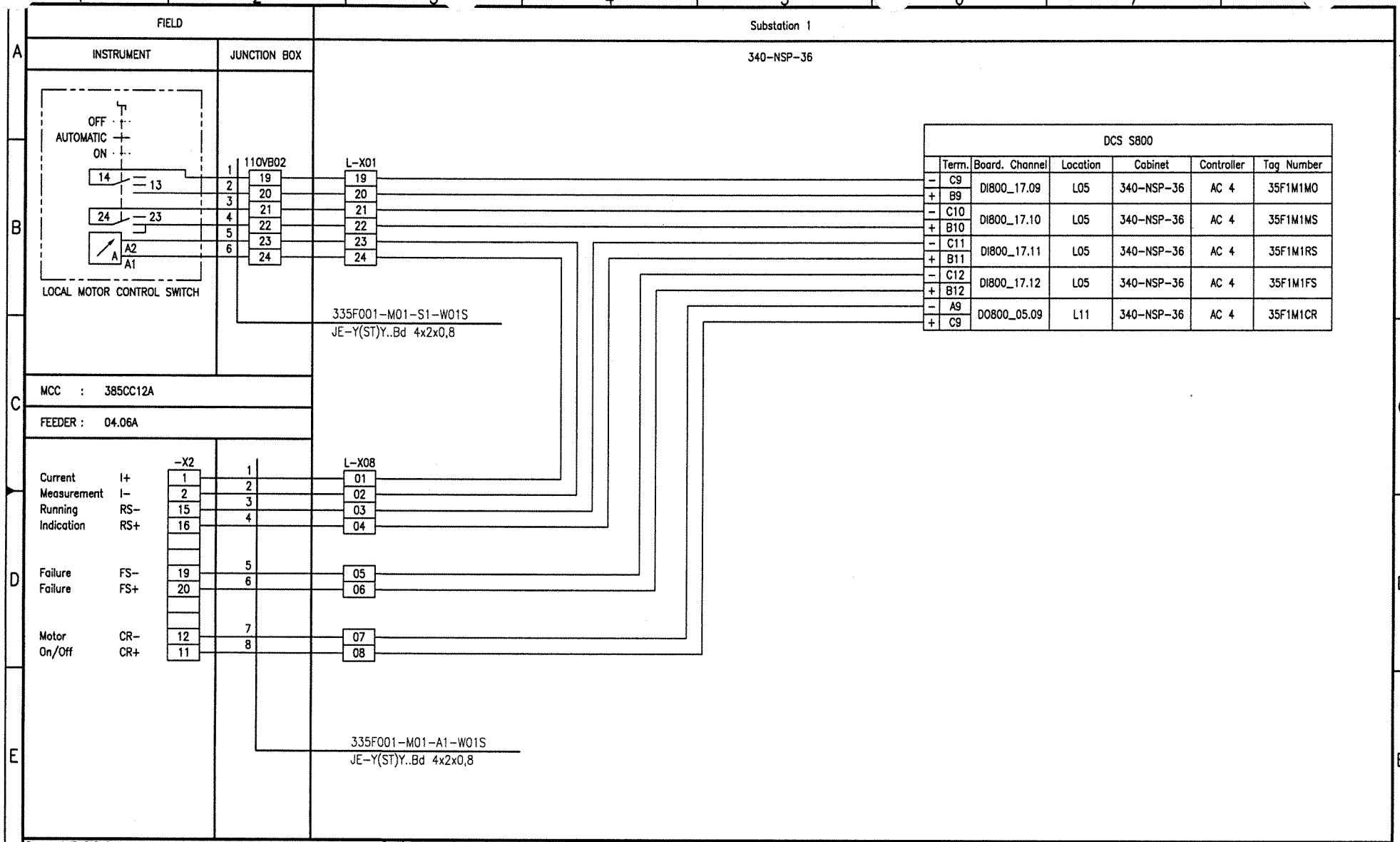

Document-ID-BAR-Code

Rev.	Date	Name (Drawn/Prepared)	Date	Name (Checked)	Date	Name (Approved)	Description	Acc. Code
01	20.09.06	Hie Hie	20.09.06	Heuer	20.09.06	Heuer	AS BUILT	

UAN	Document ID	Part	Rev.	Group
01-3040	UD-EL-G00-FS-0001		01	

Code

Uhde

All rights reserved © Uhde GmbH

Pro. Unit	TON	Cat. Code	Acc. Code	Status
Con. Unit	Type of Document: DH	Order No.	Scale	Tot. Sheets

	Date	Name
Drawn	04.04.2005	Hielscher
Prepared	04.04.2005	Hohmann
Checked	04.04.2005	Heuer
Approved	04.04.2005	Heuer

AMMONIA / UREA PROJECT SUEZ II

Designation
Wiring diagram
335F001-M01

Store Location: Server \\p013040\013040-ADA
Store Location: Folder \Ei-ET\DH_el-wiring-diag\
Store Name 01-3040_335F001-M01_000_01.dwg

ISO A3

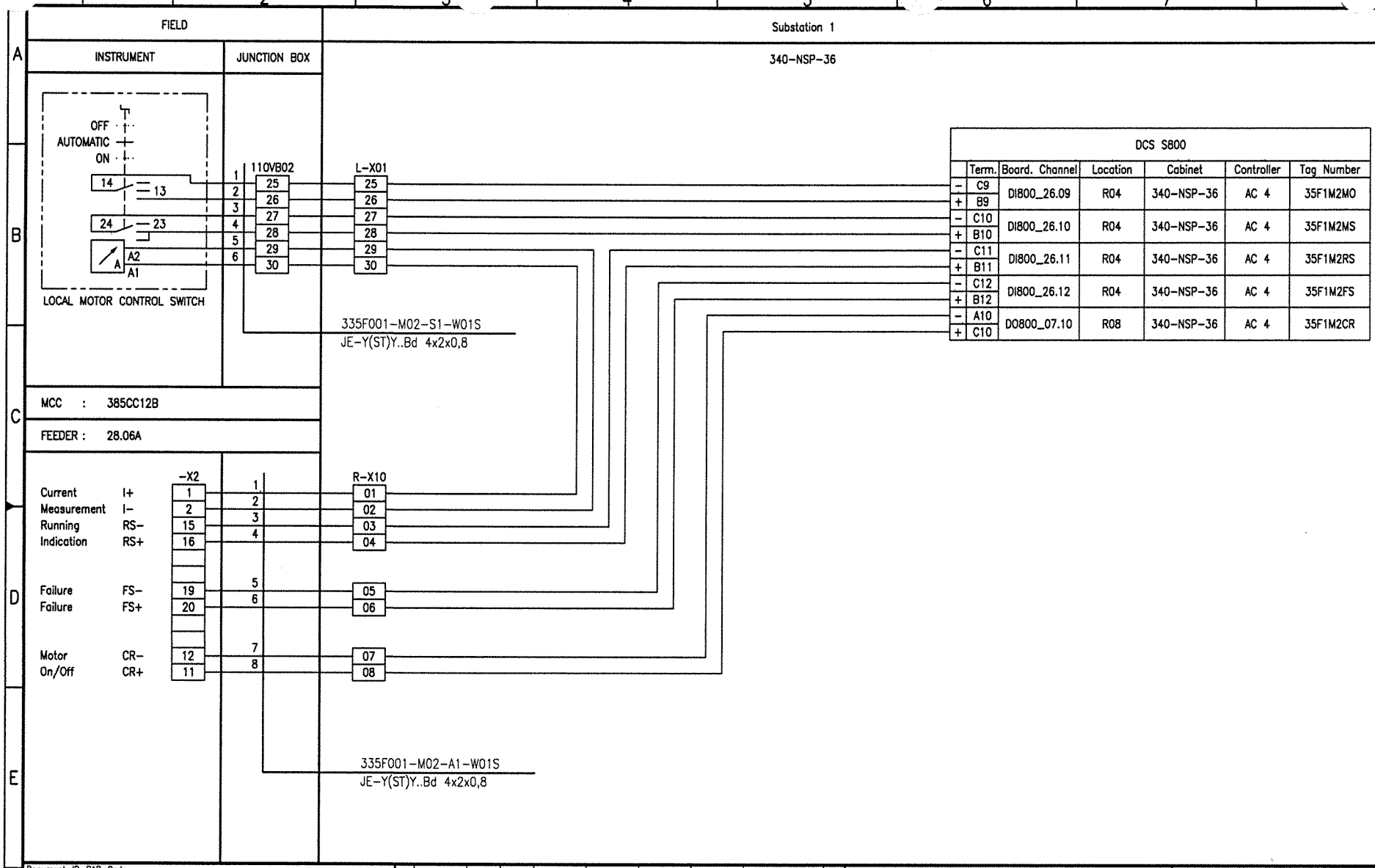

Document-ID-BAR-Code

Rev.	Date	Name (Drawn/Prepared)	Date	Name (Checked)	Date	Name (Approved)	Description	Acc. Code
01	20.09.06	Hie Hie	20.09.06	Heuer	20.09.06	Heuer	AS BUILT	

UAN 01-3040 | Code: Document ID UD-EL-G00-FS-0001 | Part | Rev. 01 | Group

Uhde

All rights reserved © Uhde GmbH

Pro. Unit | TON | Cat. Code | Acc. Code | Status

Con. Unit | Type of Document DH | Order No. | Scale | Tot. Sheets

	Date	Name
Drawn	04.04.2005	Hielscher
Prepared	04.04.2005	Hohmann
Checked	04.04.2005	Heuer
Approved	04.04.2005	Heuer

AMMONIA / UREA PROJECT SUEZ II

Designation: Wiring diagram 335F001-M02

Store Location: Server \\p013040\013040-ADA
Store Location: Folder \Ei-ET\DH_el-wiring-diag\
Store Name 01-3040_335F001-M02_000_01.dwg

ISO A3

BORDER-A3_013040.dwg / AG13A3_013040.dwg / 17.05.2004

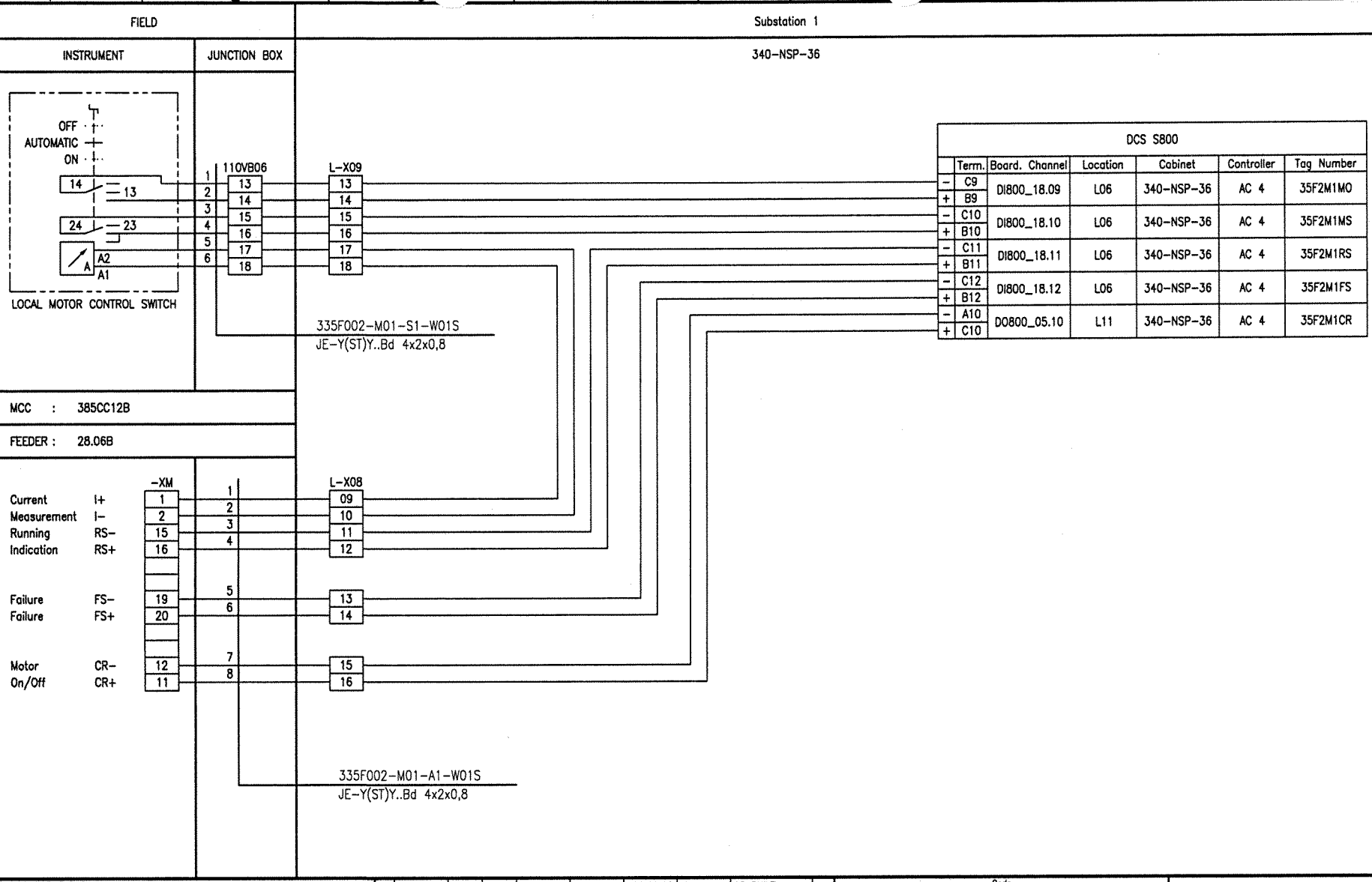

Document-ID-BAR-Code

Rev.	Date	Name	Date	Name	Date	Name	Description	Acc. Code
01	20.09.06	Hie	20.09.06	Heuer	20.09.06	Heuer	AS BUILT	
	Drawn/Prepared		Checked		Approved			

UAN	Document ID	Part	Rev.	Group
01-3040	UD-EL-G00-FS-0001		01	

Code

Uhde

All rights reserved © Uhde GmbH

Pro. Unit	TON	Cat. Code	Acc. Code	Status
Con. Unit	Type of Document: DH	Order No.	Scale	Tot. Sheets

	Date	Name
Drawn	04.04.2005	Hielscher
Prepared	04.04.2005	Hohmann
Checked	04.04.2005	Heuer
Approved	04.04.2005	Heuer

AMMONIA / UREA PROJECT SUEZ II

Designation
Wiring diagram
335F002-M01

Store Location: Server \\p013040\013040-ADA
Store Location: Folder \Ei-ET\DH_el-wiring-diag\
Store Name 01-3040_335F002-M01_000_01.dwg

ISO A3

BORDER-A3_013040.dwg / A03A3_013040.dwg / 17.05.2004

FIELD | Substation 1

INSTRUMENT | JUNCTION BOX | 340-NSP-36

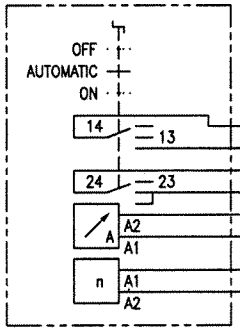

LOCAL MOTOR CONTROL SWITCH

100VB09

L-X10

335H002AM01-S1-W01S
JE-Y(ST)Y..Bd 4x2x0,8

	Term.	Board. Channel	Location	Cabinet	Controller	Tag Number
DCS S800						
−	C5	DI800_17.05	L05	340-NSP-36	AC 4	25H2AM1MO
+	B5					
−	C6	DI800_17.06	L05	340-NSP-36	AC 4	25H2AM1MS
+	B6					
−	C7	DI800_17.07	L05	340-NSP-36	AC 4	25H2AM1RS
+	B7					
−	C8	DI800_17.08	L05	340-NSP-36	AC 4	25H2AM1FS
+	B8					
−	A5	DO800_05.05	L11	340-NSP-36	AC 4	25H2AM1CR
+	C5					

MCC : 385RS11-4

FEEDER : 335H002AM01-U

-X2

L-X12

Current Measurement	I+	62	1
	I−	63	2
Running Indication	RS−	32	3
	RS+	33	4
Failure	FS−	38	5
Failure	FS+	36	6
Motor On/Off	CR− K33	A2	7
	CR+ K33	A1	8
	N+	60	9
	N−	61	10
	F+	51	11
	F−	50	12

335H002AM01-A1-W01S
JE-Y(ST)Y..Bd 12x2x0,8

L-X11 27 28

Control Building / Rack Room

X-340-NSP-14 3 4

	Term.	Board. Channel	Location	Cabinet	Ex(i) Board	Tag Number
DCS S100						
+	2	AXR16.10	H220.2A	340-NSP-14	AX16 (A0) Pos. 5.2	HS-335636-0
−	5					

Document-ID-BAR-Code

Rev.	Date	Name (Drawn/Prepared)	Date	Name (Checked)	Date	Name (Approved)	Description	Acc. Code
01	20.09.06	Hie Hie	20.09.06	Heuer	20.09.06	Heuer	AS BUILT	

UAN	Document ID	Part	Rev.	Group
01-3040	UD-EL-G00-FS-0001		01	

Code

Uhde

All rights reserved © Uhde GmbH

Pro. Unit	TON	Cat. Code	Acc. Code	Status
Con. Unit	Type of Document: DH	Order No.	Scale	Tot. Sheets

	Date	Name
Drawn	04.04.2005	Hielscher
Prepared	04.04.2005	Hohmann
Checked	04.04.2005	Heuer
Approved	04.04.2005	Heuer

AMMONIA / UREA PROJECT SUEZ II

Designation
Wiring diagram
335H002AM01

Store Location: Server \\p013040\013040-ADA
Store Location: Folder \Ei-ET\DH_el-wiring-diag\
Store Name 01-3040_335H002AM01_000_01.dwg

ISO A3

BORDER-A3_013040.dwg / A03A3_013040.dwg / 17.05.2004

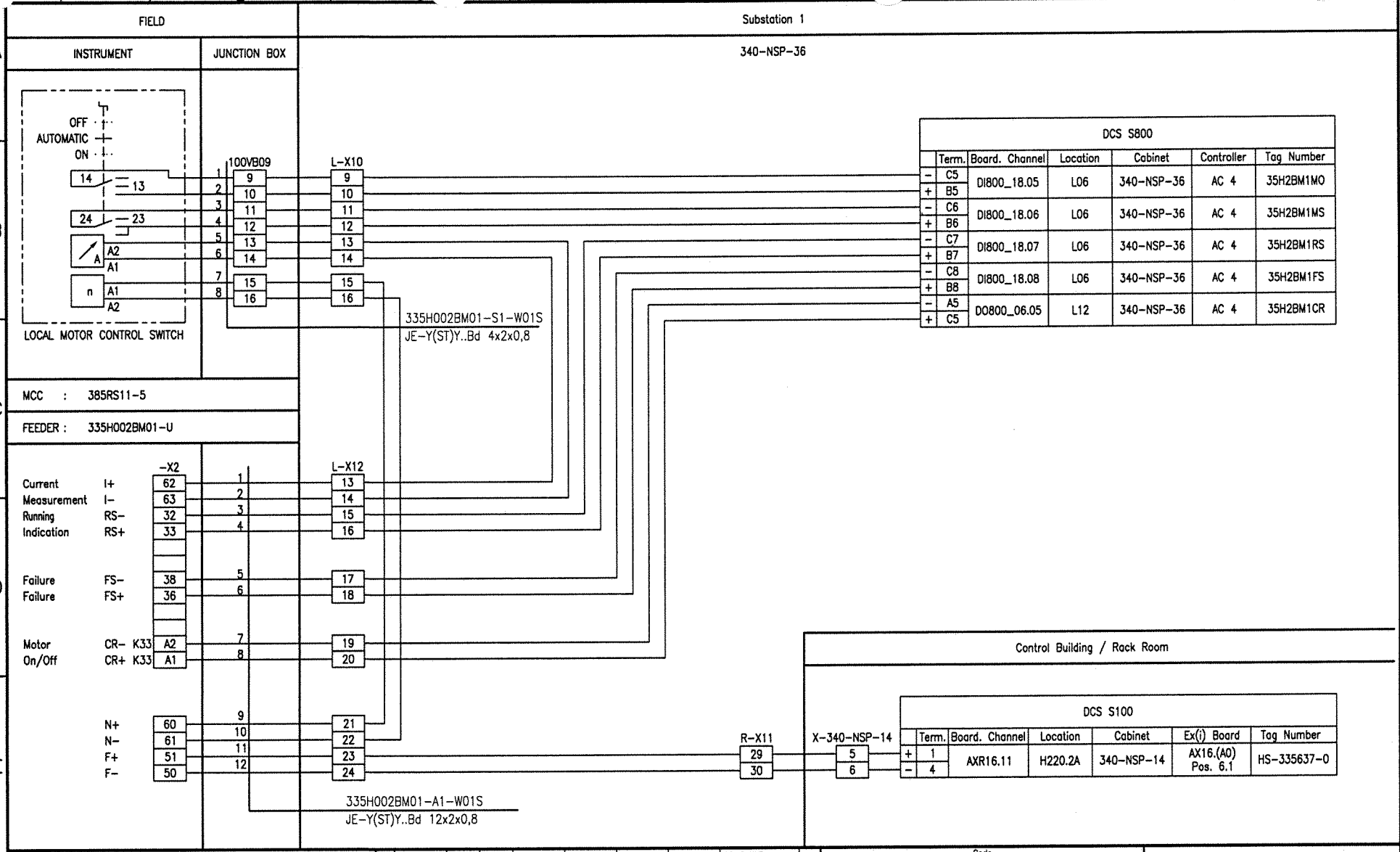

Document-ID-BAR-Code

Rev.	Date	Name	Date	Name	Date	Name	Description	Acc. Code
01	20.09.06	Hie	20.09.06	Heuer	20.09.06	Heuer	AS BUILT	
	Drawn/Prepared		Checked		Approved			

Pro. Unit	TON	Cat. Code	Acc. Code	Status
Con. Unit	Type of Document: DH	Order No.	Scale	Tot. Sheets

	Date	Name
Drawn	04.04.2005	Hielscher
Prepared	04.04.2005	Hohmann
Checked	04.04.2005	Heuer
Approved	04.04.2005	Heuer

Code: UAN 01-3040 | Document ID UD-EL-G00-FS-0001 | Part | Rev. 01 | Group

Uhde

All rights reserved © Uhde GmbH

AMMONIA / UREA PROJECT SUEZ II

Designation: Wiring diagram 335H002BM01

Store Location: Server \\p013040\013040-ADA
Store Location: Folder \EI-ET\DH_el-wiring-diag\
Store Name 01-3040_335H002BM01_000_01.dwg

ISO A3

BORDER-A3_013040.dwg / A03A3_013040.dwg / 17.05.2004

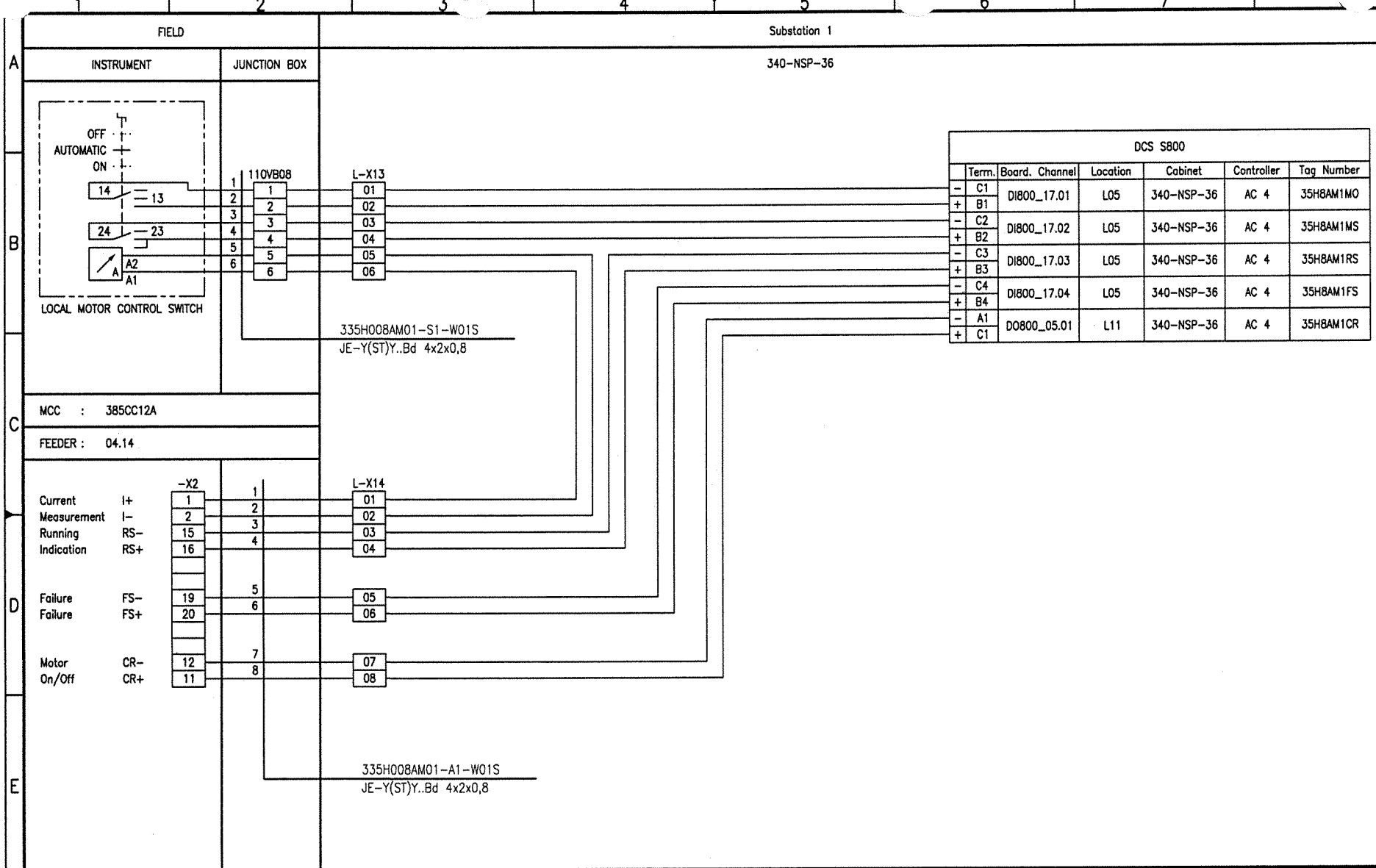

Document-ID-BAR-Code

Rev.	Date	Name	Date	Name	Date	Name	Description	Acc. Code
01	20.09.06	Hie	20.09.06	Heuer	20.09.06	Heuer	AS BUILT	
	Drawn/Prepared		Checked		Approved			

Pro. Unit	TON	Cat. Code	Acc. Code	Status

Con. Unit	Type of Document	Order No.	Scale	Tot. Sheets
	DH			

	Date	Name
Drawn	04.04.2005	Hielscher
Prepared	04.04.2005	Hohmann
Checked	04.04.2005	Heuer
Approved	04.04.2005	Heuer

Code

UAN	Document ID	Part	Rev.	Group
01-3040	UD-EL-G00-FS-0001		01	

Uhde

All rights reserved © Uhde GmbH

AMMONIA / UREA PROJECT SUEZ II

Designation
Wiring diagram
335H008AM01-M02

Store Location: Server
\\p013040\013040-ADA

Store Location: Folder
\EI-ET\DH_el-wiring-diag\

Store Name
01-3040_335H008AM01-M02_000_01.dwg

ISO A3

BORDER-A3_013040.dwg / AG03A3_013040.dwg / 17.05.2004

FIELD | Substation 1

INSTRUMENT | JUNCTION BOX | 340-NSP-36

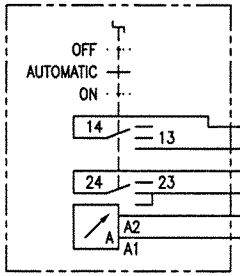

LOCAL MOTOR CONTROL SWITCH

110VB08

L-X13

335H008BM01-S1-W01S
JE-Y(ST)Y..Bd 4x2x0,8

MCC : 385CC12B

FEEDER : 27.10

-X2

L-X14

		-X2	110VB08	L-X14
Current Measurement	I+	1	1	09
	I-	2	2	10
Running Indication	RS-	15	3	11
	RS+	16	4	12
Failure	FS-	19	5	13
Failure	FS+	20	6	14
Motor On/Off	CR-	12	7	15
	CR+	11	8	16

335H008BM01-A1-W01S
JE-Y(ST)Y..Bd 4x2x0,8

DCS S800

	Term.	Board. Channel	Location	Cabinet	Controller	Tag Number
-	C1	DI800_18.01	L06	340-NSP-36	AC 4	35H8BM1MO
+	B1					
-	C2	DI800_18.02	L06	340-NSP-36	AC 4	35H8BM1MS
+	B2					
-	C3	DI800_18.03	L06	340-NSP-36	AC 4	35H8BM1RS
+	B3					
-	C4	DI800_18.04	L06	340-NSP-36	AC 4	35H8BM1FS
+	B4					
-	A1	DO800_06.01	L12	340-NSP-36	AC 4	35H8BM1CR
+	C1					

Document-ID-BAR-Code

Rev.	Date	Name (Drawn/Prepared)	Date	Name (Checked)	Date	Name (Approved)	Description	Acc. Code
01	20.09.06	Hie Hie	20.09.06	Heuer	20.09.06	Heuer	AS BUILT	

Pro. Unit	TON	Cat. Code	Acc. Code	Status

Con. Unit	Type of Document	Order No.	Scale	Tot. Sheets
	DH			

	Date	Name
Drawn	04.04.2005	Hielscher
Prepared	04.04.2005	Hohmann
Checked	04.04.2005	Heuer
Approved	04.04.2005	Heuer

Code: UAN 01-3040 | Document ID UD-EL-G00-FS-0001 | Part | Rev. 01 | Group

Uhde

All rights reserved © Uhde GmbH

AMMONIA / UREA PROJECT SUEZ II

Designation: Wiring diagram 335H008BM01-M02

Store Location: Server \\p013040\013040-ADA
Store Location: Folder \Ei-ET\DH_el-wiring-diag\
Store Name 01-3040_335H008BM01-M02_000_01.dwg

ISO A3

BORDER-A3_013040.dwg / A603A3_013040.dwg / 17.05.2004

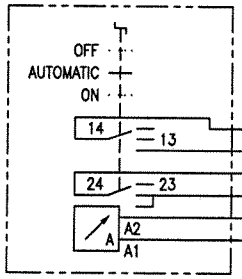

FIELD

INSTRUMENT

JUNCTION BOX

Substation 1

340-NSP-36

LOCAL MOTOR CONTROL SWITCH

110VB08

L-X13

335H008CM01-S1-W01S
JE-Y(ST)Y..Bd 4x2x0,8

MCC : 385CC12A

FEEDER : 04.18

-X2

L-X14

		-X2		L-X14
Current	I+	1	1	17
Measurement	I-	2	2	18
Running	RS-	15	3	19
Indication	RS+	16	4	20
Failure	FS-	19	5	21
Failure	FS+	20	6	22
Motor	CR-	12	7	23
On/Off	CR+	11	8	24

335H008CM01-A1-W01S
JE-Y(ST)Y..Bd 4x2x0,8

DCS S800

	Term.	Board. Channel	Location	Cabinet	Controller	Tag Number
-	C1	DI800_19.01	L07	340-NSP-36	AC 4	35H8CM1MO
+	B1					
-	C2	DI800_19.02	L07	340-NSP-36	AC 4	35H8CM1MS
+	B2					
-	C3	DI800_19.03	L07	340-NSP-36	AC 4	35H8CM1RS
+	B3					
-	C4	DI800_19.04	L07	340-NSP-36	AC 4	35H8CM1FS
+	B4					
-	A1	DO800_07.01	R08	340-NSP-36	AC 4	35H8CM1CR
+	C1					

BORDER-A3_013040.dwg / AG03A3_013040.dwg / 17.05.2004

Document-ID-BAR-Code

Rev.	Date	Name (Drawn/Prepared)	Date	Name (Checked)	Date	Name (Approved)	Description	Acc. Code
01	20.09.06	Hie Hie	20.09.06	Heuer	20.09.06	Heuer	AS BUILT	

UAN	Document ID	Part	Rev.	Group
01-3040	UD-EL-G00-FS-0001		01	

Code

Uhde

All rights reserved © Uhde GmbH

Pro. Unit	TON	Cat. Code	Acc. Code	Status

Con. Unit	Type of Document	Order No.	Scale	Tot. Sheets
	DH			

	Date	Name
Drawn	04.04.2005	Hielscher
Prepared	04.04.2005	Hohmann
Checked	04.04.2005	Heuer
Approved	04.04.2005	Heuer

AMMONIA / UREA
PROJECT
SUEZ II

Designation
Wiring diagram
335H008CM01-M02

ISO A3

Store Location: Server
\\p013040\013040-ADA

Store Location: Folder
\EI-ET\DH_ei-wiring-diag\

Store Name
01-3040_335H008CM01-M02_000_01.dwg

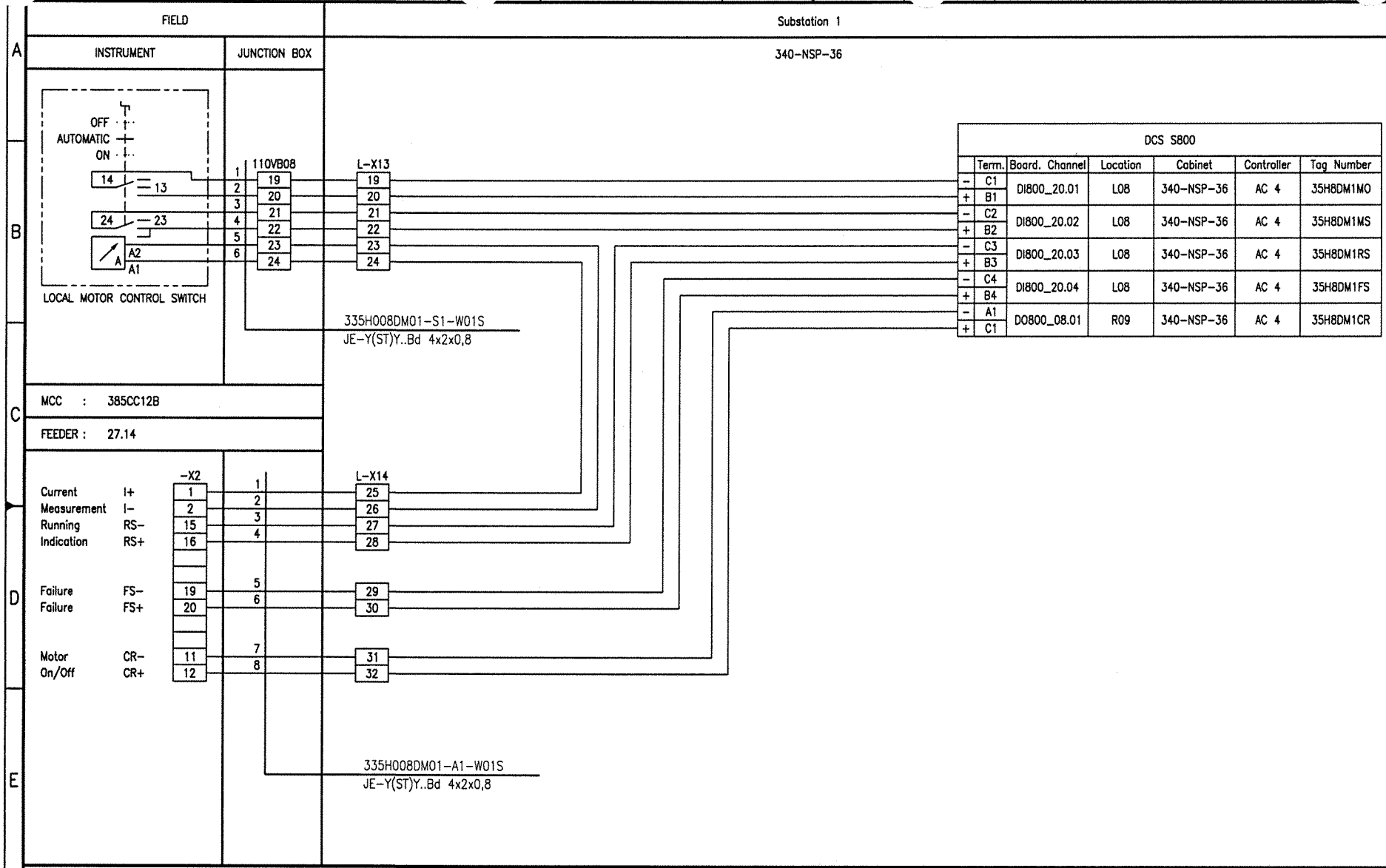

Document-ID-BAR-Code

Rev.	Date	Name (Drawn/Prepared)	Date	Name (Checked)	Date	Name (Approved)	Description	Acc. Code
01	20.09.06	Hie Hie	20.09.06	Heuer	20.09.06	Heuer	AS BUILT	

UAN	Document ID	Part	Rev.	Group
01-3040	UD-EL-G00-FS-0001		01	

Code

Uhde

All rights reserved © Uhde GmbH

Pro. Unit	TON	Cat. Code	Acc. Code	Status
Con. Unit	Type of Document: DH	Order No.	Scale	Tot. Sheets

	Date	Name
Drawn	04.04.2005	Hielscher
Prepared	04.04.2005	Hohmann
Checked	04.04.2005	Heuer
Approved	04.04.2005	Heuer

AMMONIA / UREA PROJECT SUEZ II

Designation
Wiring diagram
335H008DM01-M02

Store Location: Server \\p013040\013040-ADA
Store Location: Folder \Ei-ET\DH_el-wiring-diag\
Store Name 01-3040_335H008DM01-M02_000_01.dwg

ISO A3

BORDER-A3_013040.dwg / A013A3_013040.dwg / 17.05.2004

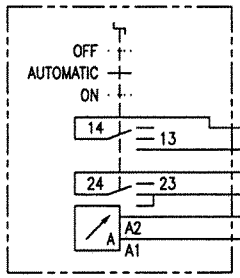

LOCAL MOTOR CONTROL SWITCH

FIELD | Substation 1

INSTRUMENT | JUNCTION BOX | 340-NSP-36

110VB01: 1, 2, 3, 4, 5, 6 — 7, 8, 9, 10, 11, 12

L-X07: 07, 08, 09, 10, 11, 12

335H011-M01-S1-W01S
JE-Y(ST)Y..Bd 4x2x0,8

MCC : 385CC12B

FEEDER : 28.06D

-X2

		-X2	110VB01	L-X15
Current Measurement	I+	1	1	01
	I-	2	2	02
Running Indication	RS-	15	3	03
	RS+	16	4	04
Failure	FS-	19	5	05
Failure	FS+	20	6	06
Motor On/Off	CR-	12	7	07
	CR+	11	8	08

335H011-M01-A1-W01S
JE-Y(ST)Y..Bd 4x2x0,8

DCS S800

	Term.	Board. Channel	Location	Cabinet	Controller	Tag Number
-	C5	DI800_19.05	L07	340-NSP-36	AC 4	35H11M1MO
+	B5					
-	C6	DI800_19.06	L07	340-NSP-36	AC 4	35H11M1MS
+	B6					
-	C7	DI800_19.07	L07	340-NSP-36	AC 4	35H11M1RS
+	B7					
-	C8	DI800_19.08	L07	340-NSP-36	AC 4	35H11M1FS
+	B8					
-	A11	DO800_05.11	L10	340-NSP-36	AC 4	35H11M1CR
+	C11					

Document-ID-BAR-Code

Rev.	Date	Name (Drawn/Prepared)	Date	Name (Checked)	Date	Name (Approved)	Description	Acc. Code
01	20.09.06	Hie Hie	20.09.06	Heuer	20.09.06	Heuer	AS BUILT	

UAN	Document ID	Part	Rev.	Group
01-3040	UD-EL-G00-FS-0001		01	

Code

Uhde

All rights reserved © Uhde GmbH

Pro. Unit	TON	Cat. Code	Acc. Code	Status
Con. Unit	Type of Document: DH	Order No.	Scale	Tot. Sheets

	Date	Name
Drawn	04.04.2005	Hielscher
Prepared	04.04.2005	Hohmann
Checked	04.04.2005	Heuer
Approved	04.04.2005	Heuer

AMMONIA / UREA PROJECT SUEZ II

Designation
Wiring diagram
335H011-M01

Store Location: Server \\p013040\013040-ADA
Store Location: Folder \EI-ET\DH_el-wiring-diag\
Store Name 01-3040_335H011-M01_000_01.dwg

ISO A3

BORDER-A3_013040.dwg / A03A3_013040.dwg / 17.05.2004

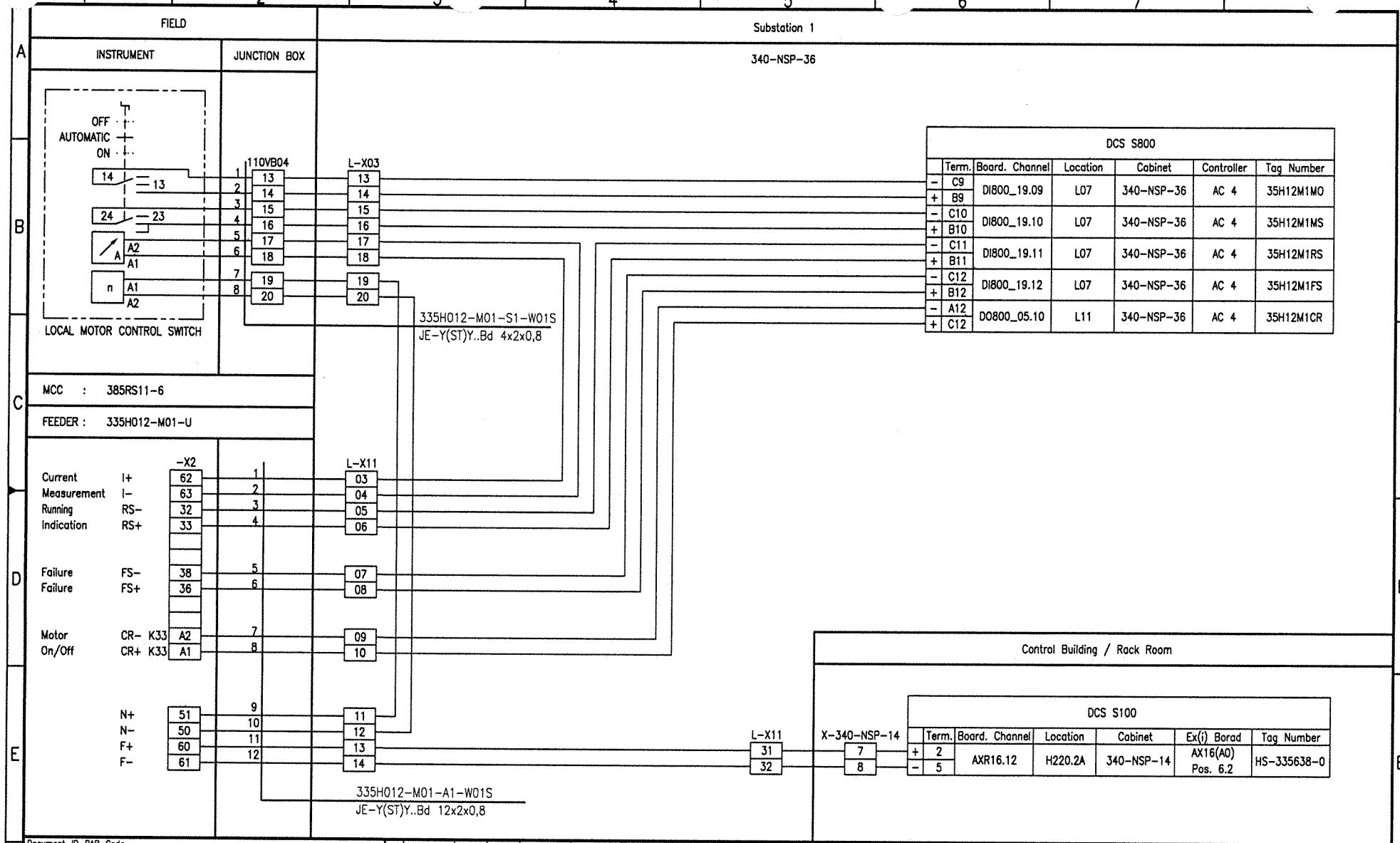

Document-ID-BAR-Code

Rev.	Date	Name	Date	Name	Date	Name	Description	Acc. Code
01	20.09.06	Hie	20.09.06	Heuer	20.09.06	Heuer	AS BUILT	
	Drawn/Prepared		Checked		Approved			

UAN 01-3040 | Code: Document ID UD-EL-G00-FS-0001 | Part | Rev. 01 | Group

Uhde

All rights reserved © Uhde GmbH

Pro. Unit | TON | Cat. Code | Acc. Code | Status

Con. Unit | Type of Document DH | Order No. | Scale | Tot. Sheets

	Date	Name
Drawn	04.04.2005	Hielscher
Prepared	04.04.2005	Hohmann
Checked	04.04.2005	Heuer
Approved	04.04.2005	Heuer

AMMONIA / UREA PROJECT SUEZ II

Designation: Wiring diagram 335H012-M01

Store Location: Server \\p013040\013040-ADA

Store Location: Folder \Ei-ET\DH_el-wiring-diag\

Store Name 01-3040_335H012-M01_000_01.dwg

FIELD		Substation 1
INSTRUMENT	JUNCTION BOX	340-NSP-36

MCC : 385CC12A

FEEDER : +06.06D

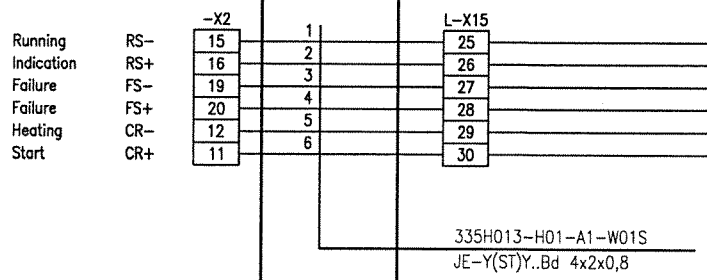

DCS S800						
	Term.	Board. Channel	Location	Cabinet	Controller	Tag Number
-	C13	DI800_20.13	L08	340-NSP-36	AC 4	35H13H1RS
+	B13					
-	C14	DI800_20.14	L08	340-NSP-36	AC 4	35H13H1FS
+	B14					
-	A13	DO800_05.13	L11	340-NSP-36	AC 4	35H13H1CR
+	C13					

Document-ID-BAR-Code

Rev.	Date	Name	Date	Name	Date	Name	Description	Acc. Code
		Drawn/Prepared		Checked		Approved		

Pro. Unit	TON	Cat. Code	Acc. Code	Status
Con. Unit	Type of Document: DH	Order No.	Scale	Tot. Sheets

	Date	Name
Drawn	20.09.2006	Hielscher
Prepared	20.09.2006	Hielscher
Checked	20.09.2006	Heuer
Approved	20.09.2006	Heuer

UAN	Code: Document ID	Part	Rev.	Group
01-3040	UD-EL-G00-FS-0001		00	

Uhde

© All rights reserved Uhde GmbH

AMMONIA / UREA PROJECT SUEZ II

Designation: Wiring diagram 335H013-H01

Store Location: Server \\p013040.do.de.uhde.org\013040-ADA

Store Location: Folder \Ei-ET\DH_ei-wiring-diag\

Store Name 01-3040_335H013-H01_000_01.dwg

ISO A3

BORDER-A3_013040.dwg / AG03A3_013040.dwg / 17.05.2004

FIELD

INSTRUMENT | JUNCTION BOX

Substation 1

340-NSP-36

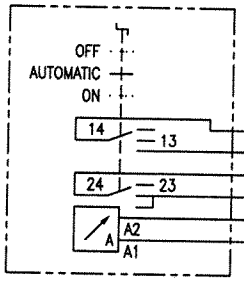

LOCAL MOTOR CONTROL SWITCH

110VB01

L-X07

335H013-M01-S1-W01S
JE-Y(ST)Y..Bd 4x2x0,8

MCC : 385CC12B

FEEDER : 28.06C

-X2

L-X15

		-X2	110VB01	L-X15
Current Measurement	I+	1	1	17
	I-	2	2	18
Running Indication	RS-	15	3	19
	RS+	16	4	20
Failure	FS-	19	5	21
Failure	FS+	20	6	22
Motor On/Off	CR-	11	7	23
	CR+	12	8	24

335H013-M01-A1-W01S
JE-Y(ST)Y..Bd 4x2x0,8

DCS S800

	Term.	Board. Channel	Location	Cabinet	Controller	Tag Number
-	C9	DI800_20.09	L08	340-NSP-36	AC 4	35H13M1MO
+	B9					
-	C10	DI800_20.10	L08	340-NSP-36	AC 4	35H13M1MS
+	B10					
-	C11	DI800_20.11	L08	340-NSP-36	AC 4	35H13M1RS
+	B11					
-	C12	DI800_20.12	L08	340-NSP-36	AC 4	35H13M1FS
+	B12					
-	A14	DO800_05.14	L11	340-NSP-36	AC 4	35H13M1CR
+	C14					

Document-ID-BAR-Code

Rev.	Date	Name	Date	Name	Date	Name	Description	Acc. Code
01	20.09.06	Hie	20.09.06	Heuer	20.09.06	Heuer	AS BUILT	
	Drawn/Prepared		Checked		Approved			

UAN	Document ID	Part	Rev.	Group
01-3040	UD-EL-G00-FS-0001		01	

Code

Uhde

All rights reserved © Uhde GmbH

Pro. Unit	TON	Cat. Code	Acc. Code	Status

Con. Unit	Type of Document	Order No.	Scale	Tot. Sheets
	DH			

	Date	Name
Drawn	04.04.2005	Hielscher
Prepared	04.04.2005	Hohmann
Checked	04.04.2005	Heuer
Approved	04.04.2005	Heuer

AMMONIA / UREA
PROJECT
SUEZ II

Designation
Wiring diagram
335H013-M01

Store Location: Server
\\p013040\013040-ADA

Store Location: Folder
\Ei-ET\DH_el-wiring-diag\

Store Name
01-3040_335H013-M01_000_01.dwg

ISO A3

BORDER-A3_013040.dwg / A03A3_013040.dwg / 17.05.2004

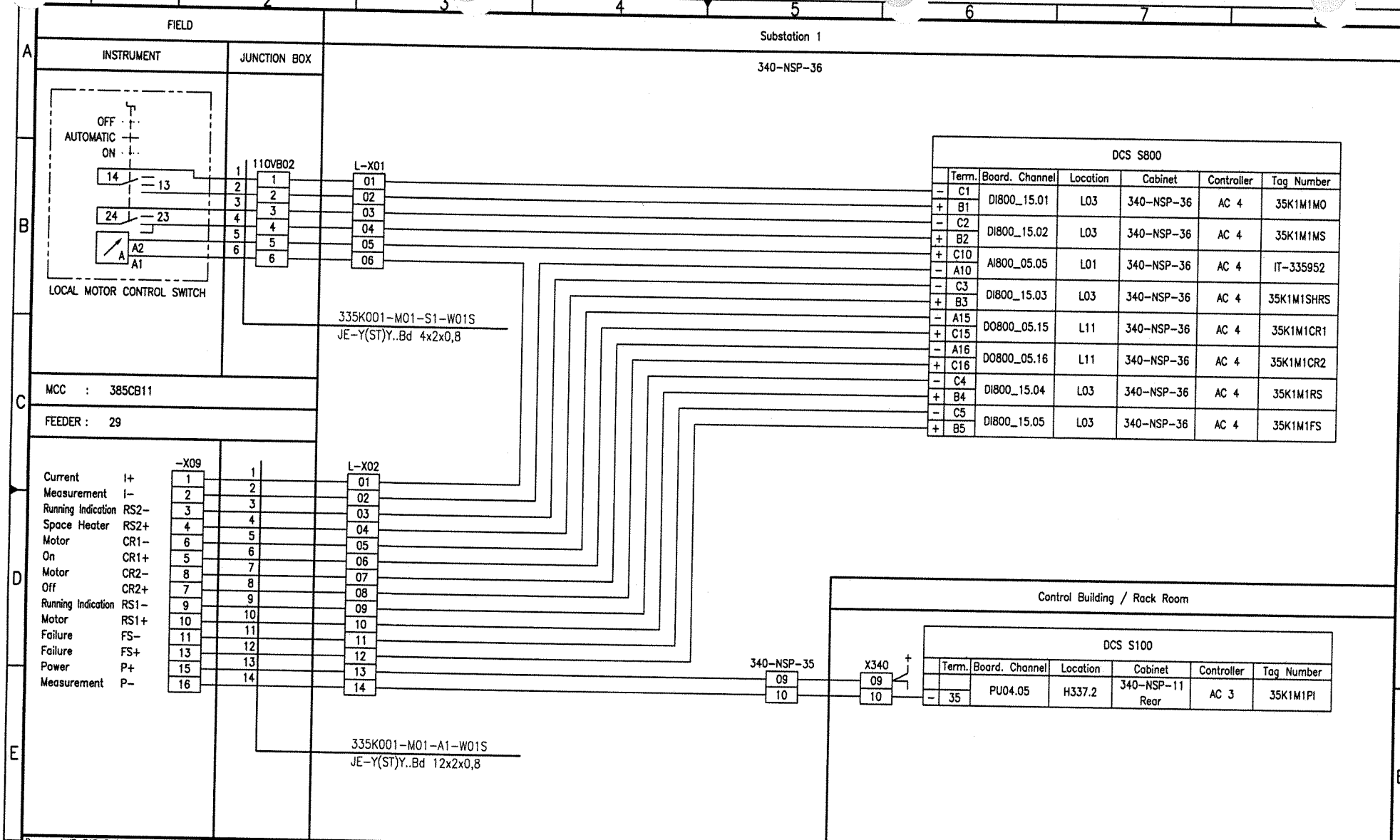
FIELD
INSTRUMENT
JUNCTION BOX
Substation 1
340-NSP-36
OFF
AUTOMATIC
ON
14
13
24
23
A2
A1
LOCAL MOTOR CONTROL SWITCH
110VB02
L-X01
335K001-M01-S1-W01S
JE-Y(ST)Y..Bd 4x2x0,8
MCC : 385CB11
FEEDER : 29
-X09
Current I+
Measurement I-
Running Indication RS2-
Space Heater RS2+
Motor CR1-
On CR1+
Motor CR2-
Off CR2+
Running Indication RS1-
Motor RS1+
Failure FS-
Failure FS+
Power P+
Measurement P-
L-X02
335K001-M01-A1-W01S
JE-Y(ST)Y..Bd 12x2x0,8
DCS S800
Term. Board. Channel Location Cabinet Controller Tag Number
C1 DI800_15.01 L03 340-NSP-36 AC 4 35K1M1MO
B1
C2 DI800_15.02 L03 340-NSP-36 AC 4 35K1M1MS
B2
C10 AI800_05.05 L01 340-NSP-36 AC 4 IT-335952
A10
C3 DI800_15.03 L03 340-NSP-36 AC 4 35K1M1SHRS
B3
A15 DO800_05.15 L11 340-NSP-36 AC 4 35K1M1CR1
C15
A16 DO800_05.16 L11 340-NSP-36 AC 4 35K1M1CR2
C16
C4 DI800_15.04 L03 340-NSP-36 AC 4 35K1M1RS
B4
C5 DI800_15.05 L03 340-NSP-36 AC 4 35K1M1FS
B5
340-NSP-35
X340
Control Building / Rack Room
DCS S100
Term. Board. Channel Location Cabinet Controller Tag Number
35 PU04.05 H337.2 340-NSP-11 Rear AC 3 35K1M1PI
Document-ID-BAR-Code
01 20.09.06 Hie Hie 20.09.06 Heuer 20.09.06 Heuer AS BUILT
Rev. Date Name Date Name Date Name Description Acc. Code
Drawn/Prepared Checked Approved
UAN 01-3040
Code Document ID UD-EL-G00-FS-0001 Part Rev. 01 Group
Uhde
All rights reserved © Uhde GmbH
Pro. Unit TON Cat. Code Acc. Code Status
Con. Unit Type of Document DH Order No. Scale Tot. Sheets
Drawn 04.04.2005 Hielscher
Prepared 04.04.2005 Hohmann
Checked 04.04.2005 Heuer
Approved 04.04.2005 Heuer
AMMONIA / UREA PROJECT SUEZ II
Designation Wiring diagram 335K001-M01
Store Location: Server \\p013040\013040-ADA
Store Location: Folder \EI-ET\DH_el-wiring-diag\
Store Name 01-3040_335K001-M01_000_01.dwg
ISO A3
BORDER-A3_013040.dwg / A003A3_013040.dwg / 17.05.2004

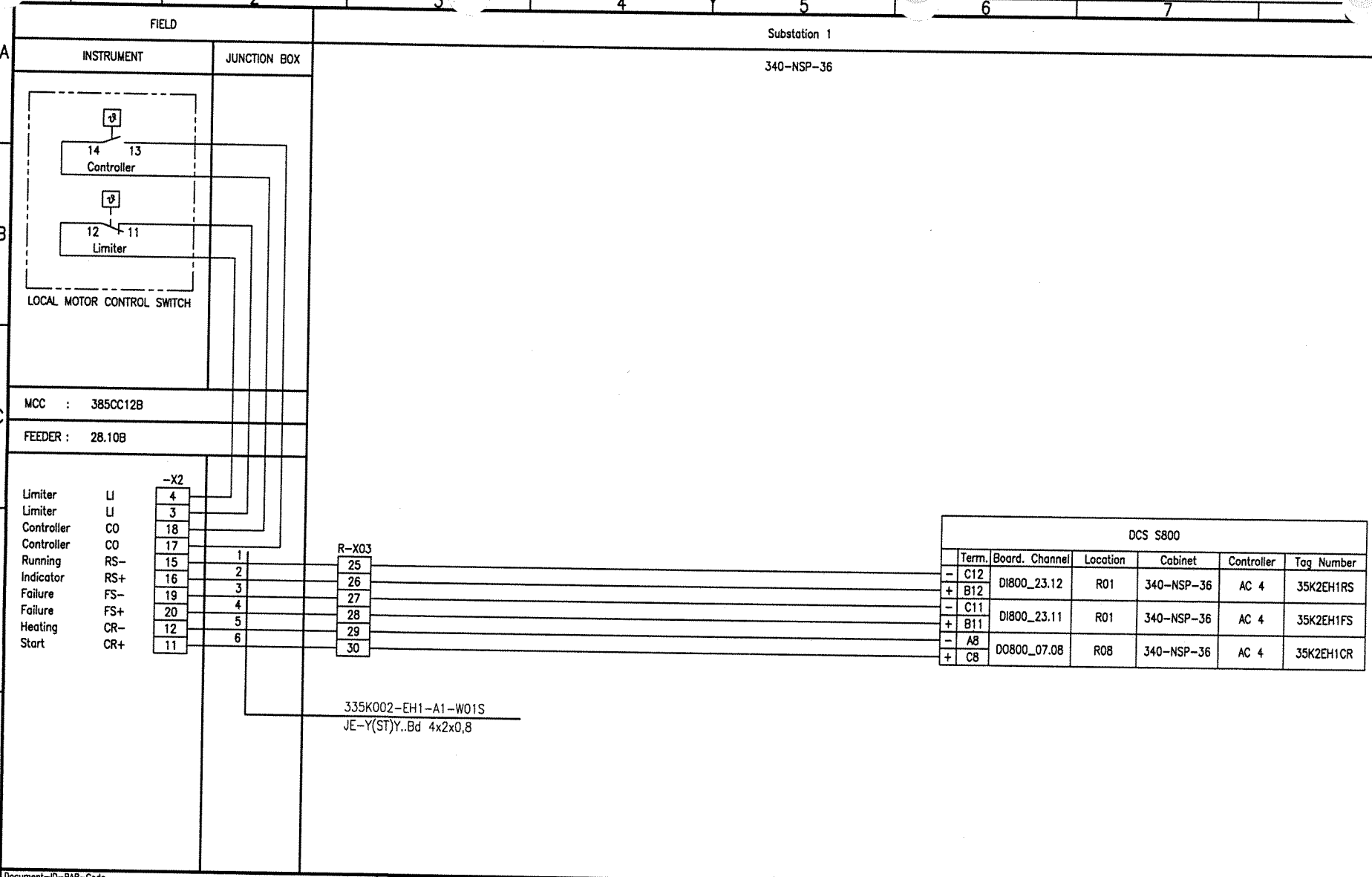

Document-ID-BAR-Code

Rev.	Date	Name (Drawn/Prepared)	Date	Name (Checked)	Date	Name (Approved)	Description	Acc. Code
01	20.09.06	Hie Hie	20.09.06	Heuer	20.09.06	Heuer	AS BUILT	

UAN	Code: Document ID	Part	Rev.	Group
01-3040	UD-EL-G00-FS-0001		01	

Uhde

All rights reserved © Uhde GmbH

Pro. Unit	TON	Cat. Code	Acc. Code	Status
Con. Unit	Type of Document: DH	Order No.	Scale	Tot. Sheets

	Date	Name
Drawn	04.04.2005	Hielscher
Prepared	04.04.2005	Hohmann
Checked	04.04.2005	Heuer
Approved	04.04.2005	Heuer

AMMONIA / UREA PROJECT SUEZ II

Designation: Wiring diagram 335K002-EH1

Store Location: Server \\p013040\013040-ADA

Store Location: Folder \Ei-ET\DH_el-wiring-diag\

Store Name: 01-3040_335K002-EH1_000_01.dwg

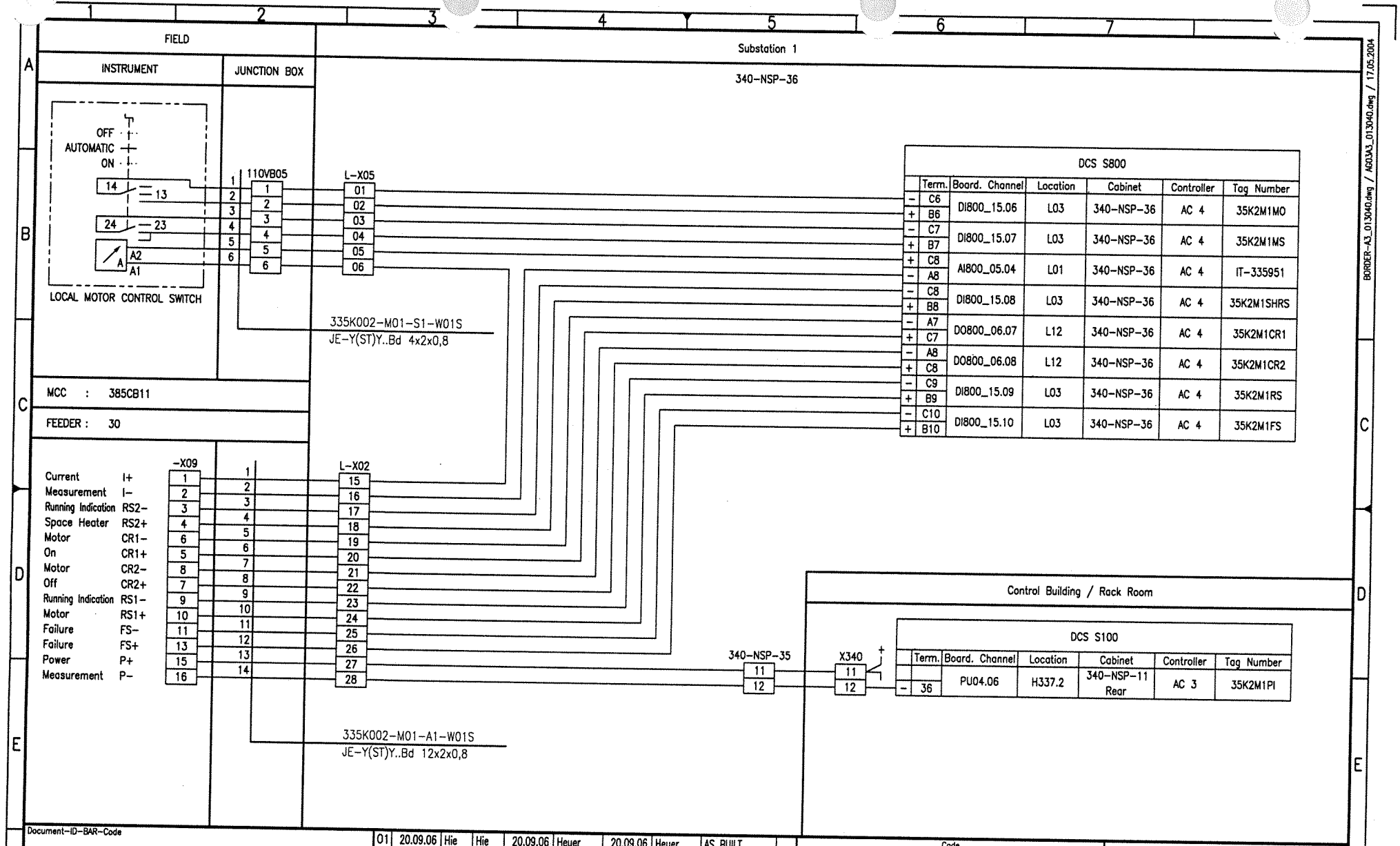
FIELD
INSTRUMENT
JUNCTION BOX
Substation 1
340-NSP-36
OFF
AUTOMATIC
ON
14
13
24
23
A2
A1
LOCAL MOTOR CONTROL SWITCH
110VB05
L-X05
01
02
03
04
05
06
335K002-M01-S1-W01S
JE-Y(ST)Y..Bd 4x2x0,8
MCC : 385CB11
FEEDER : 30
-X09
Current I+
Measurement I-
Running Indication RS2-
Space Heater RS2+
Motor CR1-
On CR1+
Motor CR2-
Off CR2+
Running Indication RS1-
Motor RS1+
Failure FS-
Failure FS+
Power P+
Measurement P-
L-X02
15
16
17
18
19
20
21
22
23
24
25
26
27
28
335K002-M01-A1-W01S
JE-Y(ST)Y..Bd 12x2x0,8
340-NSP-35
11
12
X340
Control Building / Rack Room
DCS S800
Term. Board. Channel Location Cabinet Controller Tag Number
C6 B6 DI800_15.06 L03 340-NSP-36 AC 4 35K2M1MO
C7 B7 DI800_15.07 L03 340-NSP-36 AC 4 35K2M1MS
C8 A8 AI800_05.04 L01 340-NSP-36 AC 4 IT-335951
C8 B8 DI800_15.08 L03 340-NSP-36 AC 4 35K2M1SHRS
A7 C7 DO800_06.07 L12 340-NSP-36 AC 4 35K2M1CR1
A8 C8 DO800_06.08 L12 340-NSP-36 AC 4 35K2M1CR2
C9 B9 DI800_15.09 L03 340-NSP-36 AC 4 35K2M1RS
C10 B10 DI800_15.10 L03 340-NSP-36 AC 4 35K2M1FS
DCS S100
Term. Board. Channel Location Cabinet Controller Tag Number
36 PU04.06 H337.2 340-NSP-11 Rear AC 3 35K2M1PI
Document-ID-BAR-Code
01 20.09.06 Hie Hie 20.09.06 Heuer 20.09.06 Heuer AS BUILT
Rev. Date Name Drawn/Prepared Date Name Checked Date Name Approved Description Acc. Code
UAN 01-3040
Code Document ID UD-EL-G00-FS-0001 Part Rev. 01 Group
Uhde
All rights reserved © Uhde GmbH
Pro. Unit TON Cat. Code Acc. Code Status
Con. Unit Type of Document DH Order No. Scale Tot. Sheets
Drawn 04.04.2005 Hielscher
Prepared 04.04.2005 Hohmann
Checked 04.04.2005 Heuer
Approved 04.04.2005 Heuer
AMMONIA / UREA PROJECT SUEZ II
Designation
Wiring diagram 335K002-M01
Store Location: Server \\p013040\013040-ADA
Store Location: Folder \Ei-ET\DH_el-wiring-diag\
Store Name 01-3040_335K002-M01_000_01.dwg
ISO A3
BORDER-A3_013040.dwg / A003A3_013040.dwg / 17.05.2004

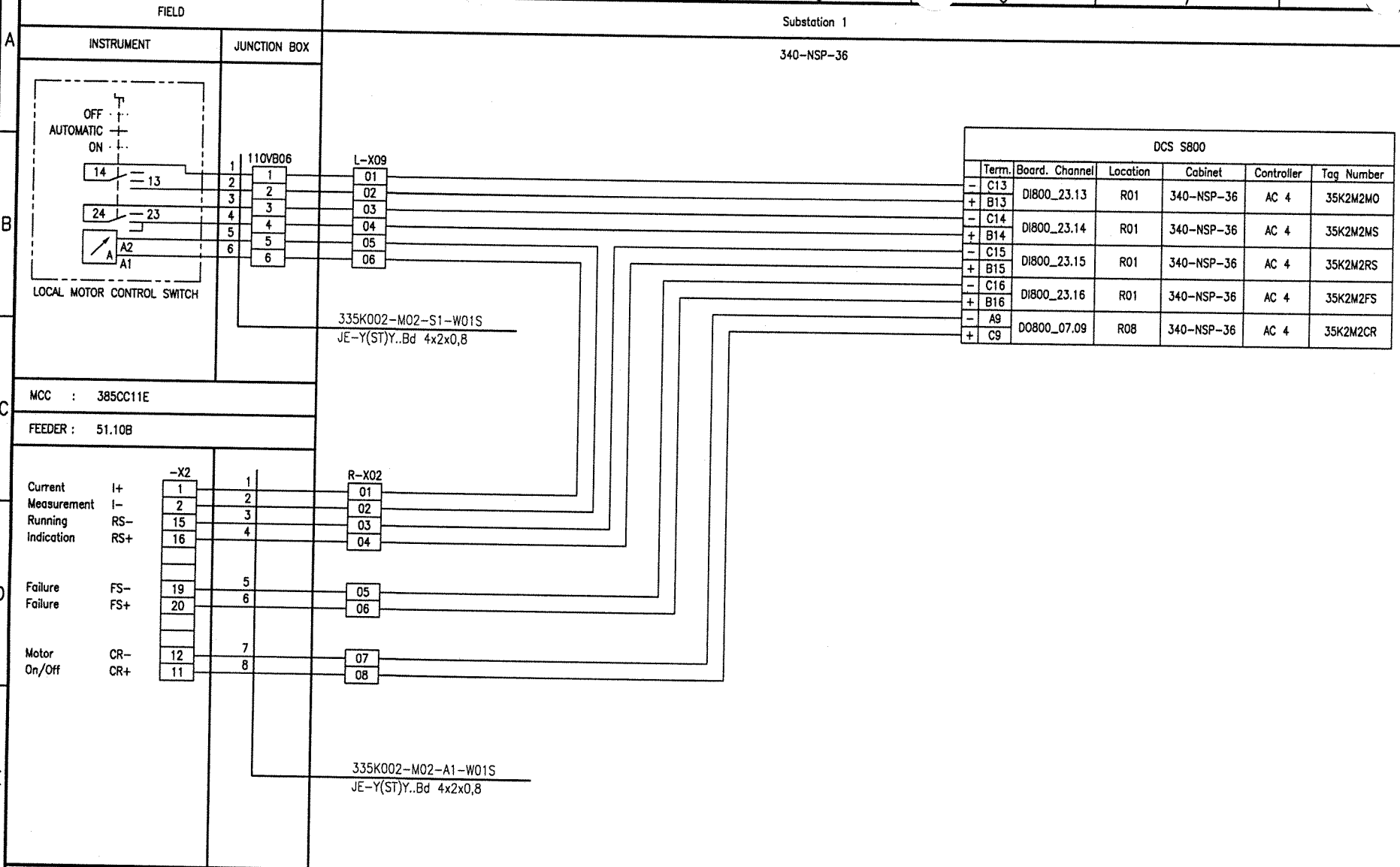

Document-ID-BAR-Code

Rev.	Date	Name (Drawn/Prepared)	Date	Name (Checked)	Date	Name (Approved)	Description	Acc. Code
01	20.09.06	Hie Hie	20.09.06	Heuer	20.09.06	Heuer	AS BUILT	

UAN	Document ID	Part	Rev.	Group
01-3040	UD-EL-G00-FS-0001		01	

Code

Uhde

All rights reserved © Uhde GmbH

Pro. Unit	TON	Cat. Code	Acc. Code	Status
Con. Unit	Type of Document: DH	Order No.	Scale	Tot. Sheets

	Date	Name
Drawn	04.04.2005	Hielscher
Prepared	04.04.2005	Hohmann
Checked	04.04.2005	Heuer
Approved	04.04.2005	Heuer

AMMONIA / UREA PROJECT SUEZ II

Designation
Wiring diagram
335K002-M02

Store Location: Server \\p013040\013040-ADA
Store Location: Folder \Ei-ET\DH_el-wiring-diag\
Store Name 01-3040_335K002-M02_000_01.dwg

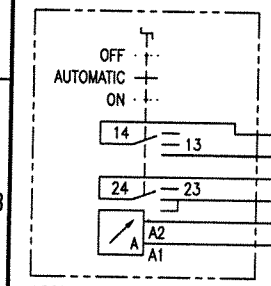

LOCAL MOTOR CONTROL SWITCH

FIELD

INSTRUMENT | JUNCTION BOX

Substation 1

340-NSP-36

110VB06

L-X09

335K002-M03-S1-W01S
JE-Y(ST)Y..Bd 4x2x0,8

MCC : 385CC11E

FEEDER : 55.06B

-X2

R-X02

		-X2		R-X02
Current Measurement	I+	1	1	09
	I-	2	2	10
Running Indication	RS-	15	3	11
	RS+	16	4	12
Failure	FS-	19	5	13
Failure	FS+	20	6	14
Motor On/Off	CR-	12	7	15
	CR+	11	8	16

335K002-M03-A1-W01S
JE-Y(ST)Y..Bd 4x2x0,8

DCS S800

	Term.	Board. Channel	Location	Cabinet	Controller	Tag Number
-	C13	DI800_24.13	R02	340-NSP-36	AC 4	35K2M3MO
+	B13					
-	C14	DI800_24.14	R02	340-NSP-36	AC 4	35K2M3MS
+	B14					
-	C15	DI800_24.15	R02	340-NSP-36	AC 4	35K2M3RS
+	B15					
-	C16	DI800_24.16	R02	340-NSP-36	AC 4	35K2M3FS
+	B16					
-	A3	DO800_08.03	R09	340-NSP-36	AC 4	35K2M3CR
+	C3					

Document-ID-BAR-Code

Rev.	Date	Name (Drawn/Prepared)	Date	Name (Checked)	Date	Name (Approved)	Description	Acc. Code
01	20.09.06	Hie Hie	20.09.06	Heuer	20.09.06	Heuer	AS BUILT	

UAN	Code: Document ID	Part	Rev.	Group
01-3040	UD-EL-G00-FS-0001		01	

Uhde

All rights reserved © Uhde GmbH

Pro. Unit	TON	Cat. Code	Acc. Code	Status
Con. Unit	Type of Document: DH	Order No.	Scale	Tot. Sheets

	Date	Name
Drawn	04.04.2005	Hielscher
Prepared	04.04.2005	Hohmann
Checked	04.04.2005	Heuer
Approved	04.04.2005	Heuer

AMMONIA / UREA PROJECT SUEZ II

Designation: Wiring diagram 335K002-M03

Store Location: Server \\p013040\013040-ADA

Store Location: Folder \Ei-ET\DH_el-wiring-diag\

Store Name: 01-3040_335K002-M03_000_01.dwg

BORDER-A3_013040.dwg / A003A3_013040.dwg / 17.05.2004

ISO A3

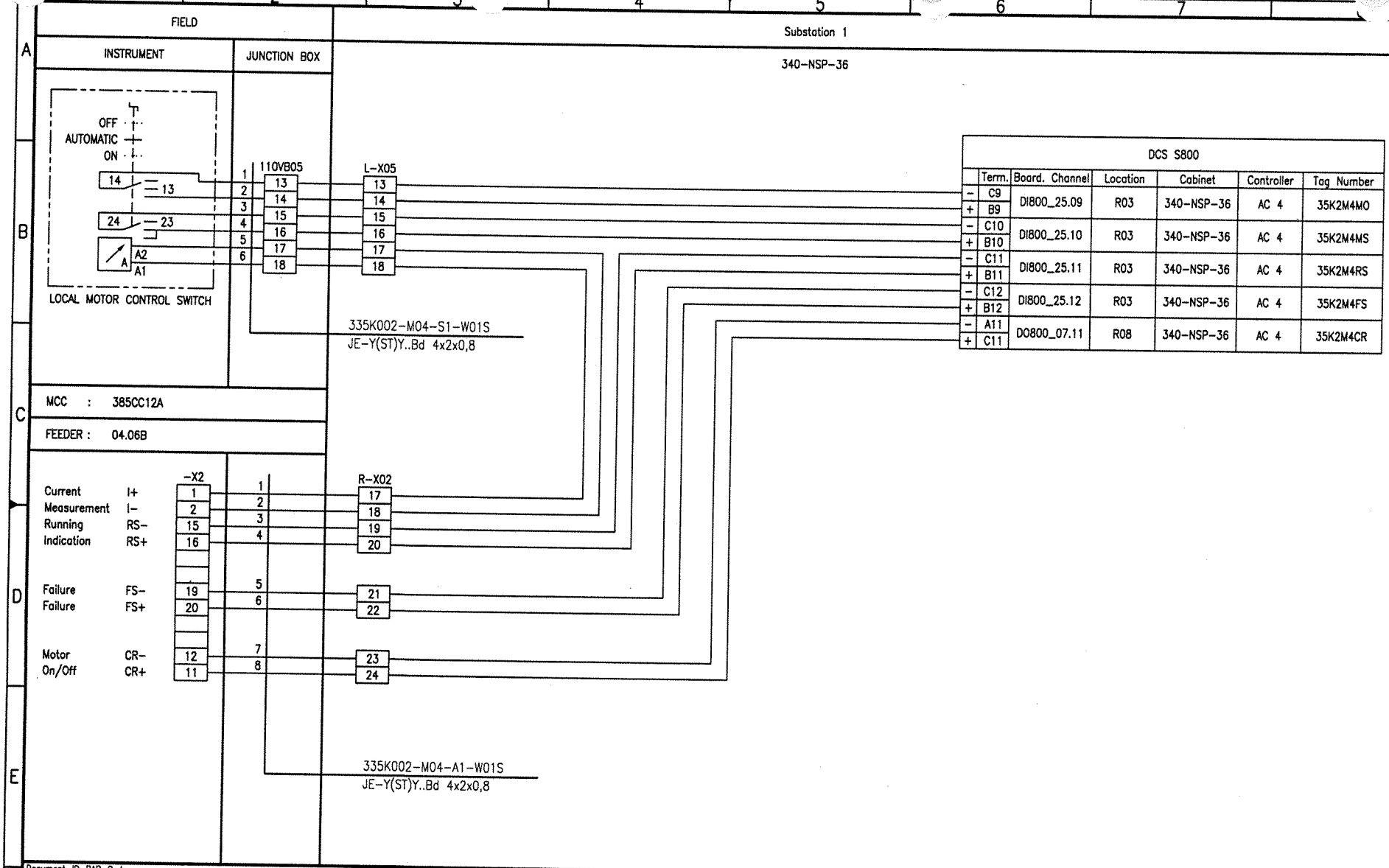

Document-ID-BAR-Code

Rev.	Date	Name (Drawn/Prepared)	Date	Name (Checked)	Date	Name (Approved)	Description	Acc. Code
01	20.09.06	Hie Hie	20.09.06	Heuer	20.09.06	Heuer	AS BUILT	

UAN	Document ID	Part	Rev.	Group
01-3040	UD-EL-G00-FS-0001		01	

Code

Uhde

All rights reserved © Uhde GmbH

Pro. Unit	TON	Cat. Code	Acc. Code	Status
Con. Unit	Type of Document: DH	Order No.	Scale	Tot. Sheets

	Date	Name
Drawn	04.04.2005	Hielscher
Prepared	04.04.2005	Hohmann
Checked	04.04.2005	Heuer
Approved	04.04.2005	Heuer

AMMONIA / UREA PROJECT SUEZ II

Designation
Wiring diagram
335K002-M04

Store Location: Server \\p013040\013040-ADA
Store Location: Folder \EI-ET\DH_el-wiring-diag\
Store Name 01-3040_335K002-M04_000_01.dwg

ISO A3

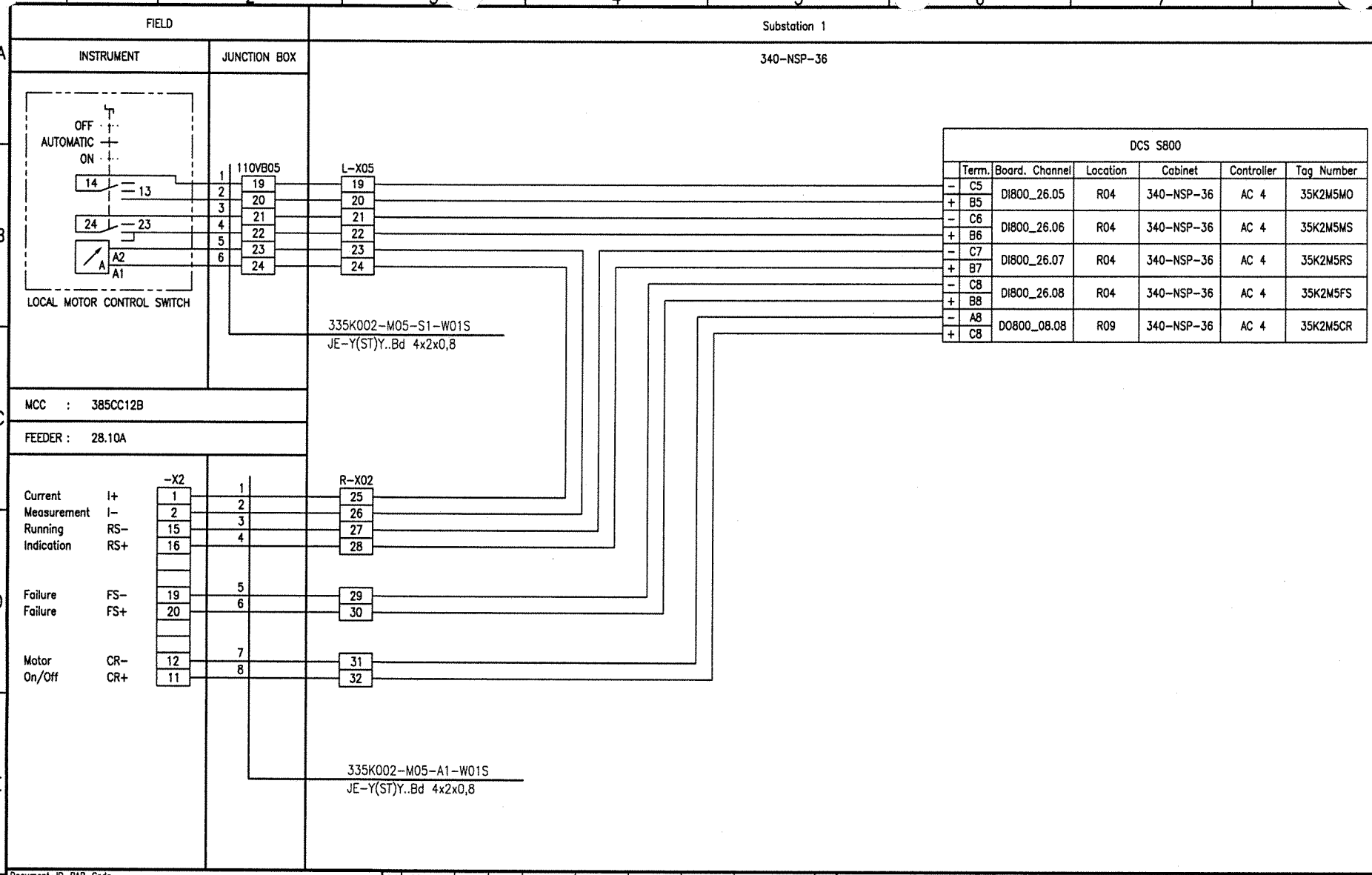

Document-ID-BAR-Code

Rev.	Date	Name (Drawn/Prepared)	Date	Name (Checked)	Date	Name (Approved)	Description	Acc. Code
01	20.09.06	Hie Hie	20.09.06	Heuer	20.09.06	Heuer	AS BUILT	

UAN 01-3040 | Code: Document ID UD-EL-G00-FS-0001 | Part | Rev. 01 | Group

Uhde

All rights reserved © Uhde GmbH

Pro. Unit	TON	Cat. Code	Acc. Code	Status
Con. Unit	Type of Document: DH	Order No.	Scale	Tot. Sheets

	Date	Name
Drawn	04.04.2005	Hielscher
Prepared	04.04.2005	Hohmann
Checked	04.04.2005	Heuer
Approved	04.04.2005	Heuer

AMMONIA / UREA PROJECT SUEZ II

Designation: Wiring diagram 335K002-M05

Store Location: Server \\p013040\013040-ADA
Store Location: Folder \EI-ET\DH_el-wiring-diag\
Store Name 01-3040_335K002-M05_000_01.dwg

ISO A3

BORDER-A3_013040.dwg / A003A3_013040.dwg / 17.05.2004

FIELD

INSTRUMENT | JUNCTION BOX

Substation 1

340-NSP-36

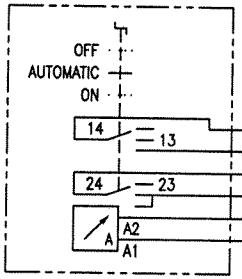

LOCAL MOTOR CONTROL SWITCH

110VB01

L-X07

335K002-M06-S1-W01S
JE-Y(ST)Y..Bd 4x2x0,8

MCC : 385CC12B

FEEDER : 04.06D

-X2

R-X14

		-X2		R-X14
Current Measurement	I+	1	1	01
	I-	2	2	02
Running Indication	RS-	15	3	03
	RS+	16	4	04
Failure	FS-	19	5	05
Failure	FS+	20	6	06
Motor On/Off	CR-	12	7	07
	CR+	11	8	08

335K002-M06-A1-W01S
JE-Y(ST)Y..Bd 4x2x0,8

DCS S800

	Term.	Board. Channel	Location	Cabinet	Controller	Tag Number
-	C1	DI800_28.01	R06	340-NSP-36	AC 4	35K2M6MO
+	B1					
-	C2	DI800_28.02	R06	340-NSP-36	AC 4	35K2M6MS
+	B2					
-	C3	DI800_28.03	R06	340-NSP-36	AC 4	35K2M6RS
+	B3					
-	C4	DI800_28.04	R06	340-NSP-36	AC 4	35K2M6FS
+	B4					
-	A9	DO800_08.09	R09	340-NSP-36	AC 4	35K2M6CR
+	C9					

Document-ID-BAR-Code

Rev.	Date	Name (Drawn/Prepared)	Date	Name (Checked)	Date	Name (Approved)	Description	Acc. Code
01	20.09.06	Hie Hie	20.09.06	Heuer	20.09.06	Heuer	AS BUILT	

UAN	Code: Document ID	Part	Rev.	Group
01-3040	UD-EL-G00-FS-0001		01	

Uhde

All rights reserved © Uhde GmbH

Pro. Unit	TON	Cat. Code	Acc. Code	Status

Con. Unit	Type of Document	Order No.	Scale	Tot. Sheets
	DH			

	Date	Name
Drawn	04.04.2005	Hielscher
Prepared	04.04.2005	Hohmann
Checked	04.04.2005	Heuer
Approved	04.04.2005	Heuer

AMMONIA / UREA PROJECT SUEZ II

Designation
Wiring diagram
335K002-M06

Store Location: Server
\\p013040\013040-ADA

Store Location: Folder
\Ei-ET\DH_el-wiring-diag\

Store Name
01-3040_335K002-M06_000_01.dwg

ISO A3

BORDER-A3_013040.dwg / A003A3_013040.dwg / 17.05.2004

FIELD | Substation 1

INSTRUMENT | JUNCTION BOX | 340-NSP-36

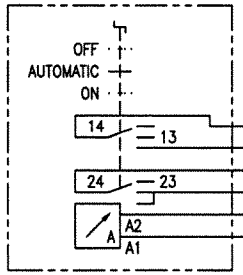

LOCAL MOTOR CONTROL SWITCH

110VB02: 1, 2, 3, 4, 5, 6 → 7, 8, 9, 10, 11, 12

L-X01: 07, 08, 09, 10, 11, 12

335K003-M01-S1-W01S
JE-Y(ST)Y..Bd 4x2x0,8

MCC : 385CB11

FEEDER : 31

		-X09	110VB02	L-X04
Current	I+	1	1	01
Measurement	I-	2	2	02
Running Indication	RS2-	3	3	03
Space Heater	RS2+	4	4	04
Motor	CR1-	6	5	05
On	CR1+	5	6	06
Motor	CR2-	8	7	07
Off	CR2+	7	8	08
Running Indication	RS1-	9	9	09
Motor	RS1+	10	10	10
Failure	FS-	11	11	11
Failure	FS+	13	12	12
Power	P+	15	13	13
Measurement	P-	16	14	14

335K003-M01-A1-W01S
JE-Y(ST)Y..Bd 12x2x0,8

DCS S800

	Term.	Board. Channel	Location	Cabinet	Controller	Tag Number
-	C11	DI800_15.11	L03	340-NSP-36	AC 4	35K3M1MO
+	B11					
-	C12	DI800_15.12	L03	340-NSP-36	AC 4	35K3M1MS
+	B12					
+	C12	AI800_05.06	L01	340-NSP-36	AC 4	IT-335953
-	A12					
-	C13	DI800_15.13	L03	340-NSP-36	AC 4	35K3M1SHRS
+	B13					
-	A9	DO800_06.09	L12	340-NSP-36	AC 4	35K3M1CR1
+	C9					
-	A10	DO800_06.10	L12	340-NSP-36	AC 4	35K3M1CR2
+	C10					
-	C14	DI800_15.14	L03	340-NSP-36	AC 4	35K3M1RS
+	B14					
-	C15	DI800_15.15	L03	340-NSP-36	AC 4	35K3M1FS
+	B15					

340-NSP-35 L-X15: 13, 14 → X340: 13, 14

Control Building / Rack Room

DCS S100

	Term.	Board. Channel	Location	Cabinet	Controller	Tag Number
-	39	PU04.07	H337.2	340-NSP-11 Rear	AC 3	35K3M1PI

Document-ID-BAR-Code

Rev.	Date	Name	Date	Name	Date	Name	Description	Acc. Code
01	20.09.06	Hie	20.09.06	Heuer	20.09.06	Heuer	AS BUILT	
	Drawn/Prepared		Checked		Approved			

Pro. Unit	TON	Cat. Code	Acc. Code	Status

Con. Unit	Type of Document	Order No.	Scale	Tot. Sheets
	DH			

	Date	Name
Drawn	04.04.2005	Hielscher
Prepared	04.04.2005	Hohmann
Checked	04.04.2005	Heuer
Approved	04.04.2005	Heuer

Store Location: Server \\p013040\013040-ADA
Store Location: Folder \EI-ET\DH_el-wiring-diag\
Store Name 01-3040_335K003-M01_000_01.dwg

UAN 01-3040 | Code: Document ID UD-EL-G00-FS-0001 | Part | Rev. 01 | Group

Uhde

All rights reserved © Uhde GmbH

AMMONIA / UREA PROJECT SUEZ II

Designation
Wiring diagram
335K003-M01

ISO A3

BORDER-A3_013040.dwg / AG03A3_013040.dwg / 17.05.2004

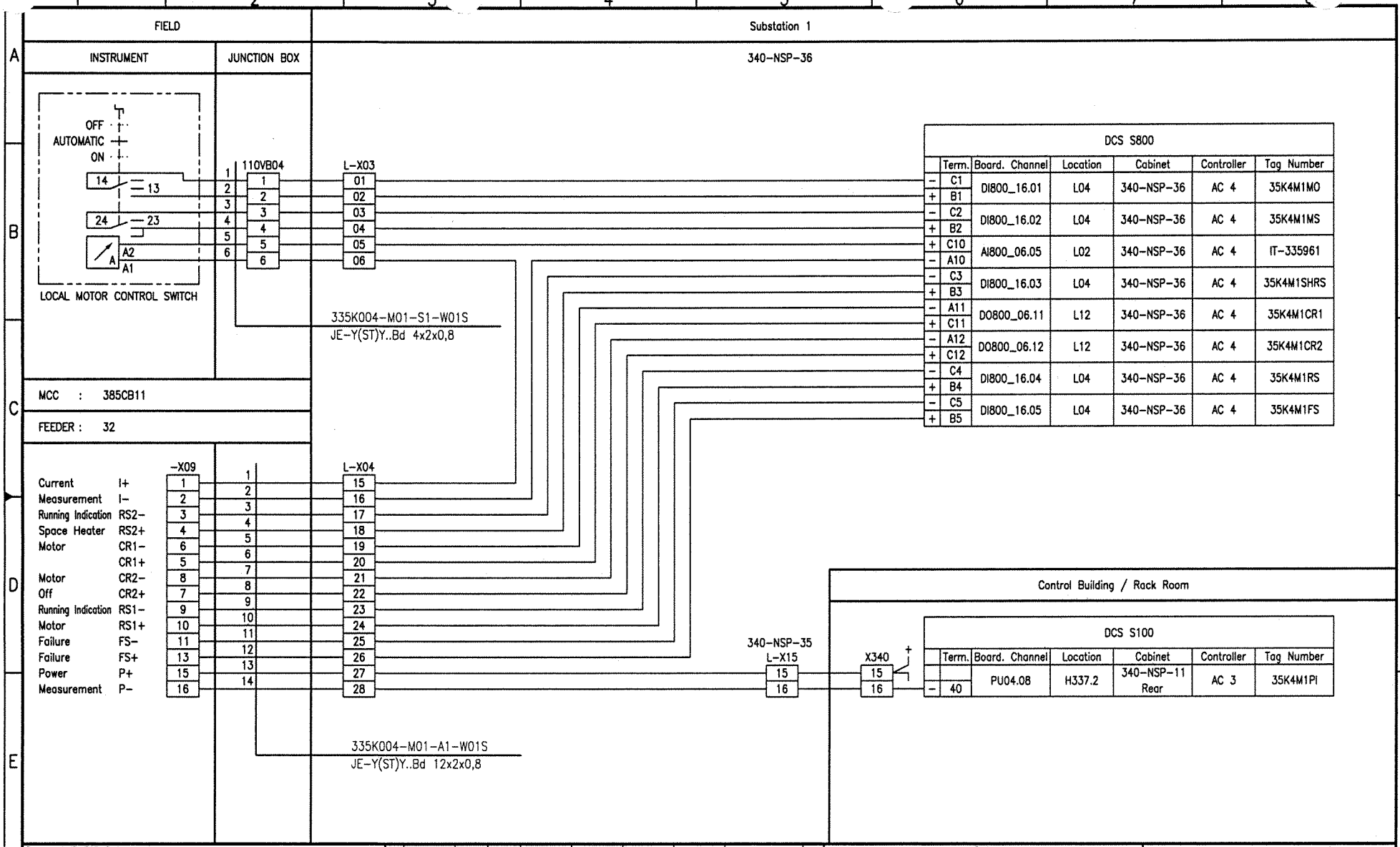

Document-ID-BAR-Code

Rev.	Date	Name	Date	Name	Date	Name	Description	Acc. Code
01	20.09.06	Hie	20.09.06	Heuer	20.09.06	Heuer	AS BUILT	
	Drawn/Prepared		Checked		Approved			

Pro. Unit	TON	Cat. Code	Acc. Code	Status
Con. Unit	Type of Document: DH	Order No.	Scale	Tot. Sheets

	Date	Name
Drawn	04.04.2005	Hielscher
Prepared	04.04.2005	Hohmann
Checked	04.04.2005	Heuer
Approved	04.04.2005	Heuer

Store Location: Server \\p013040\013040-ADA
Store Location: Folder \Ei-ET\DH_el-wiring-diag\
Store Name 01-3040_335K004-M01_000_01.dwg

Code: UAN 01-3040 | Document ID UD-EL-G00-FS-0001 | Part | Rev. 01 | Group

Uhde

All rights reserved © Uhde GmbH

AMMONIA / UREA PROJECT SUEZ II

Designation: Wiring diagram 335K004-M01

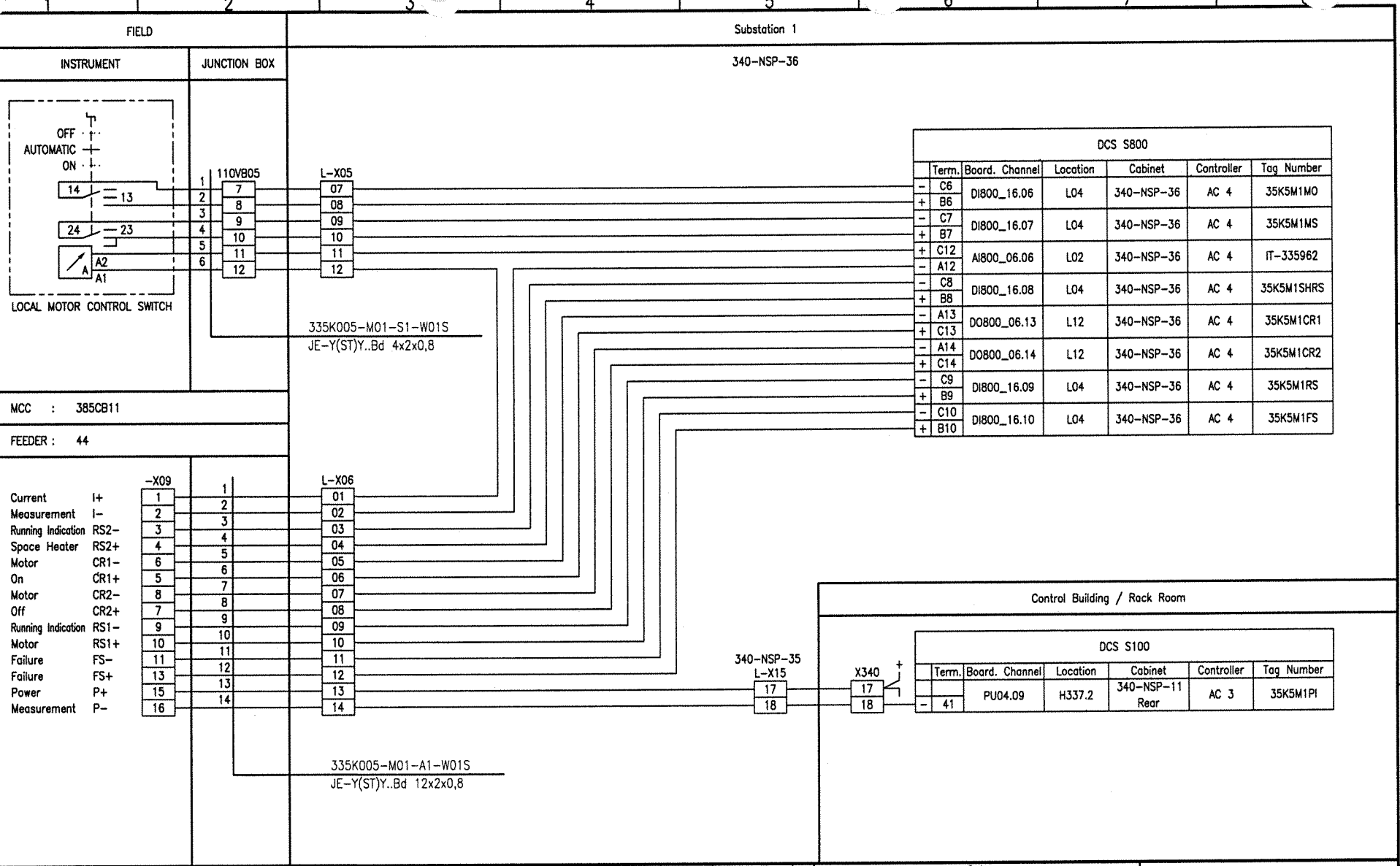
FIELD
Substation 1
INSTRUMENT
JUNCTION BOX
340-NSP-36
OFF
AUTOMATIC
ON
14
13
24
23
A2
A1
LOCAL MOTOR CONTROL SWITCH
110VB05
L-X05
335K005-M01-S1-W01S
JE-Y(ST)Y..Bd 4x2x0,8
MCC : 385CB11
FEEDER : 44
-X09
L-X06
Current I+
Measurement I-
Running Indication RS2-
Space Heater RS2+
Motor CR1-
On CR1+
Motor CR2-
Off CR2+
Running Indication RS1-
Motor RS1+
Failure FS-
Failure FS+
Power P+
Measurement P-
335K005-M01-A1-W01S
JE-Y(ST)Y..Bd 12x2x0,8
DCS S800
Term. Board. Channel Location Cabinet Controller Tag Number
C6 B6 DI800_16.06 L04 340-NSP-36 AC 4 35K5M1MO
C7 B7 DI800_16.07 L04 340-NSP-36 AC 4 35K5M1MS
C12 A12 AI800_06.06 L02 340-NSP-36 AC 4 IT-335962
C8 B8 DI800_16.08 L04 340-NSP-36 AC 4 35K5M1SHRS
A13 C13 DO800_06.13 L12 340-NSP-36 AC 4 35K5M1CR1
A14 C14 DO800_06.14 L12 340-NSP-36 AC 4 35K5M1CR2
C9 B9 DI800_16.09 L04 340-NSP-36 AC 4 35K5M1RS
C10 B10 DI800_16.10 L04 340-NSP-36 AC 4 35K5M1FS
Control Building / Rack Room
340-NSP-35
L-X15
X340
DCS S100
Term. Board. Channel Location Cabinet Controller Tag Number
41 PU04.09 H337.2 340-NSP-11 Rear AC 3 35K5M1PI
Document-ID-BAR-Code
01 20.09.06 Hie Hie 20.09.06 Heuer 20.09.06 Heuer AS BUILT
Rev. Date Name Date Name Date Name Description Acc. Code
Drawn/Prepared Checked Approved
UAN 01-3040
Code Document ID UD-EL-G00-FS-0001 Part Rev. 01 Group
Uhde
All rights reserved © Uhde GmbH
Pro. Unit TON Cat. Code Acc. Code Status
Con. Unit Type of Document DH Order No. Scale Tot. Sheets
Drawn 04.04.2005 Hielscher
Prepared 04.04.2005 Hohmann
Checked 04.04.2005 Heuer
Approved 04.04.2005 Heuer
AMMONIA / UREA PROJECT SUEZ II
Designation
Wiring diagram 335K005-M01
Store Location: Server \\p013040\013040-ADA
Store Location: Folder \Ei-ET\DH_el-wiring-diag\
Store Name 01-3040_335K005-M01_000_01.dwg
ISO A3
BORDER-A3_013040.dwg / AG03A3_013040.dwg / 17.05.2004

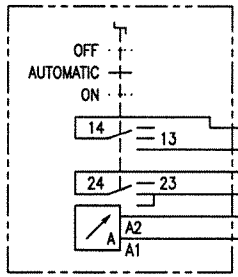

FIELD | Substation 1

INSTRUMENT | JUNCTION BOX | 340-NSP-36

110VB06

L-X09

335K006-M01-S1-W01S
JE-Y(ST)Y..Bd 4x2x0,8

MCC : 385CC12B

FEEDER : 26.10

-X2

R-X03

		-X2		R-X03
Current Measurement	I+	1	1	01
	I-	2	2	02
Running Indication	RS-	15	3	03
	RS+	16	4	04
Failure	FS-	19	5	05
Failure	FS+	20	6	06
Motor On/Off	CR-	12	7	07
	CR+	11	8	08

335K006-M01-A1-W01S
JE-Y(ST)Y..Bd 4x2x0,8

DCS S800

	Term.	Board. Channel	Location	Cabinet	Controller	Tag Number
-	C1	DI800_27.01	R05	340-NSP-36	AC 4	35K6M1MO
+	B1					
-	C2	DI800_27.02	R05	340-NSP-36	AC 4	35K6M1MS
+	B2					
-	C3	DI800_27.03	R05	340-NSP-36	AC 4	35K6M1RS
+	B3					
-	C4	DI800_27.04	R05	340-NSP-36	AC 4	35K6M1FS
+	B4					
-	A13	DO800_07.13	R08	340-NSP-36	AC 4	35K6M1CR
+	C13					

Document-ID-BAR-Code

Rev.	Date	Name (Drawn/Prepared)	Date	Name (Checked)	Date	Name (Approved)	Description	Acc. Code
01	20.09.06	Hie Hie	20.09.06	Heuer	20.09.06	Heuer	AS BUILT	

UAN	Document ID	Part	Rev.	Group
01-3040	UD-EL-G00-FS-0001		01	

Pro. Unit | TON | Cat. Code | Acc. Code | Status

Con. Unit | Type of Document: DH | Order No. | Scale | Tot. Sheets

	Date	Name
Drawn	04.04.2005	Hielscher
Prepared	04.04.2005	Hohmann
Checked	04.04.2005	Heuer
Approved	04.04.2005	Heuer

Store Location: Server \\p013040\013040-ADA
Store Location: Folder \Ei-ET\DH_el-wiring-diag\
Store Name 01-3040_335K006-M01_000_01.dwg

Uhde

All rights reserved © Uhde GmbH

AMMONIA / UREA PROJECT SUEZ II

Designation
Wiring diagram
335K006-M01

ISO A3

BORDER-A3_013040.dwg / A6D3A3_013040.dwg / 17.05.2004

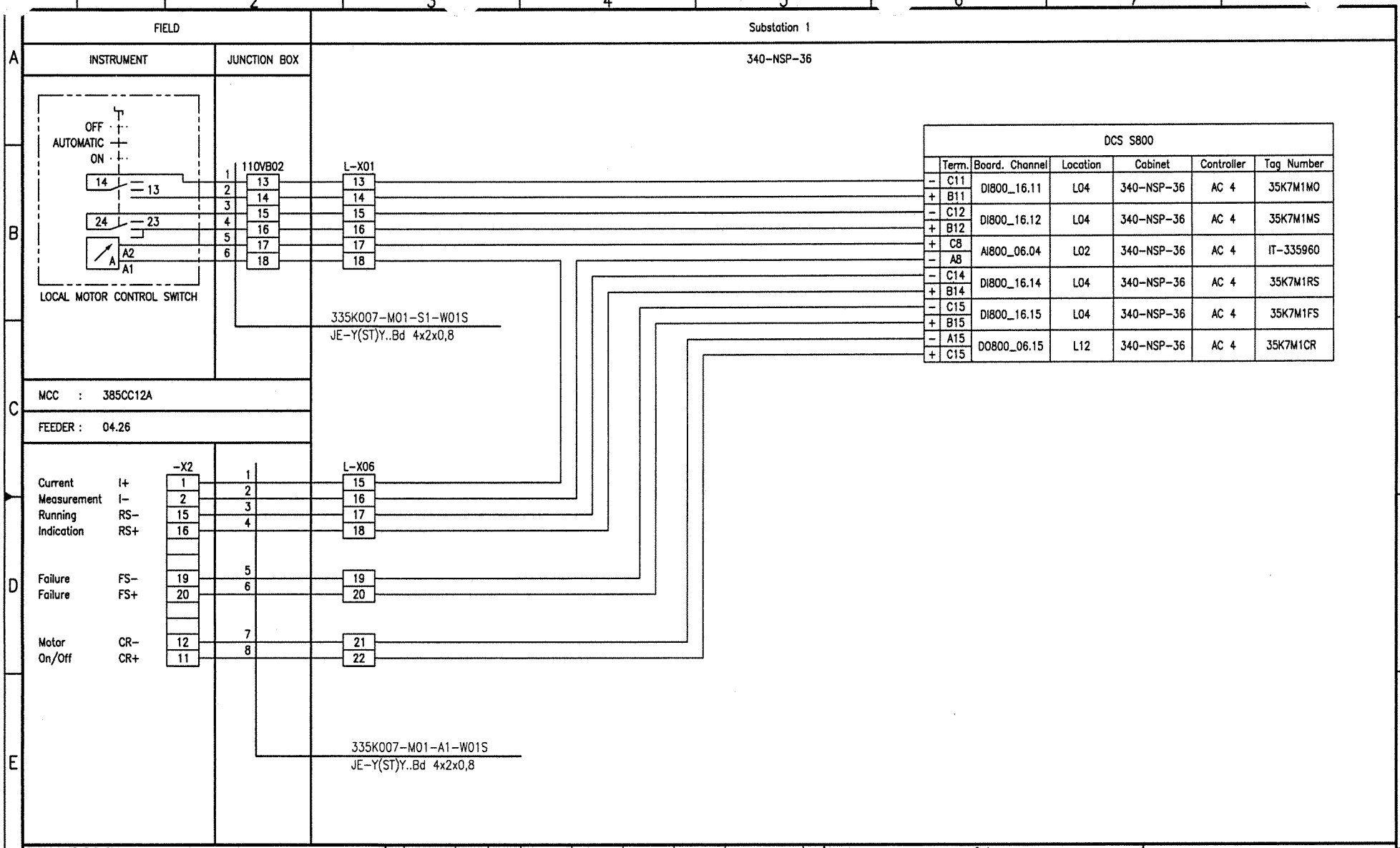

Document-ID-BAR-Code

Rev.	Date	Name (Drawn/Prepared)	Date	Name (Checked)	Date	Name (Approved)	Description	Acc. Code
01	20.09.06	Hie Hie	20.09.06	Heuer	20.09.06	Heuer	AS BUILT	

UAN	Document ID	Part	Rev.	Group
01-3040	UD-EL-G00-FS-0001		01	

Code

Uhde

All rights reserved © Uhde GmbH

Pro. Unit	TON	Cat. Code	Acc. Code	Status

Con. Unit	Type of Document	Order No.	Scale	Tot. Sheets
	DH			

	Date	Name
Drawn	04.04.2005	Hielscher
Prepared	04.04.2005	Hohmann
Checked	04.04.2005	Heuer
Approved	04.04.2005	Heuer

AMMONIA / UREA PROJECT SUEZ II

Designation
Wiring diagram
335K007-M01

Store Location: Server
\\p013040\013040-ADA

Store Location: Folder
\EI-ET\DH_el-wiring-diag\

Store Name
01-3040_335K007-M01_000_01.dwg

ISO A3

BORDER-A3_013040.dwg / AG03A3_013040.dwg / 17.05.2004

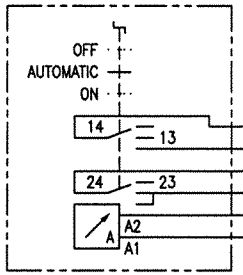

LOCAL MOTOR CONTROL SWITCH

FIELD | Substation 1

INSTRUMENT | JUNCTION BOX | 340-NSP-36

110VB01: 1, 2, 3, 4, 5, 6 — 25, 26, 27, 28, 29, 30

L-X07: 25, 26, 27, 28, 29, 30

335N001-M01-S1-W01S
JE-Y(ST)Y..Bd 4x2x0,8

MCC : 385CC12A

FEEDER : 18.08

		-X2		R-X14
Current	I+	1	1	09
Measurement	I-	2	2	10
Running	RS-	15	3	11
Indication	RS+	16	4	12
Failure	FS-	19	5	13
Failure	FS+	20	6	14
Motor	CR-	12	7	15
On/Off	CR+	11	8	16

335N001-M01-A1-W01S
JE-Y(ST)Y..Bd 4x2x0,8

DCS S800

	Term.	Board. Channel	Location	Cabinet	Controller	Tag Number
-	C5	DI800_28.05	R06	340-NSP-36	AC 4	35N1M1MO
+	B5					
-	C6	DI800_28.06	R06	340-NSP-36	AC 4	35N1M1MS
+	B6					
-	C7	DI800_28.07	R06	340-NSP-36	AC 4	35N1M1RS
+	B7					
-	C8	DI800_28.08	R06	340-NSP-36	AC 4	35N1M1FS
+	B8					
-	A10	D0800_08.10	R09	340-NSP-36	AC 4	35N1M1CR
+	C10					

Document-ID-BAR-Code

Rev.	Date	Name (Drawn/Prepared)	Date	Name (Checked)	Date	Name (Approved)	Description	Acc. Code
01	20.09.06	Hie Hie	20.09.06	Heuer	20.09.06	Heuer	AS BUILT	

UAN	Document ID	Part	Rev.	Group
01-3040	UD-EL-G00-FS-0001		01	

Code

Uhde

All rights reserved © Uhde GmbH

Pro. Unit	TON	Cat. Code	Acc. Code	Status
Con. Unit	Type of Document: DH	Order No.	Scale	Tot. Sheets

	Date	Name
Drawn	04.04.2005	Hielscher
Prepared	04.04.2005	Hohmann
Checked	04.04.2005	Heuer
Approved	04.04.2005	Heuer

AMMONIA / UREA PROJECT SUEZ II

Designation
Wiring diagram
335N001-M01

Store Location: Server
\\p013040\013040-ADA

Store Location: Folder
\Ei-ET\DH_el-wiring-diag\

Store Name
01-3040_335N001-M01_000_01.dwg

ISO A3

BORDER-A3_013040.dwg / AD3A3_013040.dwg / 17.05.2004

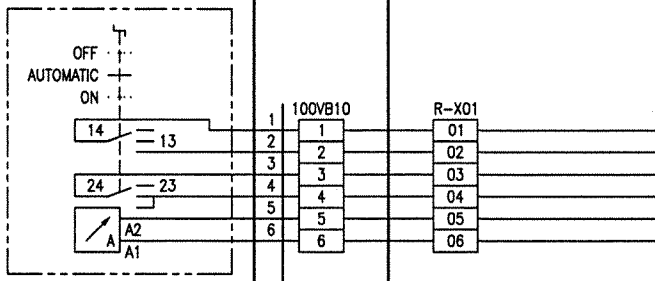

DCS S800

	Term.	Board. Channel	Location	Cabinet	Controller	Tag Number
-	C1	DI800_21.01	L09	340-NSP-36	AC 4	35P1AM1MO
+	B1					
-	C2	DI800_21.02	L09	340-NSP-36	AC 4	35P1AM1MS
+	B2					
+	C6	AI800_05.03	L01	340-NSP-36	AC 4	IT-335964
-	A6					
-	C3	DI800_21.03	L09	340-NSP-36	AC 4	35P1AM1RS
+	B3					
-	C4	DI800_21.04	L09	340-NSP-36	AC 4	35P1AM1FS
+	B4					
-	A4	DO800_07.04	R08	340-NSP-36	AC 4	35P1AM1CR
+	C4					

Document-ID-BAR-Code

Rev.	Date	Name	Date	Name	Date	Name	Description	Acc. Code
01	20.09.06	Hie	20.09.06	Heuer	20.09.06	Heuer	AS BUILT	
	Drawn/Prepared		Checked		Approved			

UAN	Document ID	Part	Rev.	Group
01-3040	UD-EL-G00-FS-0001		01	

Code

Pro. Unit	TON	Cat. Code	Acc. Code	Status
Con. Unit	Type of Document: DH	Order No.	Scale	Tot. Sheets

	Date	Name
Drawn	04.04.2005	Hielscher
Prepared	04.04.2005	Hohmann
Checked	04.04.2005	Heuer
Approved	04.04.2005	Heuer

AMMONIA / UREA PROJECT SUEZ II

Uhde

All rights reserved © Uhde GmbH

Designation
Wiring diagram
335P001AM01

Store Location: Server \\p013040\013040-ADA
Store Location: Folder \EI-ET\DH_el-wiring-diag\
Store Name 01-3040_335P001AM01_000_01.dwg

ISO A3

BORDER-A3_013040.dwg / A03A3_013040.dwg / 17.05.2004

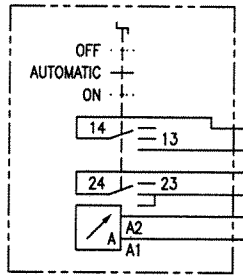

LOCAL MOTOR CONTROL SWITCH

FIELD | Substation 1

INSTRUMENT | JUNCTION BOX | 340-NSP-36

100VB10: 1, 2, 3, 4, 5, 6 → 7, 8, 9, 10, 11, 12

R-X01: 07, 08, 09, 10, 11, 12

335P001BM01-S1-W01S
JE-Y(ST)Y..Bd 4x2x0,8

MCC : 385CC12B

FEEDER : 28.29

		-X2		R-X03
Current Measurement	I+	1	1	17
	I-	2	2	18
Running Indication	RS-	15	3	19
	RS+	16	4	20
Failure	FS-	19	5	21
Failure	FS+	20	6	22
Motor On/Off	CR-	12	7	23
	CR+	11	8	24

335P001BM01-A1-W01S
JE-Y(ST)Y..Bd 4x2x0,8

DCS S800

	Term.	Board. Channel	Location	Cabinet	Controller	Tag Number
-	C1	DI800_22.01	L10	340-NSP-36	AC 4	35P1BM1MO
+	B1					
-	C2	DI800_22.02	L10	340-NSP-36	AC 4	35P1BM1MS
+	B2					
+	C6	AI800_06.03	L02	340-NSP-36	AC 4	IT-335965
-	A6					
-	C3	DI800_22.03	L10	340-NSP-36	AC 4	35P1BM1RS
+	B3					
-	C4	DI800_22.04	L10	340-NSP-36	AC 4	35P1BM1FS
+	B4					
-	A4	DO800_08.04	R09	340-NSP-36	AC 4	35P1BM1CR
+	C4					

Document-ID-BAR-Code

Rev.	Date	Name (Drawn/Prepared)	Date	Name (Checked)	Date	Name (Approved)	Description	Acc. Code
01	20.09.06	Hie	20.09.06	Heuer	20.09.06	Heuer	AS BUILT	

UAN	Document ID	Part	Rev.	Group
01-3040	UD-EL-G00-FS-0001		01	

Code

Pro. Unit | TON | Cat. Code | Acc. Code | Status

Con. Unit | Type of Document: DH | Order No. | Scale | Tot. Sheets

	Date	Name
Drawn	04.04.2005	Hielscher
Prepared	04.04.2005	Hohmann
Checked	04.04.2005	Heuer
Approved	04.04.2005	Heuer

AMMONIA / UREA PROJECT SUEZ II

Uhde

All rights reserved © Uhde GmbH

Designation
Wiring diagram
335P001BM01

Store Location: Server \\p013040\013040-ADA
Store Location: Folder \Ei-ET\DH_el-wiring-diag\
Store Name 01-3040_335P001BM01_000_01.dwg

ISO A3

BORDER-A3_013040.dwg / A03A3_013040.dwg / 17.05.2004

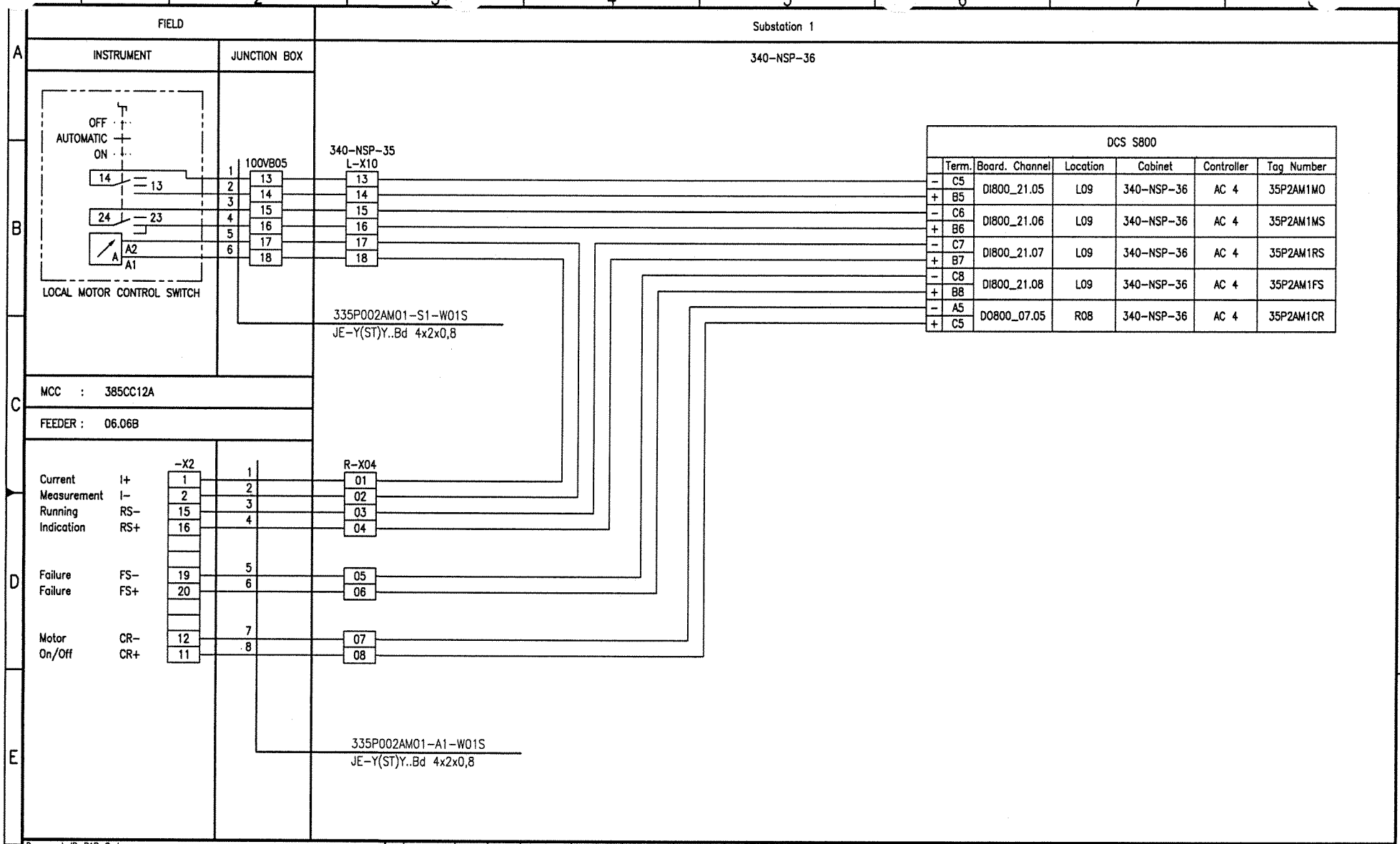

Document-ID-BAR-Code

Rev.	Date	Name (Drawn/Prepared)	Date	Name (Checked)	Date	Name (Approved)	Description	Acc. Code
01	20.09.06	Hie Hie	20.09.06	Heuer	20.09.06	Heuer	AS BUILT	

Pro. Unit	TON	Cat. Code	Acc. Code	Status
Con. Unit	Type of Document: DH	Order No.	Scale	Tot. Sheets

	Date	Name
Drawn	04.04.2005	Hielscher
Prepared	04.04.2005	Hohmann
Checked	04.04.2005	Heuer
Approved	04.04.2005	Heuer

Code: UAN 01-3040 | Document ID UD-EL-G00-FS-0001 | Part | Rev. 01 | Group

Uhde

All rights reserved © Uhde GmbH

AMMONIA / UREA PROJECT SUEZ II

Designation: Wiring diagram 335P002AM01

Store Location: Server \\p013040\013040-ADA
Store Location: Folder \Ei-ET\DH_el-wiring-diag\
Store Name: 01-3040_335P002AM01_000_01.dwg

ISO A3

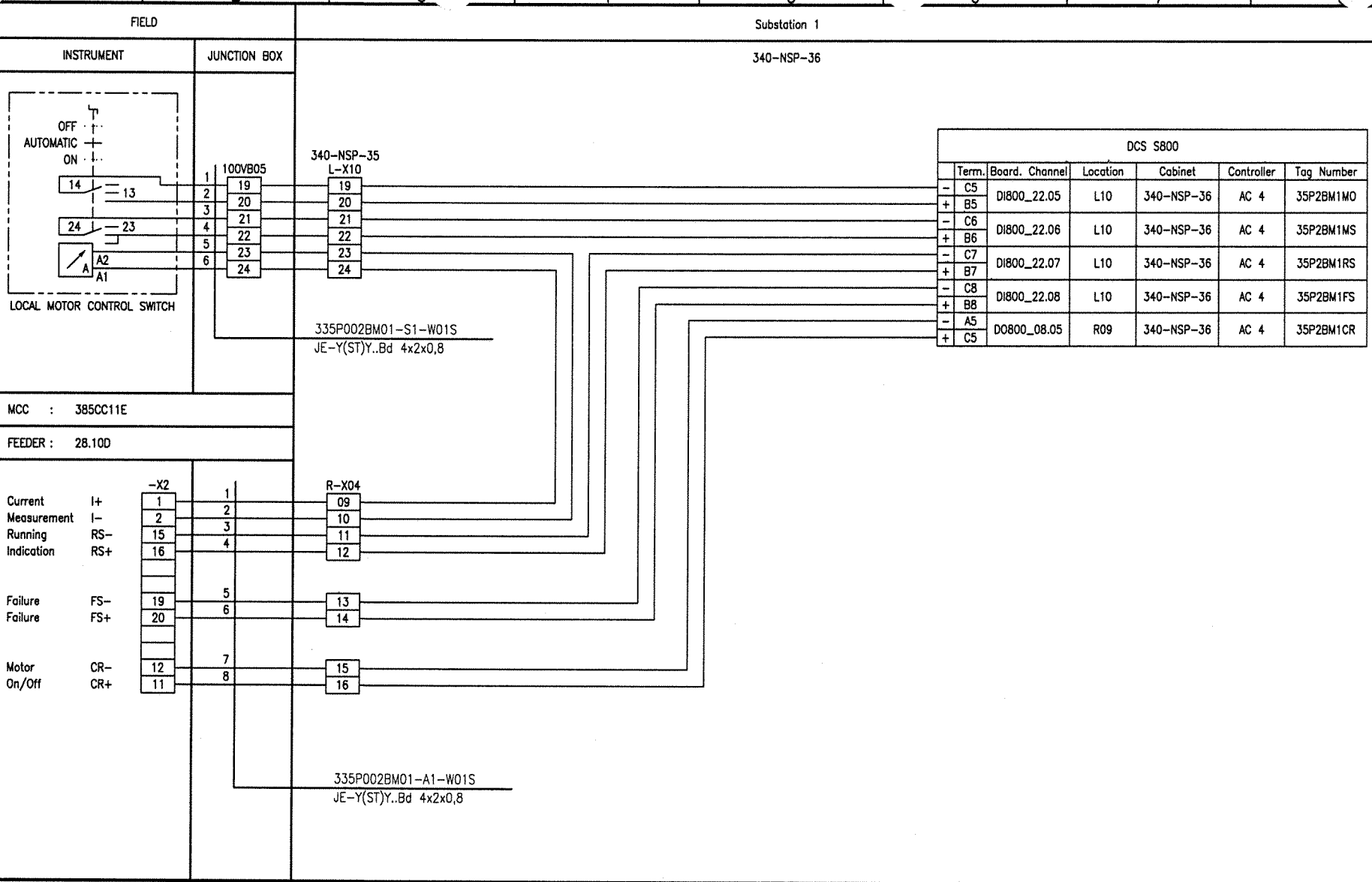

Document-ID-BAR-Code

Rev.	Date	Name (Drawn/Prepared)	Date	Name (Checked)	Date	Name (Approved)	Description	Acc. Code
01	20.09.06	Hie Hie	20.09.06	Heuer	20.09.06	Heuer	AS BUILT	

UAN	Document ID	Port	Rev.	Group
01-3040	UD-EL-G00-FS-0001		01	

Code

Uhde

All rights reserved © Uhde GmbH

Pro. Unit	TON	Cat. Code	Acc. Code	Status
Con. Unit	Type of Document: DH	Order No.	Scale	Tot. Sheets

	Date	Name
Drawn	04.04.2005	Hielscher
Prepared	04.04.2005	Hohmann
Checked	04.04.2005	Heuer
Approved	04.04.2005	Heuer

AMMONIA / UREA PROJECT SUEZ II

Designation
Wiring diagram
335P002BM01

Store Location: Server \\p013040\013040-ADA
Store Location: Folder \EI-ET\DH_el-wiring-diag\
Store Name 01-3040_335P002BM01_000_01.dwg

ISO A3

BORDER-A3_013040.dwg / A03A3_013040.dwg / 17.05.2004

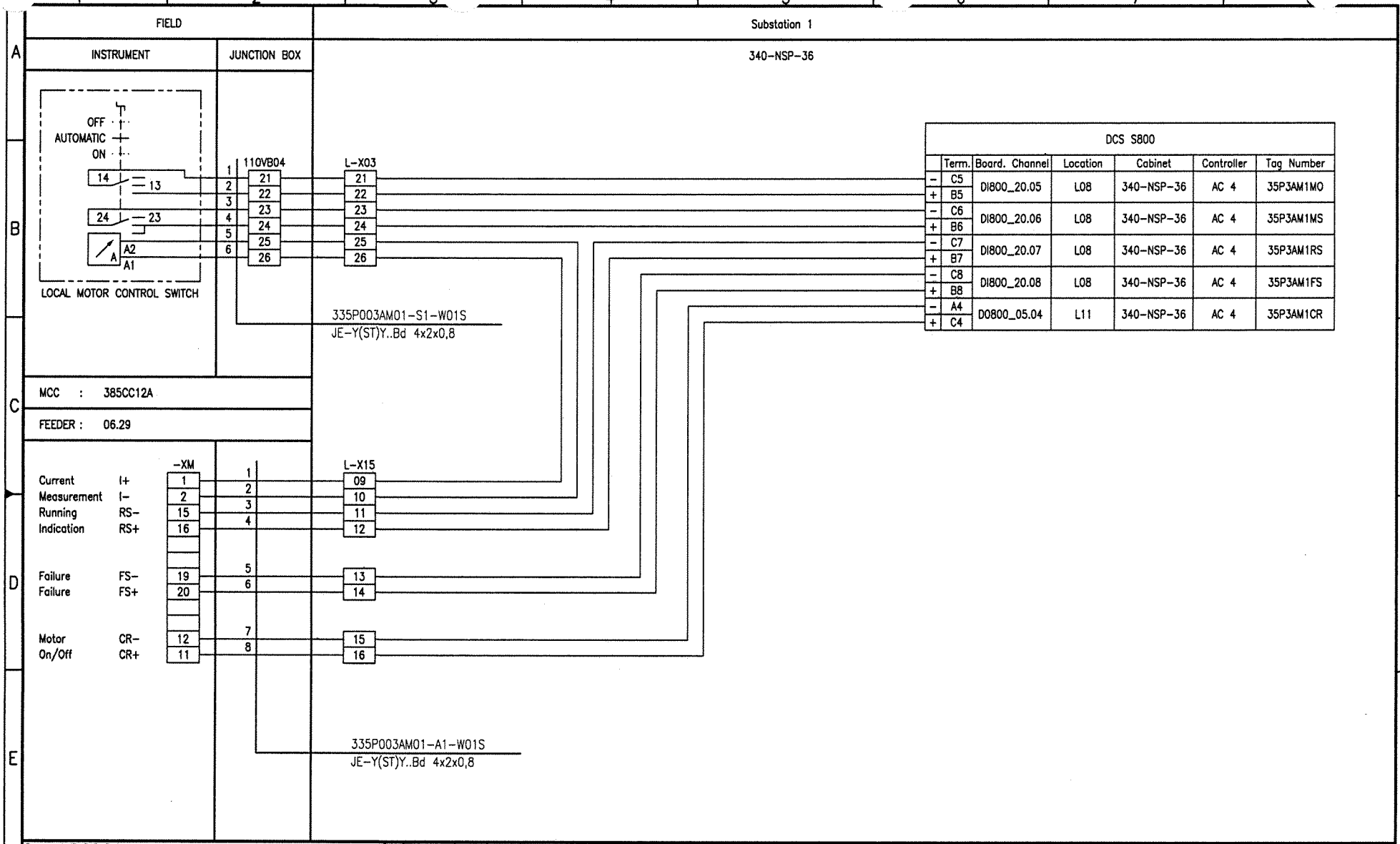

Document-ID-BAR-Code

Rev.	Date	Name (Drawn/Prepared)	Date	Name (Checked)	Date	Name (Approved)	Description	Acc. Code
01	20.09.06	Hie Hie	20.09.06	Heuer	20.09.06	Heuer	AS BUILT	

UAN	Document ID	Part	Rev.	Group
01-3040	UD-EL-G00-FS-0001		01	

Code

Uhde

All rights reserved © Uhde GmbH

Pro. Unit	TON	Cat. Code	Acc. Code	Status
Con. Unit	Type of Document: DH	Order No.	Scale	Tot. Sheets

	Date	Name
Drawn	04.04.2005	Hielscher
Prepared	04.04.2005	Hohmann
Checked	04.04.2005	Heuer
Approved	04.04.2005	Heuer

AMMONIA / UREA PROJECT SUEZ II

Designation
Wiring diagram
335P003AM01

Store Location: Server \\p013040\013040-ADA
Store Location: Folder \EI-ET\DH_el-wiring-diag\
Store Name 01-3040_335P003AM01_000_01.dwg

ISO A3

BORDER-A3_013040.dwg / A0G3A3_013040.dwg / 17.05.2004

FIELD

INSTRUMENT | JUNCTION BOX

Substation 1

340-NSP-36

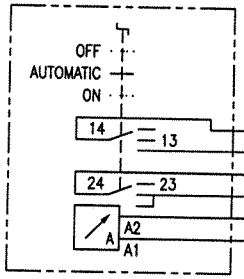

LOCAL MOTOR CONTROL SWITCH

110VB01

L-X07

335P003BM01-S1-W01S
JE-Y(ST)Y..Bd 4x2x0,8

MCC : 385CC12B

FEEDER : 26.29

-X2

R-X06

		-X2	110VB01	R-X06
Current Measurement	I+	1	1	17
	I-	2	2	18
Running Indication	RS-	15	3	19
	RS+	16	4	20
Failure	FS-	19	5	21
Failure	FS+	20	6	22
Motor On/Off	CR-	12	7	23
	CR+	11	8	24

335P003BM01-A1-W01S
JE-Y(ST)Y..Bd 4x2x0,8

DCS S800

	Term.	Board. Channel	Location	Cabinet	Controller	Tag Number
-	C5	DI800_25.05	R03	340-NSP-36	AC 4	35P3BM1MO
+	B5					
-	C6	DI800_25.06	R03	340-NSP-36	AC 4	35P3BM1MS
+	B6					
-	C7	DI800_25.07	R03	340-NSP-36	AC 4	35P3BM1RS
+	B7					
-	C8	DI800_25.08	R03	340-NSP-36	AC 4	35P3BM1FS
+	B8					
-	A12	DO800_07.12	R08	340-NSP-36	AC 4	35P3BM1CR
+	C12					

Document-ID-BAR-Code

Rev.	Date	Name (Drawn/Prepared)	Date	Name (Checked)	Date	Name (Approved)	Description	Acc. Code
01	20.09.06	Hie Hie	20.09.06	Heuer	20.09.06	Heuer	AS BUILT	

UAN	Code: Document ID	Part	Rev.	Group
01-3040	UD-EL-G00-FS-0001		01	

Uhde

All rights reserved © Uhde GmbH

Pro. Unit	TON	Cat. Code	Acc. Code	Status
Con. Unit	Type of Document: DH	Order No.	Scale	Tot. Sheets

	Date	Name
Drawn	04.04.2005	Hielscher
Prepared	04.04.2005	Hohmann
Checked	04.04.2005	Heuer
Approved	04.04.2005	Heuer

AMMONIA / UREA PROJECT SUEZ II

Designation: Wiring diagram 335P003BM01

Store Location: Server \\p013040\013040-ADA

Store Location: Folder \Ei-ET\DH_el-wiring-diag\

Store Name 01-3040_335P003BM01_000_01.dwg

ISO A3

BORDER-A3_013040.dwg / AG03A3_013040.dwg / 17.05.2004

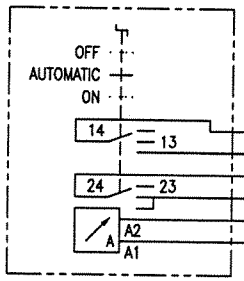

FIELD

INSTRUMENT | JUNCTION BOX

Substation 1

340-NSP-36

MCC : 385CC11E

FEEDER : 51.10A

DCS S800						
	Term.	Board. Channel	Location	Cabinet	Controller	Tag Number
-	C9	DI800_21.09	L09	340-NSP-36	AC 4	35P4AM1MO
+	B9					
-	C10	DI800_21.10	L09	340-NSP-36	AC 4	35P4AM1MS
+	B10					
-	C11	DI800_21.11	L09	340-NSP-36	AC 4	35P4AM1RS
+	B11					
-	C12	DI800_21.12	L09	340-NSP-36	AC 4	35P4AM1FS
+	B12					
-	A6	DO800_07.06	R08	340-NSP-36	AC 4	35P4AM1CR
+	C6					

Document-ID-BAR-Code

Rev.	Date	Name (Drawn/Prepared)	Date	Name (Checked)	Date	Name (Approved)	Description	Acc. Code
01	20.09.06	Hie Hie	20.09.06	Heuer	20.09.06	Heuer	AS BUILT	

UAN	Code: Document ID	Part	Rev.	Group
01-3040	UD-EL-G00-FS-0001		01	

Uhde

All rights reserved © Uhde GmbH

Pro. Unit	TON	Cat. Code	Acc. Code	Status
Con. Unit	Type of Document: DH	Order No.	Scale	Tot. Sheets

	Date	Name
Drawn	04.04.2005	Hielscher
Prepared	04.04.2005	Hohmann
Checked	04.04.2005	Heuer
Approved	04.04.2005	Heuer

AMMONIA / UREA PROJECT SUEZ II

Designation: Wiring diagram 335P004AM01

Store Location: Server \\p013040\013040-ADA

Store Location: Folder \EI-ET\DH_el-wiring-diag\

Store Name: 01-3040_335P004AM01_000_01.dwg

ISO A3

BORDER-A3_013040.dwg / AG03A3_013040.dwg / 17.05.2004

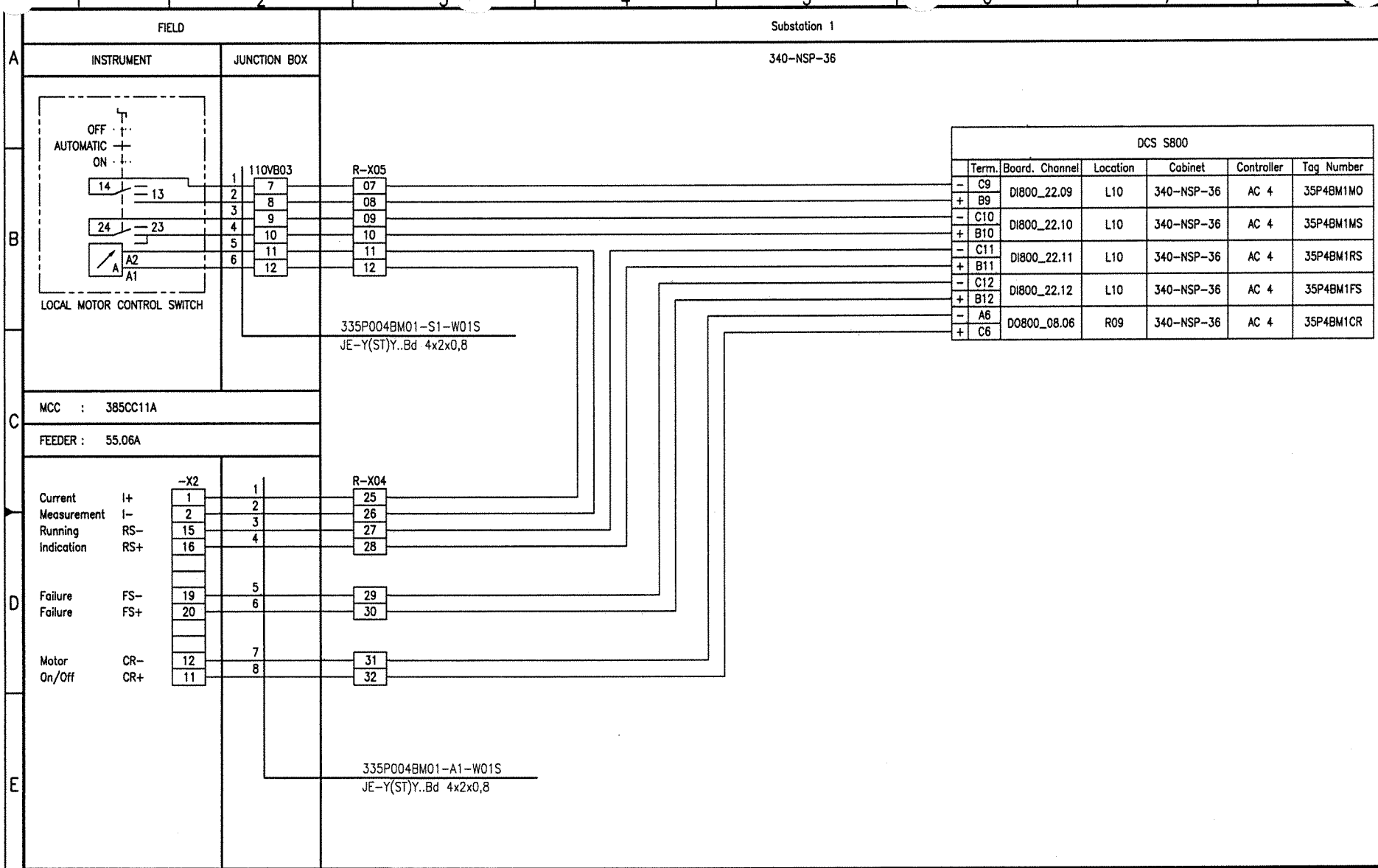

Document-ID-BAR-Code

Rev.	Date	Name (Drawn/Prepared)	Date	Name (Checked)	Date	Name (Approved)	Description	Acc. Code
01	20.09.06	Hie Hie	20.09.06	Heuer	20.09.06	Heuer	AS BUILT	

Pro. Unit	TON	Cat. Code	Acc. Code	Status

Con. Unit	Type of Document	Order No.	Scale	Tot. Sheets
	DH			

	Date	Name
Drawn	04.04.2005	Hielscher
Prepared	04.04.2005	Hohmann
Checked	04.04.2005	Heuer
Approved	04.04.2005	Heuer

Code: UAN 01-3040 | Document ID UD-EL-G00-FS-0001 | Part | Rev. 01 | Group

Uhde

All rights reserved © Uhde GmbH

AMMONIA / UREA PROJECT SUEZ II

Designation: Wiring diagram 335P004BM01

Store Location: Server \\p013040\013040-ADA
Store Location: Folder \EI-ET\DH_el-wiring-diag\
Store Name 01-3040_335P004BM01_000_01.dwg

ISO A3

BORDER-A3_013040.dwg / AG03A3_013040.dwg / 17.05.2004

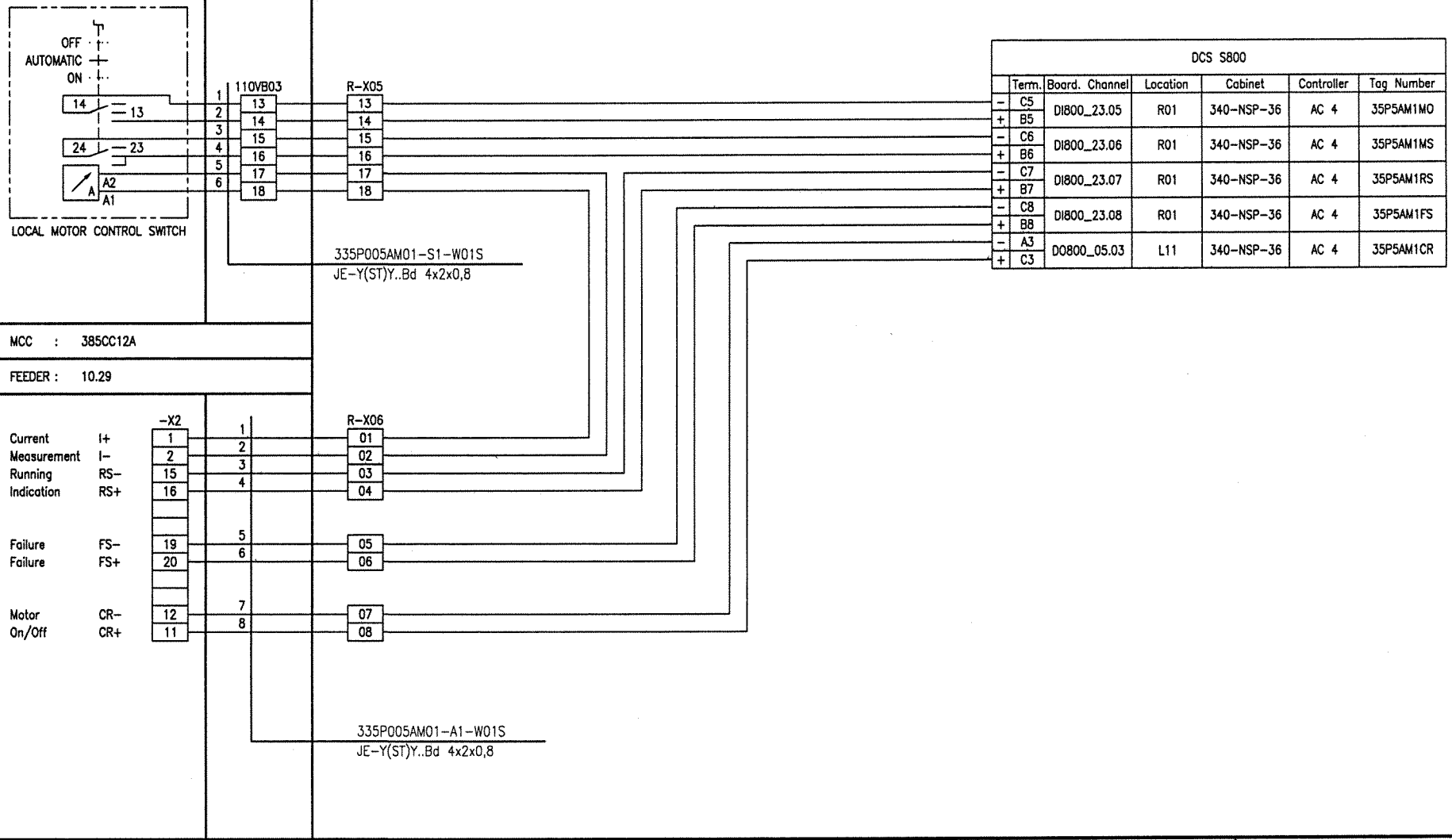

DCS S800

	Term.	Board. Channel	Location	Cabinet	Controller	Tag Number
-	C5	DI800_23.05	R01	340-NSP-36	AC 4	35P5AM1MO
+	B5					
-	C6	DI800_23.06	R01	340-NSP-36	AC 4	35P5AM1MS
+	B6					
-	C7	DI800_23.07	R01	340-NSP-36	AC 4	35P5AM1RS
+	B7					
-	C8	DI800_23.08	R01	340-NSP-36	AC 4	35P5AM1FS
+	B8					
-	A3	DO800_05.03	L11	340-NSP-36	AC 4	35P5AM1CR
+	C3					

Document-ID-BAR-Code

Rev.	Date	Name	Date	Name	Date	Name	Description	Acc. Code
01	20.09.06	Hie	20.09.06	Heuer	20.09.06	Heuer	AS BUILT	
	Drawn/Prepared		Checked		Approved			

UAN	Document ID	Part	Rev.	Group
01-3040	UD-EL-G00-FS-0001		01	

Code

Uhde

All rights reserved © Uhde GmbH

Pro. Unit	TON	Cat. Code	Acc. Code	Status
Con. Unit	Type of Document: DH	Order No.	Scale	Tot. Sheets

	Date	Name
Drawn	04.04.2005	Hielscher
Prepared	04.04.2005	Hohmann
Checked	04.04.2005	Heuer
Approved	04.04.2005	Heuer

AMMONIA / UREA PROJECT SUEZ II

Designation
Wiring diagram
335P005AM01

Store Location: Server \\p013040\013040-ADA
Store Location: Folder \Ei-ET\DH_el-wiring-diag\
Store Name 01-3040_335P005AM01_000_01.dwg

ISO A3

BORDER-A3_013040.dwg / AG3A3_013040.dwg / 17.05.2004

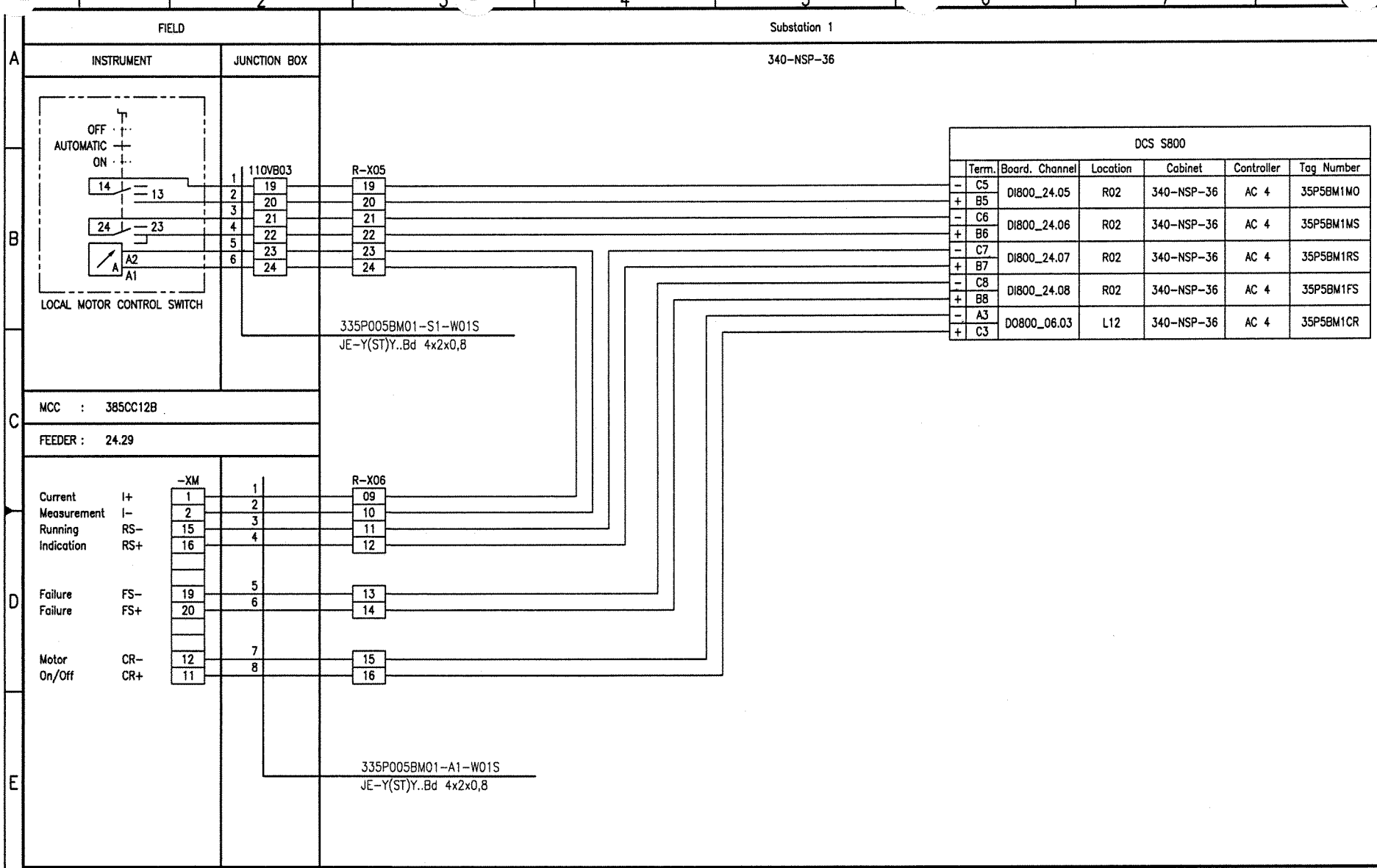

Document-ID-BAR-Code

Rev.	Date	Name (Drawn/Prepared)	Date	Name (Checked)	Date	Name (Approved)	Description	Acc. Code
01	20.09.06	Hie Hie	20.09.06	Heuer	20.09.06	Heuer	AS BUILT	

UAN	Document ID	Part	Rev.	Group
01-3040	UD-EL-G00-FS-0001		01	

Code

Uhde

All rights reserved © Uhde GmbH

Pro. Unit	TON	Cat. Code	Acc. Code	Status
Con. Unit	Type of Document: DH	Order No.	Scale	Tot. Sheets

	Date	Name
Drawn	04.04.2005	Hielscher
Prepared	04.04.2005	Hohmann
Checked	04.04.2005	Heuer
Approved	04.04.2005	Heuer

AMMONIA / UREA PROJECT SUEZ II

Designation
Wiring diagram
335P005BM01

Store Location: Server \\p013040\013040-ADA
Store Location: Folder \EI-ET\DH_el-wiring-diag\
Store Name 01-3040_335P005BM01_000_01.dwg

ISO A3

BORDER-A3_013040.dwg / AG03A3_013040.dwg / 17.05.2004

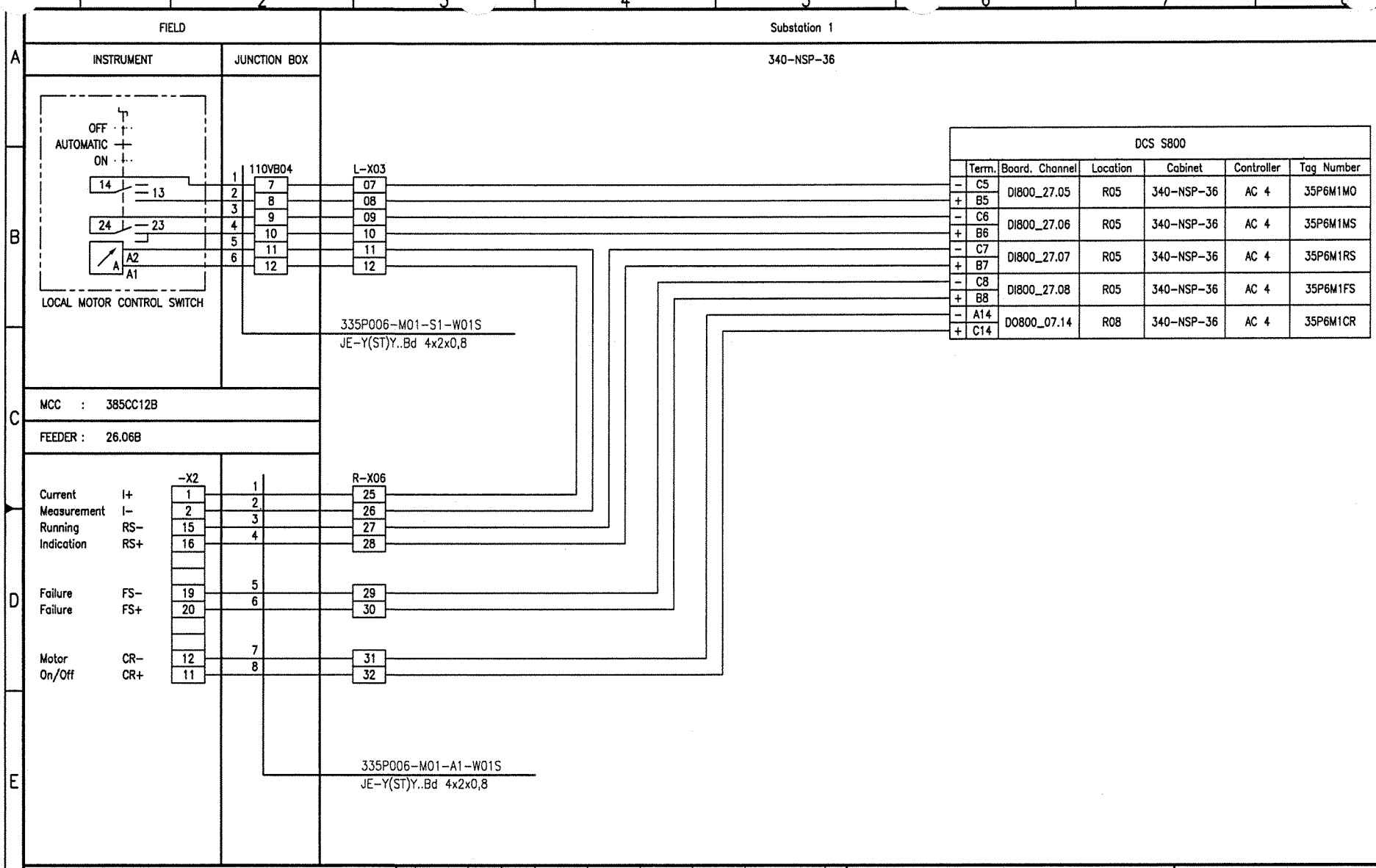

Document-ID-BAR-Code

Rev.	Date	Name (Drawn/Prepared)	Date	Name (Checked)	Date	Name (Approved)	Description	Acc. Code
01	20.09.06	Hie Hie	20.09.06	Heuer	20.09.06	Heuer	AS BUILT	

Pro. Unit	TON	Cat. Code	Acc. Code	Status

Con. Unit	Type of Document	Order No.	Scale	Tot. Sheets
	DH			

	Date	Name
Drawn	04.04.2005	Hielscher
Prepared	04.04.2005	Hohmann
Checked	04.04.2005	Heuer
Approved	04.04.2005	Heuer

Code

UAN	Document ID	Part	Rev.	Group
01-3040	UD-EL-G00-FS-0001		01	

Uhde

All rights reserved © Uhde GmbH

AMMONIA / UREA PROJECT SUEZ II

Designation
Wiring diagram
335P006-M01

Store Location: Server
\\p013040\013040-ADA

Store Location: Folder
\EI-ET\DH_el-wiring-diag\

Store Name
01-3040_335P006-M01_000_01.dwg

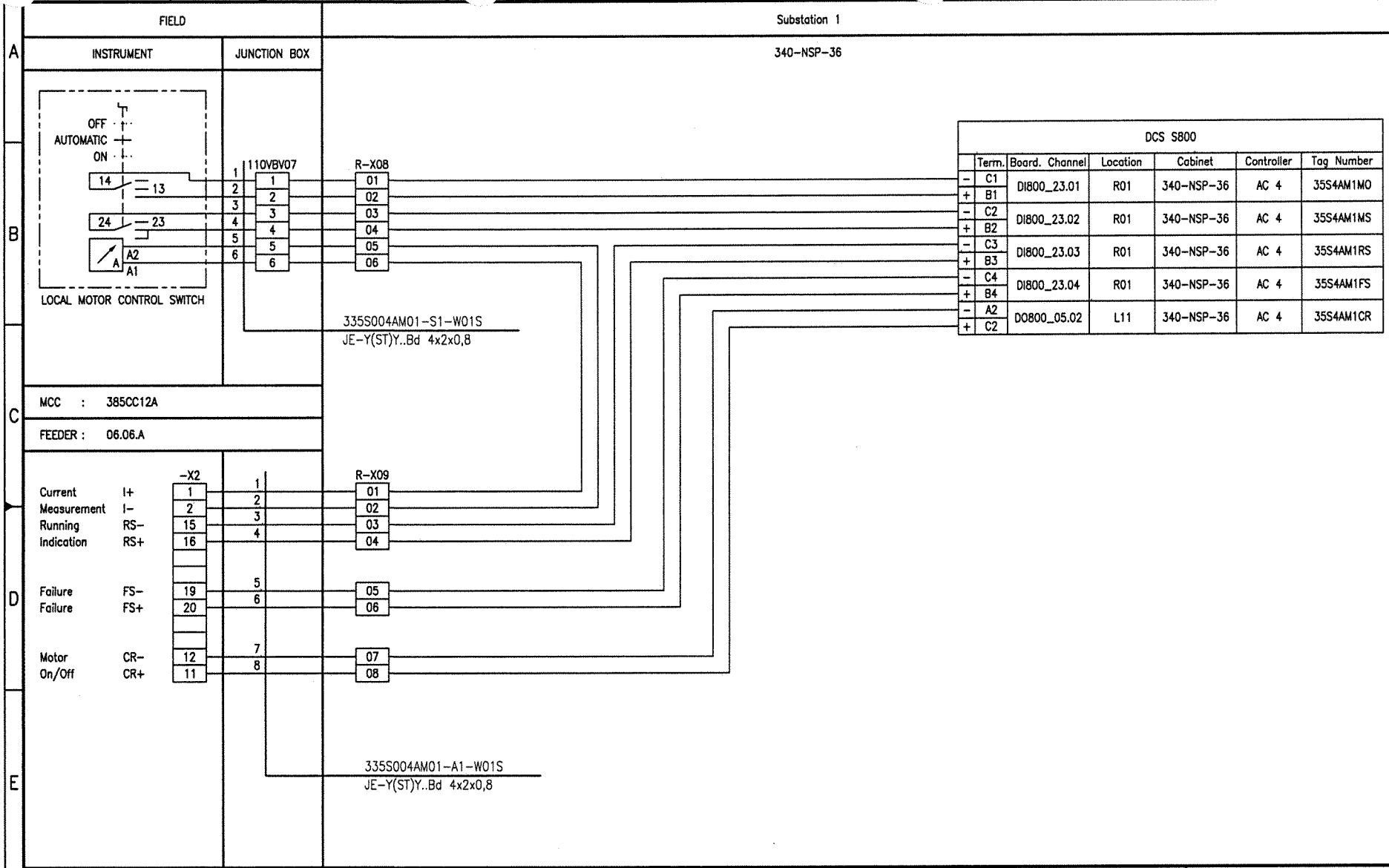

Document-ID-BAR-Code

Rev.	Date	Name	Date	Name	Date	Name	Description	Acc. Code
01	20.09.06	Hie	20.09.06	Heuer	20.09.06	Heuer	AS BUILT	
	Drawn/Prepared		Checked		Approved			

Pro. Unit	TON	Cat. Code	Acc. Code	Status
Con. Unit	Type of Document: DH	Order No.	Scale	Tot. Sheets

	Date	Name
Drawn	04.04.2005	Hielscher
Prepared	04.04.2005	Hohmann
Checked	04.04.2005	Heuer
Approved	04.04.2005	Heuer

Code: UAN 01-3040 | Document ID UD-EL-G00-FS-0001 | Part | Rev. 01 | Group

Uhde

All rights reserved © Uhde GmbH

AMMONIA / UREA PROJECT SUEZ II

Designation: Wiring diagram 335S004AM01

Store Location: Server \\p013040\013040-ADA
Store Location: Folder \Ei-ET\DH_el-wiring-diag\
Store Name 01-3040_335S004AM01_000_01.dwg

ISO A3

BORDER-A3_013040.dwg / AG03A3_013040.dwg / 17.05.2004

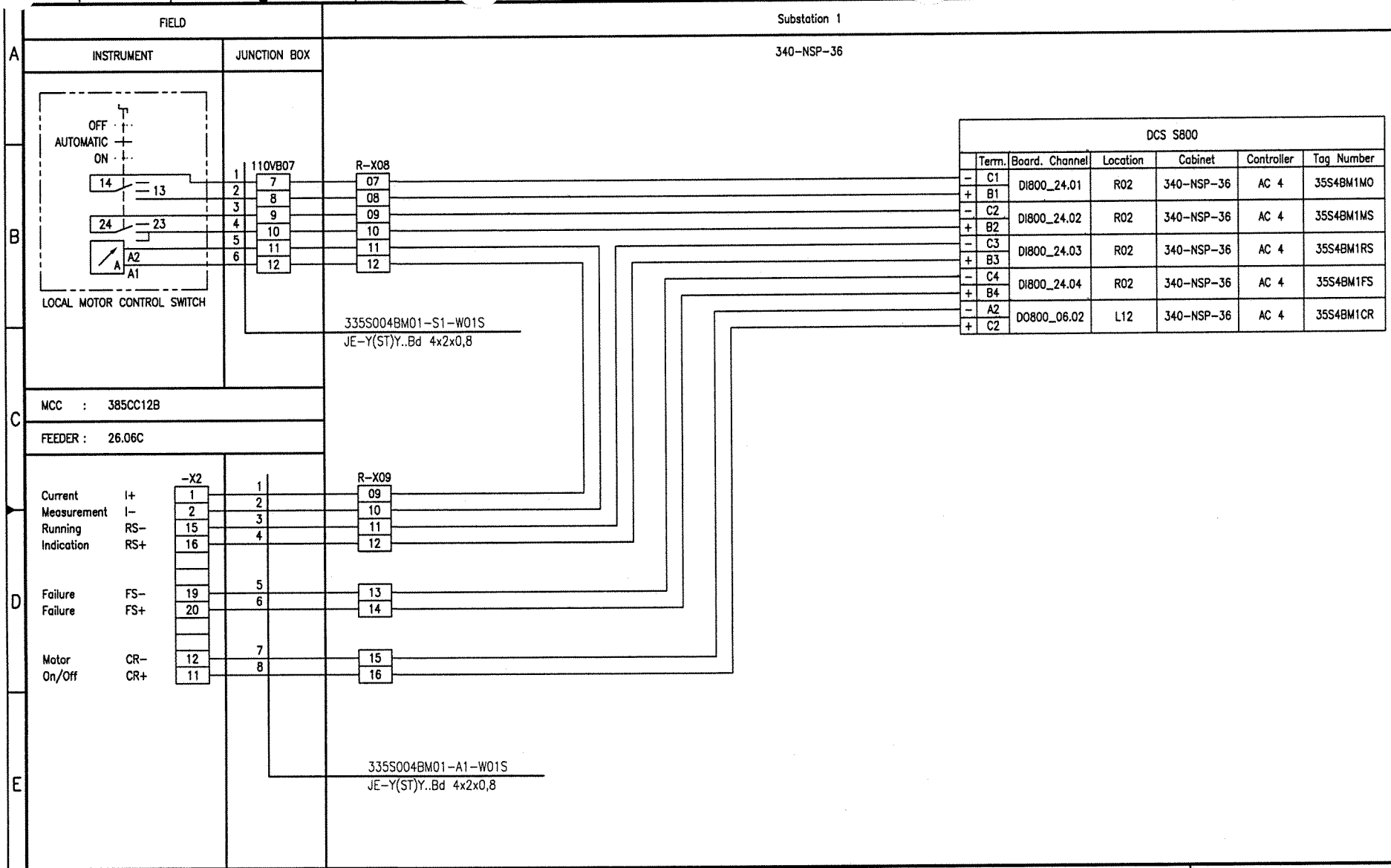

Document-ID-BAR-Code

Rev.	Date	Name	Date	Name	Date	Name	Description	Acc. Code
01	20.09.06	Hie	20.09.06	Heuer	20.09.06	Heuer	AS BUILT	
	Drawn/Prepared		Checked		Approved			

UAN	Document ID	Port	Rev.	Group
01-3040	UD-EL-G00-FS-0001		01	

Code

Pro. Unit	TON	Cat. Code	Acc. Code	Status

Con. Unit	Type of Document	Order No.	Scale	Tot. Sheets
	DH			

	Date	Name
Drawn	04.04.2005	Hielscher
Prepared	04.04.2005	Hohmann
Checked	04.04.2005	Heuer
Approved	04.04.2005	Heuer

Uhde

All rights reserved © Uhde GmbH

AMMONIA / UREA PROJECT SUEZ II

Designation
Wiring diagram
335S004BM01

Store Location: Server
\\p013040\013040-ADA

Store Location: Folder
\EI-ET\DH_el-wiring-diag\

Store Name
01-3040_335S004BM01_000_01.dwg

ISO A3

BORDER-A3_013040.dwg / A03A3_013040.dwg / 17.05.2004

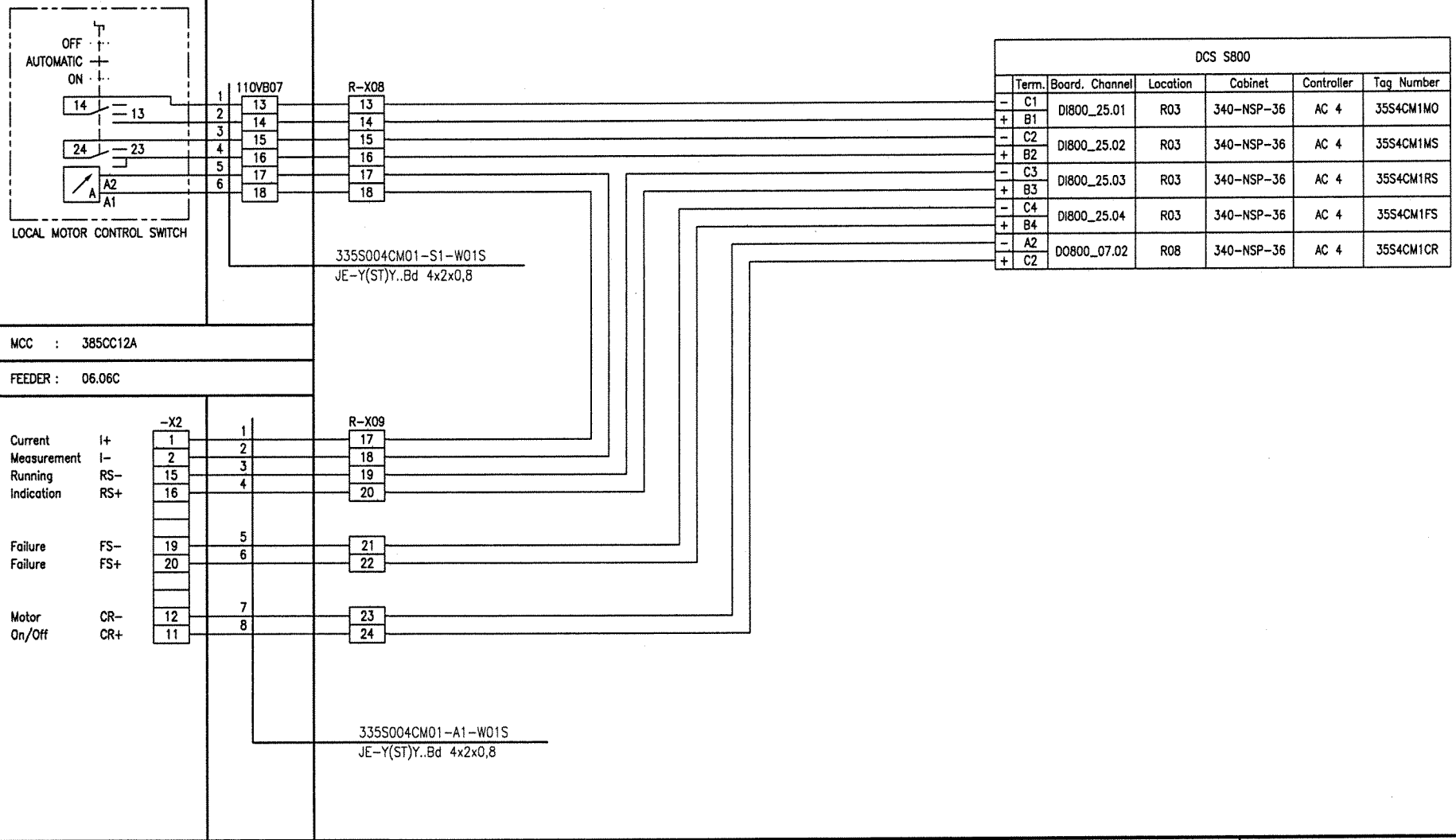

Rev.	Date	Name	Date	Name	Date	Name	Description	Acc. Code
01	20.09.06	Hie	20.09.06	Heuer	20.09.06	Heuer	AS BUILT	
	Drawn/Prepared		Checked		Approved			

Document-ID-BAR-Code

Pro. Unit	TON	Cat. Code	Acc. Code	Status
Con. Unit	Type of Document: DH	Order No.	Scale	Tot. Sheets

	Date	Name
Drawn	04.04.2005	Hielscher
Prepared	04.04.2005	Hohmann
Checked	04.04.2005	Heuer
Approved	04.04.2005	Heuer

Code: UAN 01-3040 | Document ID UD-EL-G00-FS-0001 | Part | Rev. 01 | Group

Uhde

All rights reserved © Uhde GmbH

AMMONIA / UREA PROJECT SUEZ II

Designation: Wiring diagram 335S004CM01

Store Location: Server \\p013040\013040-ADA
Store Location: Folder \EI-ET\DH_el-wiring-diag\
Store Name 01-3040_335S004CM01_000_01.dwg

ISO A3

BORDER-A3_013040.dwg / AG03A3_013040.dwg / 17.05.2004

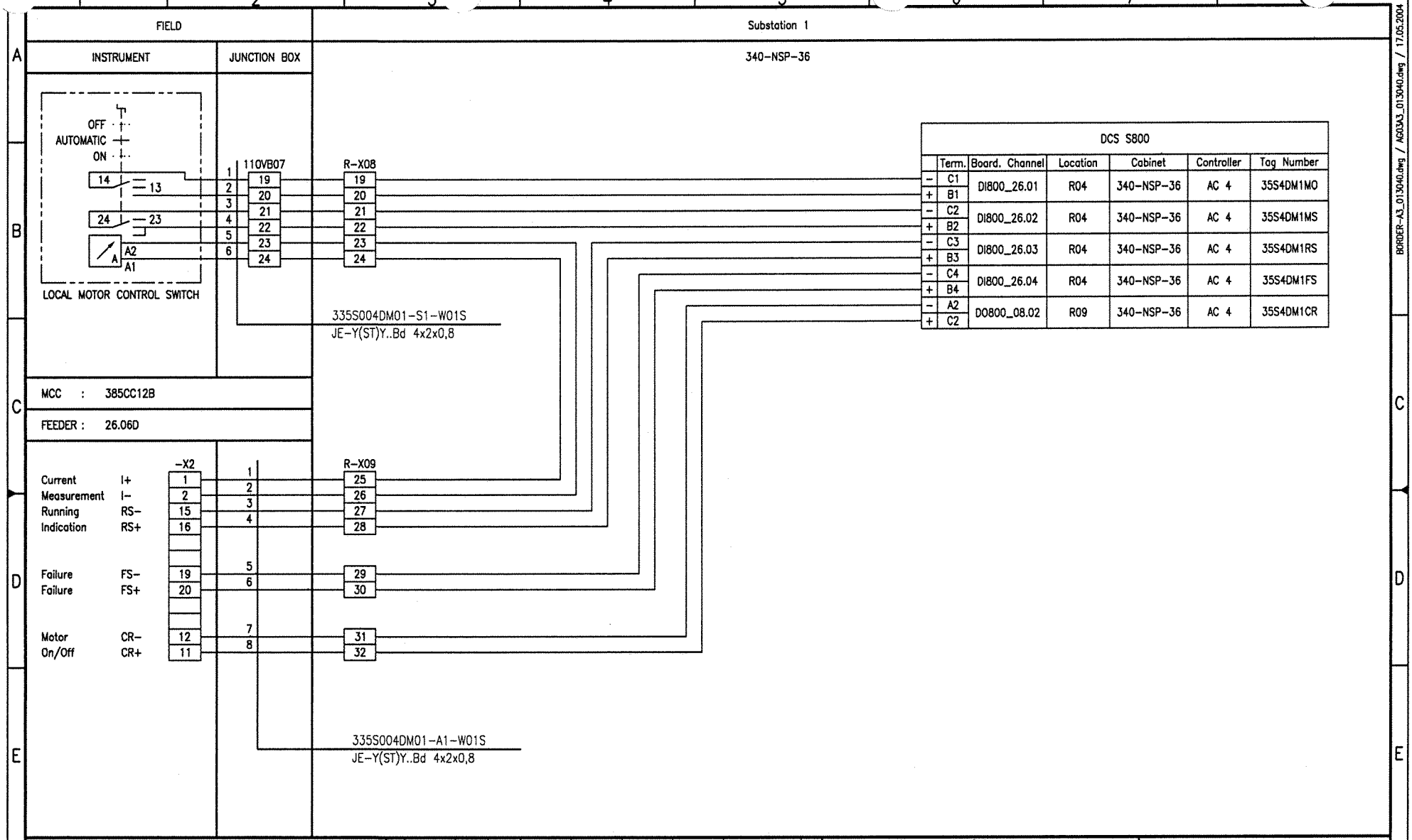

Document-ID-BAR-Code

Rev.	Date	Name (Drawn/Prepared)	Date	Name (Checked)	Date	Name (Approved)	Description	Acc. Code
01	20.09.06	Hie Hie	20.09.06	Heuer	20.09.06	Heuer	AS BUILT	

UAN	Document ID	Part	Rev.	Group
01-3040	UD-EL-G00-FS-0001		01	

Code

Uhde

All rights reserved © Uhde GmbH

Pro. Unit	TON	Cat. Code	Acc. Code	Status

Con. Unit	Type of Document	Order No.	Scale	Tot. Sheets
	DH			

	Date	Name
Drawn	04.04.2005	Hielscher
Prepared	04.04.2005	Hohmann
Checked	04.04.2005	Heuer
Approved	04.04.2005	Heuer

AMMONIA / UREA PROJECT SUEZ II

Designation
Wiring diagram
335S004DM01

Store Location: Server \\p013040\013040-ADA
Store Location: Folder \EI-ET\DH_el-wiring-diag\
Store Name 01-3040_335S004DM01_000_01.dwg

BORDER-A3_013040.dwg / AG03A3_013040.dwg / 17.05.2004

ISO A3

FIELD		Substation 1
INSTRUMENT	JUNCTION BOX	340-NSP-36

MCC : 385CC12A

FEEDER : +12.20

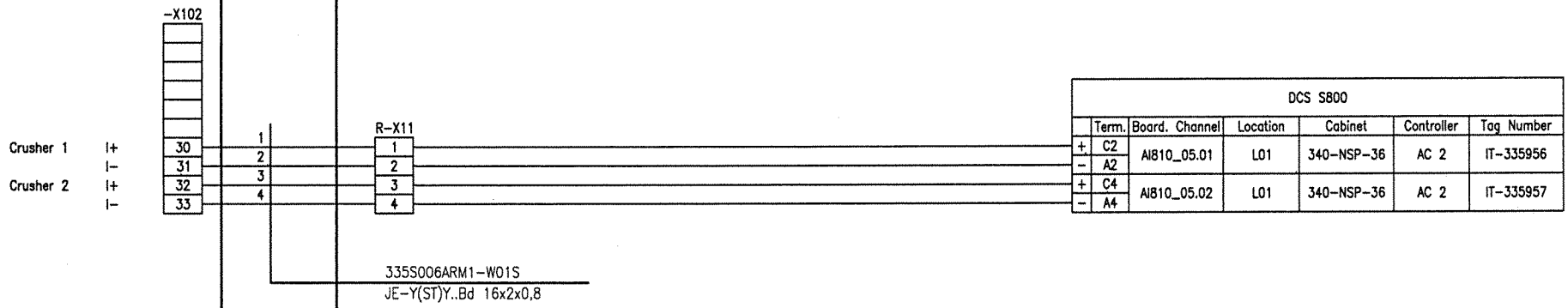

DCS S800						
	Term.	Board. Channel	Location	Cabinet	Controller	Tag Number
+	C2	AI810_05.01	L01	340-NSP-36	AC 2	IT-335956
-	A2					
+	C4	AI810_05.02	L01	340-NSP-36	AC 2	IT-335957
-	A4					

Document-ID-BAR-Code

Rev.	Date	Name	Date	Name	Date	Name	Description	Acc. Code
		Drawn/Prepared		Checked		Approved		

Pro. Unit	TON	Cat. Code	Acc. Code	Status
Con. Unit	Type of Document: DH	Order No.	Scale	Tot. Sheets

	Date	Name
Drawn	20.09.2006	Hielscher
Prepared	20.09.2006	Hielscher
Checked	20.09.2006	Heuer
Approved	20.09.2006	Heuer

UAN	Code: Document ID	Part	Rev.	Group
01-3040	UD-EL-G00-FS-0001		00	

Uhde

All rights reserved © Uhde GmbH

AMMONIA / UREA PROJECT SUEZ II

Designation: Wiring diagram 335S006ARM1

Store Location: Server \\p013040\013040-ADA

Store Location: Folder \Ei-ET\DH_ei-wiring-diag\

Store Name 01-3040_335S006ARM1_000_00.dwg

ISO A3

BORDER-A3_013040.dwg / AG0343_013040.dwg / 17.05.2004

FIELD	
INSTRUMENT	JUNCTION BOX

Substation 1

340-NSP-36

MCC : 385CC12B

FEEDER : +25.23

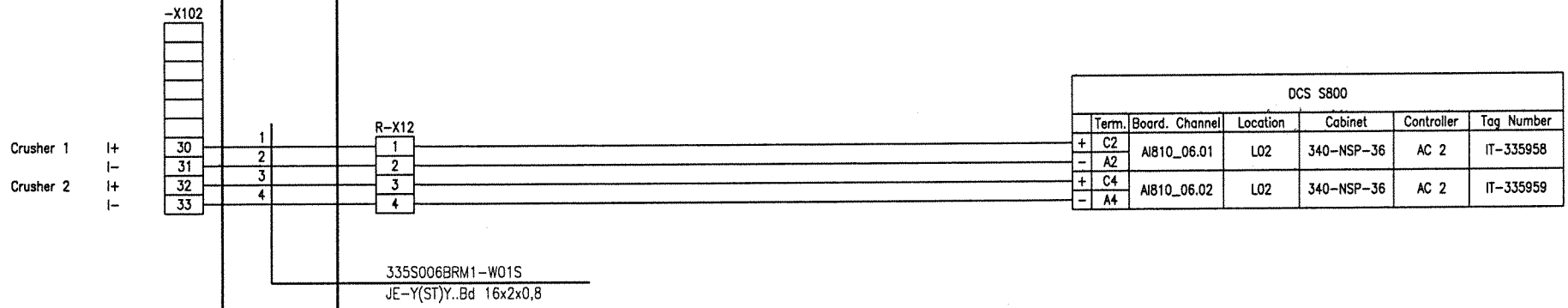

DCS S800

	Term.	Board. Channel	Location	Cabinet	Controller	Tag Number
+	C2	AI810_06.01	L02	340-NSP-36	AC 2	IT-335958
-	A2					
+	C4	AI810_06.02	L02	340-NSP-36	AC 2	IT-335959
-	A4					

Document-ID-BAR-Code

Rev.	Date	Name	Date	Name	Date	Name	Description	Acc. Code
	Drawn/Prepared		Checked		Approved			

Pro. Unit	TON	Cat. Code	Acc. Code	Status
Con. Unit	Type of Document: DH	Order No.	Scale	Tot. Sheets

	Date	Name
Drawn	20.09.2006	Hielscher
Prepared	20.09.2006	Hielscher
Checked	20.09.2006	Heuer
Approved	20.09.2006	Heuer

Code				
UAN	Document ID	Part	Rev.	Group
01-3040	UD-EL-G00-FS-0001		00	

Uhde

All rights reserved © Uhde GmbH

AMMONIA / UREA PROJECT SUEZ II

Designation
Wiring diagram
335S006BRM1

Store Location: Server \\p013040\013040-ADA

Store Location: Folder \Ei-ET\DH_el-wiring-diag\

Store Name 01-3040_335S006BRM1_000_00.dwg

ISO A3

BORDER-A3_013040.dwg / A603A3_013040.dwg / 17.05.2004

CONTENTS

Loop Index (S 800 MOTORS) Processunit 371
Natural Gas Desulphurisation

Tag No.	Rev.	Crossreference: See	Remarks	File No.
371H001-H01	01			
371H001-M01	01			
371H003-H01	01			
371H003-M01	01			

I:\Ej-ET\DH_el-wiring-diag\01-3040_Wiring_diagrams_coversheet_01.doc

FIELD		Substation 1
INSTRUMENT	JUNCTION BOX	340-NSP-36

MCC : 385CC12A

FEEDER : 10.06B

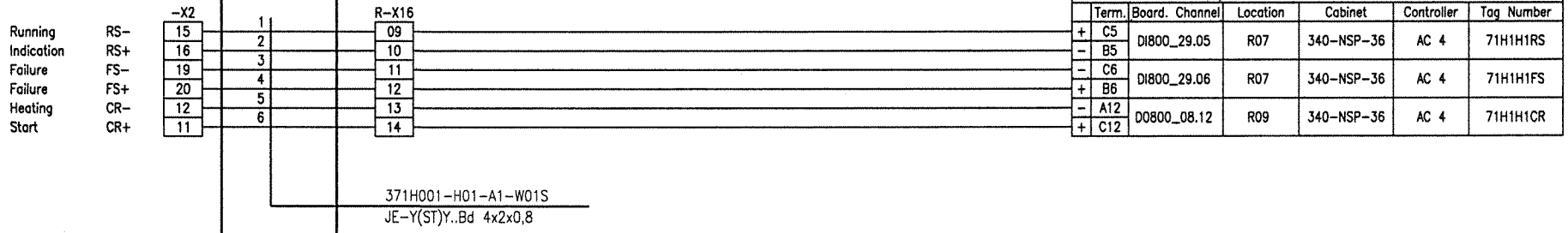

DCS S800						
	Term.	Board. Channel	Location	Cabinet	Controller	Tag Number
+	C5	DI800_29.05	R07	340-NSP-36	AC 4	71H1H1RS
-	B5					
-	C6	DI800_29.06	R07	340-NSP-36	AC 4	71H1H1FS
+	B6					
-	A12	D0800_08.12	R09	340-NSP-36	AC 4	71H1H1CR
+	C12					

Document-ID-BAR-Code

Rev.	Date	Name (Drawn/Prepared)	Date	Name (Checked)	Date	Name (Approved)	Description	Acc. Code
01	20.09.06	Hie Hie	20.09.06	Heuer	20.09.06	Heuer	AS BUILT	

UAN	Document ID	Part	Rev.	Group
01-3040	UD-EL-G00-FS-0001		01	

Code

Uhde

All rights reserved © Uhde GmbH

Pro. Unit	TON	Cat. Code	Acc. Code	Status
Con. Unit	Type of Document: DH	Order No.	Scale	Tot. Sheets

	Date	Name
Drawn	07.03.2005	Hielscher
Prepared	07.03.2005	Hohmann
Checked	07.03.2005	Heuer
Approved	07.03.2005	Heuer

AMMONIA / UREA PROJECT SUEZ II

Designation
Wiring diagram
371H001-H01

Store Location: Server \\p013040\013040-ADA
Store Location: Folder \EI-ET\DH_el-wiring-diag\
Store Name 01-3040_371H001-H01_000_01.dwg

ISO A3

BORDER-A3_013040.dwg / AG03A3_013040.dwg / 17.05.2004

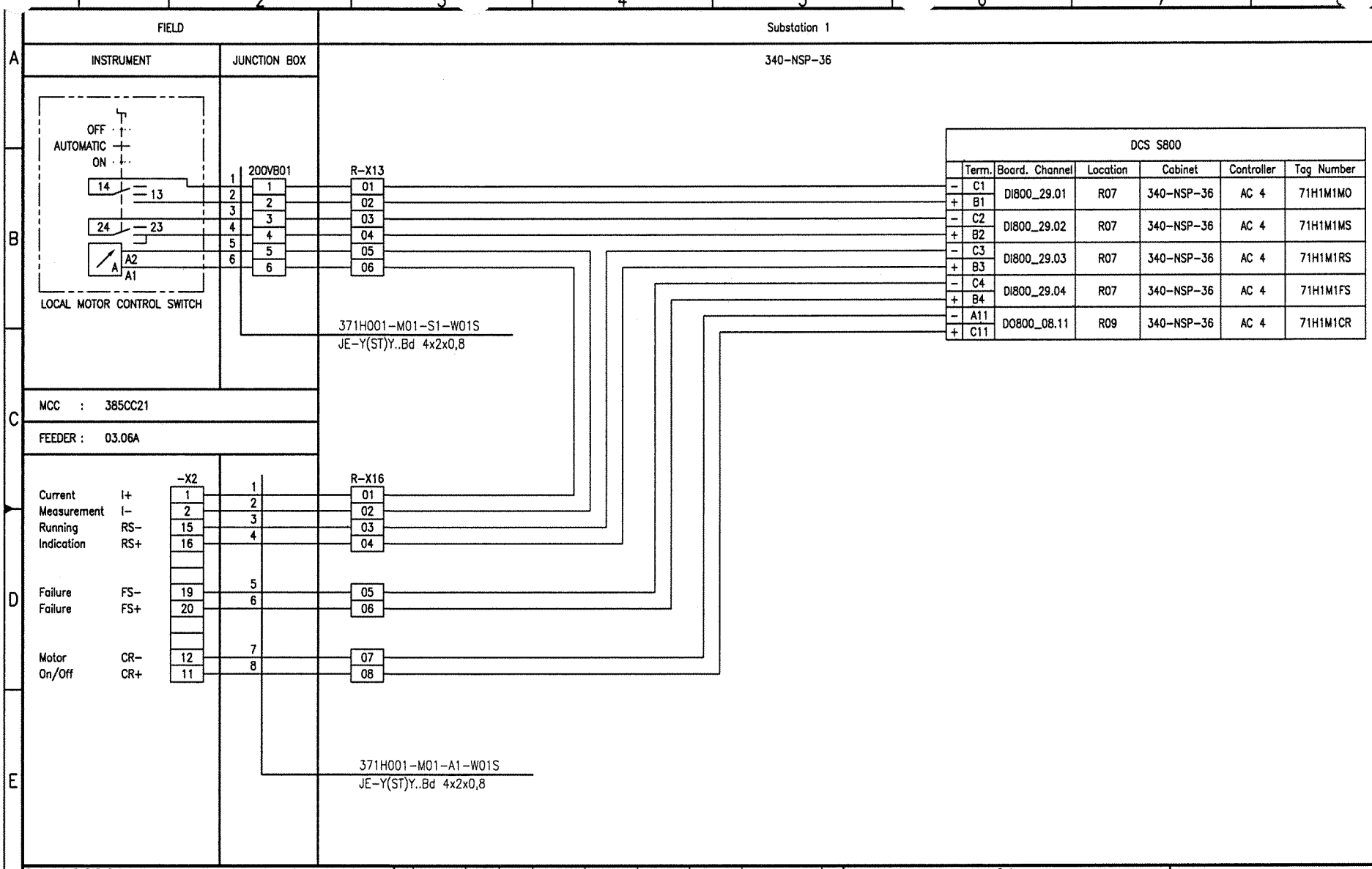

Document-ID-BAR-Code

Rev.	Date	Name (Drawn/Prepared)	Date	Name (Checked)	Date	Name (Approved)	Description	Acc. Code
01	20.09.06	Hie Hie	20.09.06	Heuer	20.09.06	Heuer	AS BUILT	

UAN	Document ID	Part	Rev.	Group
01-3040	UD-EL-G00-FS-0001		01	

Code

Uhde

All rights reserved © Uhde GmbH

Pro. Unit	TON	Cat. Code	Acc. Code	Status
Con. Unit	Type of Document: DH	Order No.	Scale	Tot. Sheets

	Date	Name
Drawn	04.04.2005	Hielscher
Prepared	04.04.2005	Hohmann
Checked	04.04.2005	Heuer
Approved	04.04.2005	Heuer

AMMONIA / UREA PROJECT SUEZ II

Designation
Wiring diagram
371H001-M01

Store Location: Server \\p013040\013040-ADA
Store Location: Folder \EI-ET\DH_el-wiring-diag\
Store Name 01-3040_371H001-M01_000_01.dwg

ISO A3

BORDER-A3_013040.dwg / AG03A3_013040.dwg / 17.05.2004

FIELD		Substation 1
INSTRUMENT	JUNCTION BOX	340-NSP-36

MCC : 385CC12A

FEEDER : 14.06B

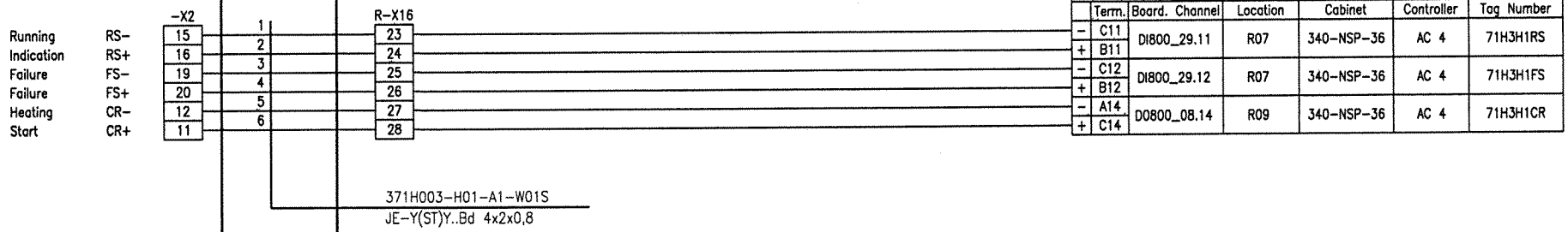

DCS S800						
	Term.	Board. Channel	Location	Cabinet	Controller	Tag Number
-	C11	DI800_29.11	R07	340-NSP-36	AC 4	71H3H1RS
+	B11					
-	C12	DI800_29.12	R07	340-NSP-36	AC 4	71H3H1FS
+	B12					
-	A14	DO800_08.14	R09	340-NSP-36	AC 4	71H3H1CR
+	C14					

Document-ID-BAR-Code

Rev.	Date	Name	Date	Name	Date	Name	Description	Acc. Code
	Drawn/Prepared		Checked		Approved			
01	20.09.06	Hie	20.09.06	Heuer	20.09.06	Heuer	AS BUILT	

UAN	Document ID	Part	Rev.	Group
01-3040	UD-EL-G00-FS-0001		01	

Code

Uhde

All rights reserved © Uhde GmbH

Pro. Unit	TON	Cat. Code	Acc. Code	Status
Con. Unit	Type of Document: DH	Order No.	Scale	Tot. Sheets

	Date	Name
Drawn	07.03.2005	Hielscher
Prepared	07.03.2005	Hohmann
Checked	07.03.2005	Heuer
Approved	07.03.2005	Heuer

AMMONIA / UREA PROJECT SUEZ II

Designation
Wiring diagram
371H003-H01

Store Location: Server \\p013040\013040-ADA

Store Location: Folder \Ei-ET\DH_el-wiring-diag\

Store Name 01-3040_371H003-H01_000_01.dwg

ISO A3

BORDER-A3_013040.dwg / AG03A3_013040.dwg / 17.05.2004

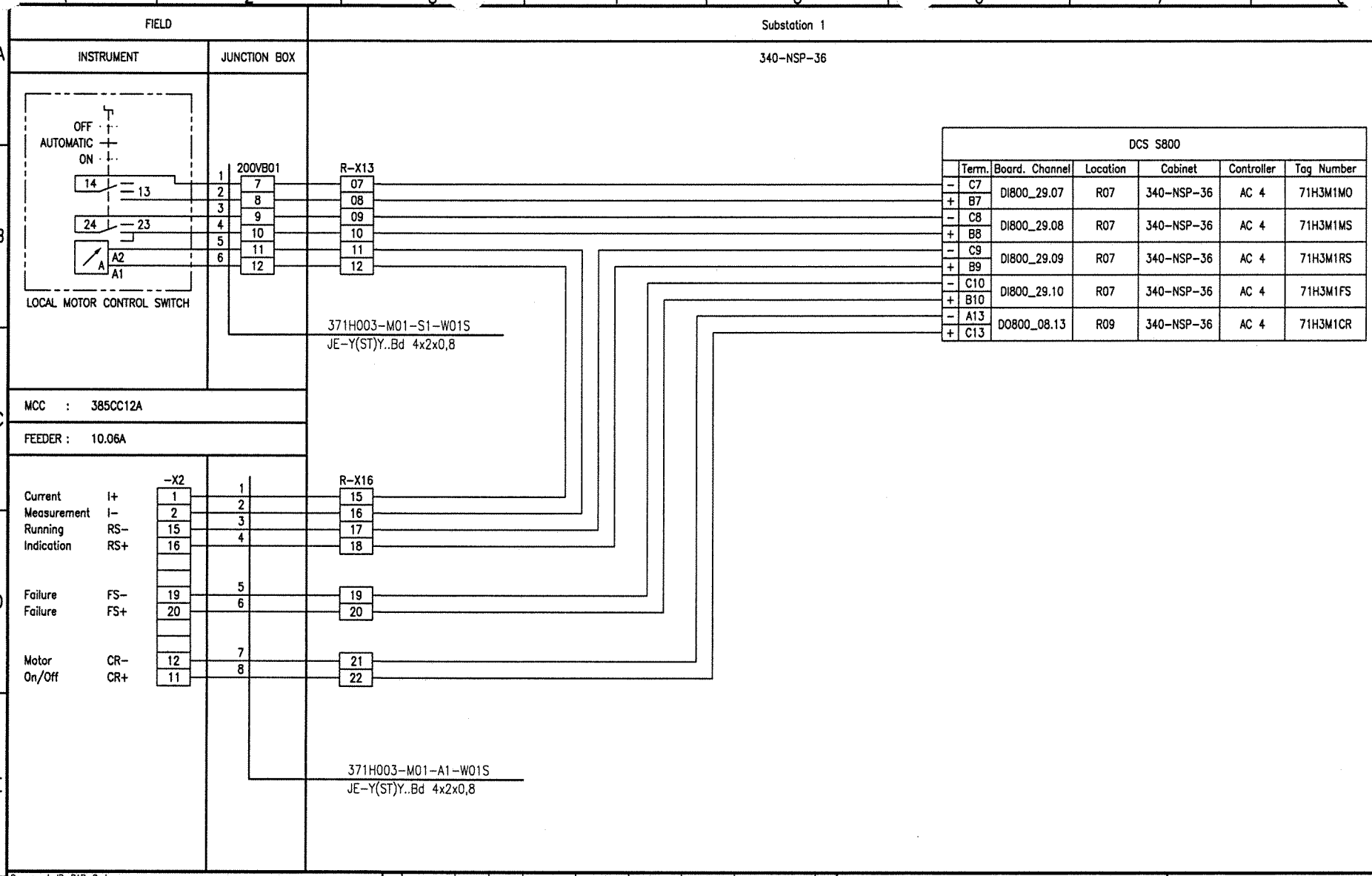

Document-ID-BAR-Code

Rev.	Date	Name (Drawn/Prepared)	Date	Name (Checked)	Date	Name (Approved)	Description	Acc. Code
01	20.09.06	Hie Hie	20.09.06	Heuer	20.09.06	Heuer	AS BUILT	

UAN	Code: Document ID	Part	Rev.	Group
01-3040	UD-EL-G00-FS-0001		01	

Uhde

All rights reserved © Uhde GmbH

Pro. Unit	TON	Cat. Code	Acc. Code	Status
Con. Unit	Type of Document: DH	Order No.	Scale	Tot. Sheets

	Date	Name
Drawn	04.04.2005	Hielscher
Prepared	04.04.2005	Hohmann
Checked	04.04.2005	Heuer
Approved	04.04.2005	Heuer

AMMONIA / UREA PROJECT SUEZ II

Designation: Wiring diagram 371H003-M01

Store Location: Server \\p013040\013040-ADA
Store Location: Folder \Ei-ET\DH_el-wiring-diag\
Store Name 01-3040_371H003-M01_000_01.dwg

ISO A3

BORDER-A3_013040.dwg / AG03A3_013040.dwg / 17.05.2004

CONTENTS

Loop Index (S 800 MOTORS) Processunit 380
Condensate Stripper

Condensate Stripper

Tag No.	Rev.	Crossreference: See	Remarks	File No.
380P001AM01	01			
380P001BM01	01			
380P002AM01	01			
380P002BM01	01			

I:\Ei-ET\DH_el-wiring-diag\01-3040_Wiring_diagrams_coversheet_01.doc

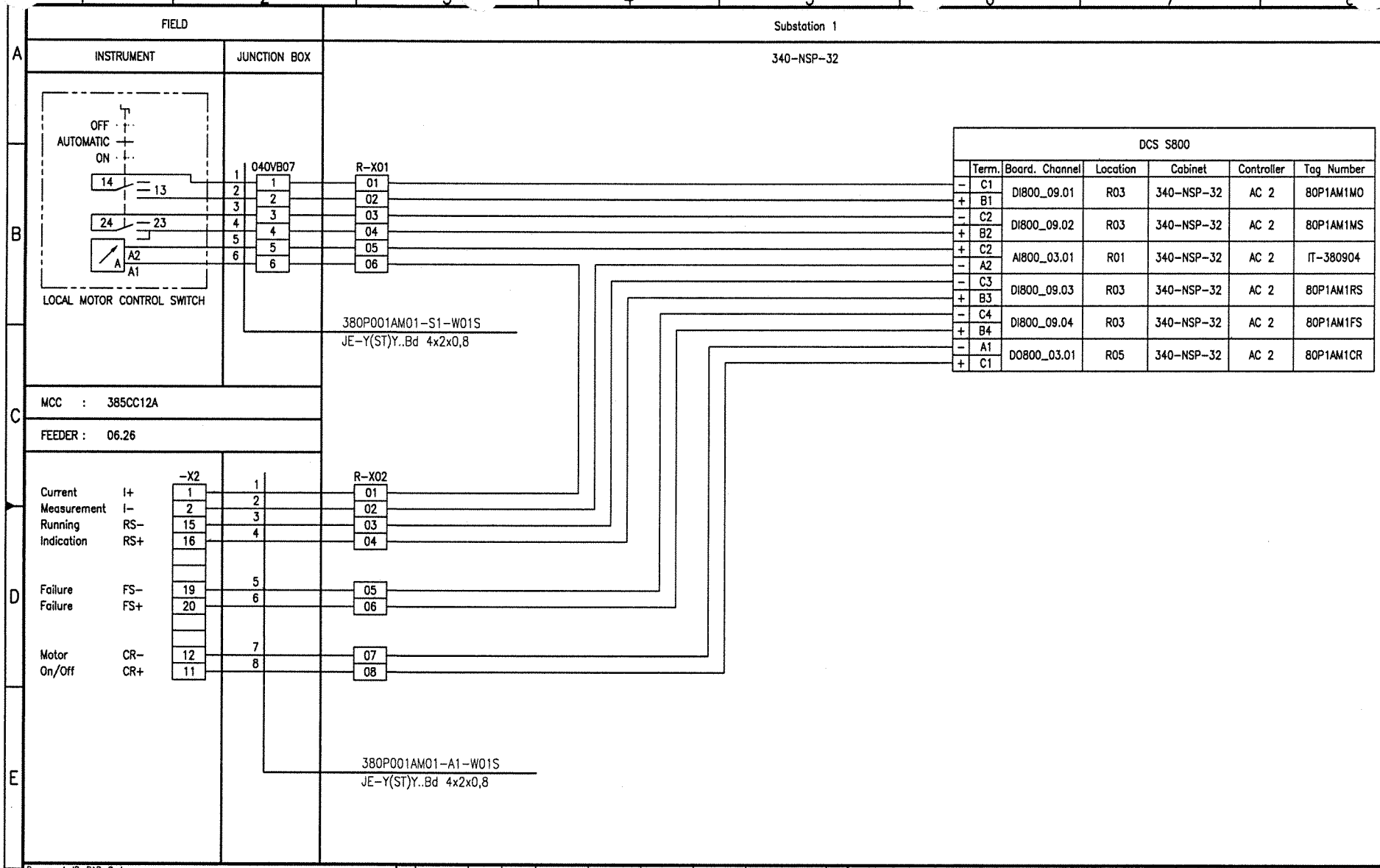

Document-ID-BAR-Code

Rev.	Date	Name (Drawn/Prepared)	Date	Name (Checked)	Date	Name (Approved)	Description	Acc. Code
01	20.09.06	Hie Hie	20.09.06	Heuer	20.09.06	Heuer	AS BUILT	

UAN	Code: Document ID	Part	Rev.	Group
01-3040	UD-EL-G00-FS-0001		01	

Uhde

All rights reserved © Uhde GmbH

Pro. Unit	TON	Cat. Code	Acc. Code	Status
Con. Unit	Type of Document: DH	Order No.	Scale	Tot. Sheets

	Date	Name
Drawn	04.04.2005	Hielscher
Prepared	04.04.2005	Hohmann
Checked	04.04.2005	Heuer
Approved	04.04.2005	Heuer

AMMONIA / UREA PROJECT SUEZ II

Designation: Wiring diagram 380P001AM01

Store Location: Server \\p013040\013040-ADA
Store Location: Folder \EI-ET\DH_el-wiring-diag\
Store Name 01-3040_380P001AM01_000_01.dwg

ISO A3

BORDER-A3_013040.dwg / AG03A3_013040.dwg / 17.05.2004

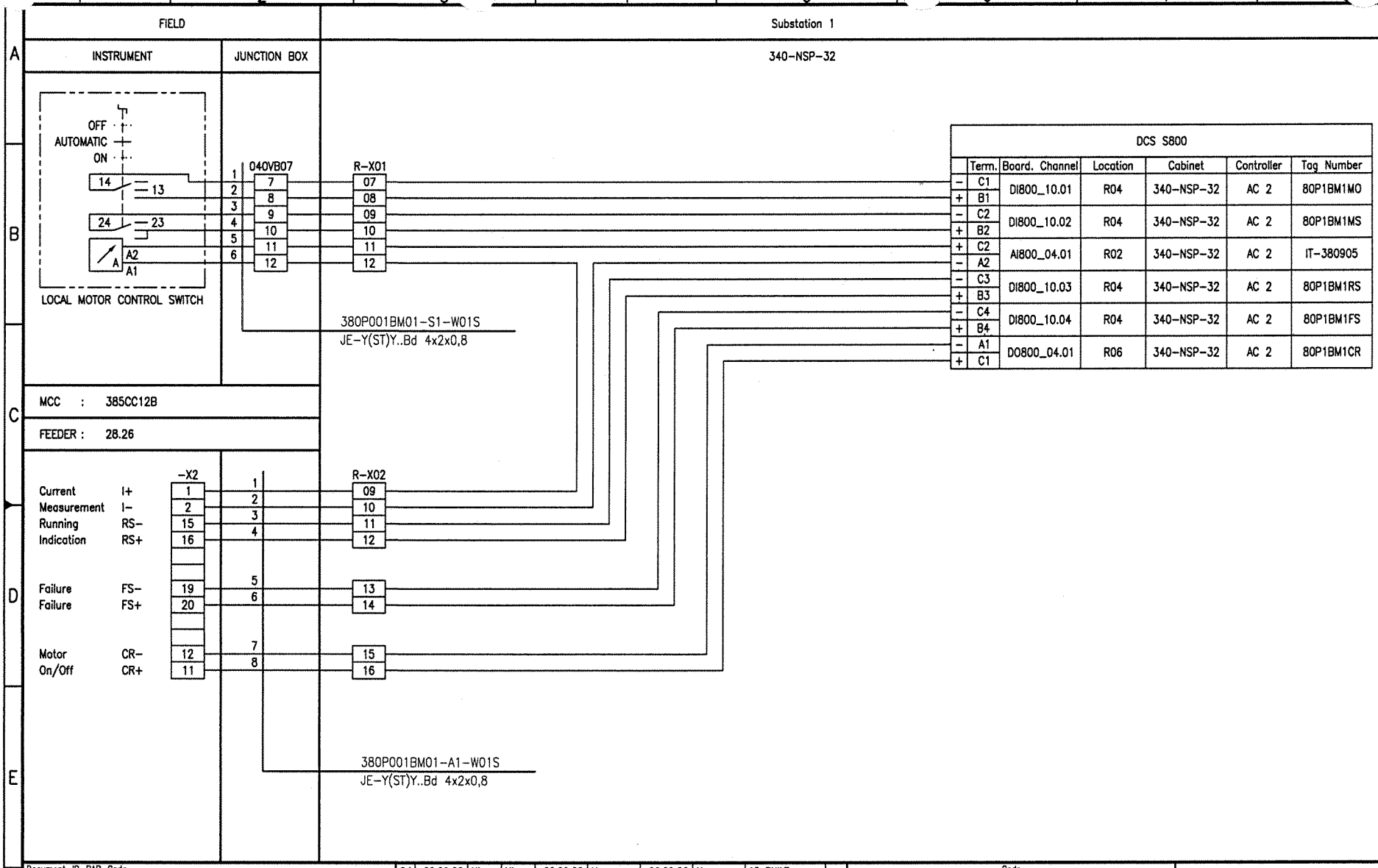

Document-ID-BAR-Code

Rev.	Date	Name (Drawn/Prepared)	Date	Name (Checked)	Date	Name (Approved)	Description	Acc. Code
01	20.09.06	Hie Hie	20.09.06	Heuer	20.09.06	Heuer	AS BUILT	

UAN	Document ID	Part	Rev.	Group
01-3040	UD-EL-G00-FS-0001		01	

Code

Uhde

All rights reserved © Uhde GmbH

Pro. Unit	TON	Cat. Code	Acc. Code	Status
Con. Unit	Type of Document: DH	Order No.	Scale	Tot. Sheets

	Date	Name
Drawn	04.04.2005	Hielscher
Prepared	04.04.2005	Hohmann
Checked	04.04.2005	Heuer
Approved	04.04.2005	Heuer

AMMONIA / UREA PROJECT SUEZ II

Designation
Wiring diagram
380P001BM01

Store Location: Server \\p013040\013040-ADA
Store Location: Folder \EI-ET\DH_el-wiring-diag\
Store Name 01-3040_380P001BM01_000_01.dwg

ISO A3

BORDER-A3_013040.dwg / A013A3_013040.dwg / 17.05.2004

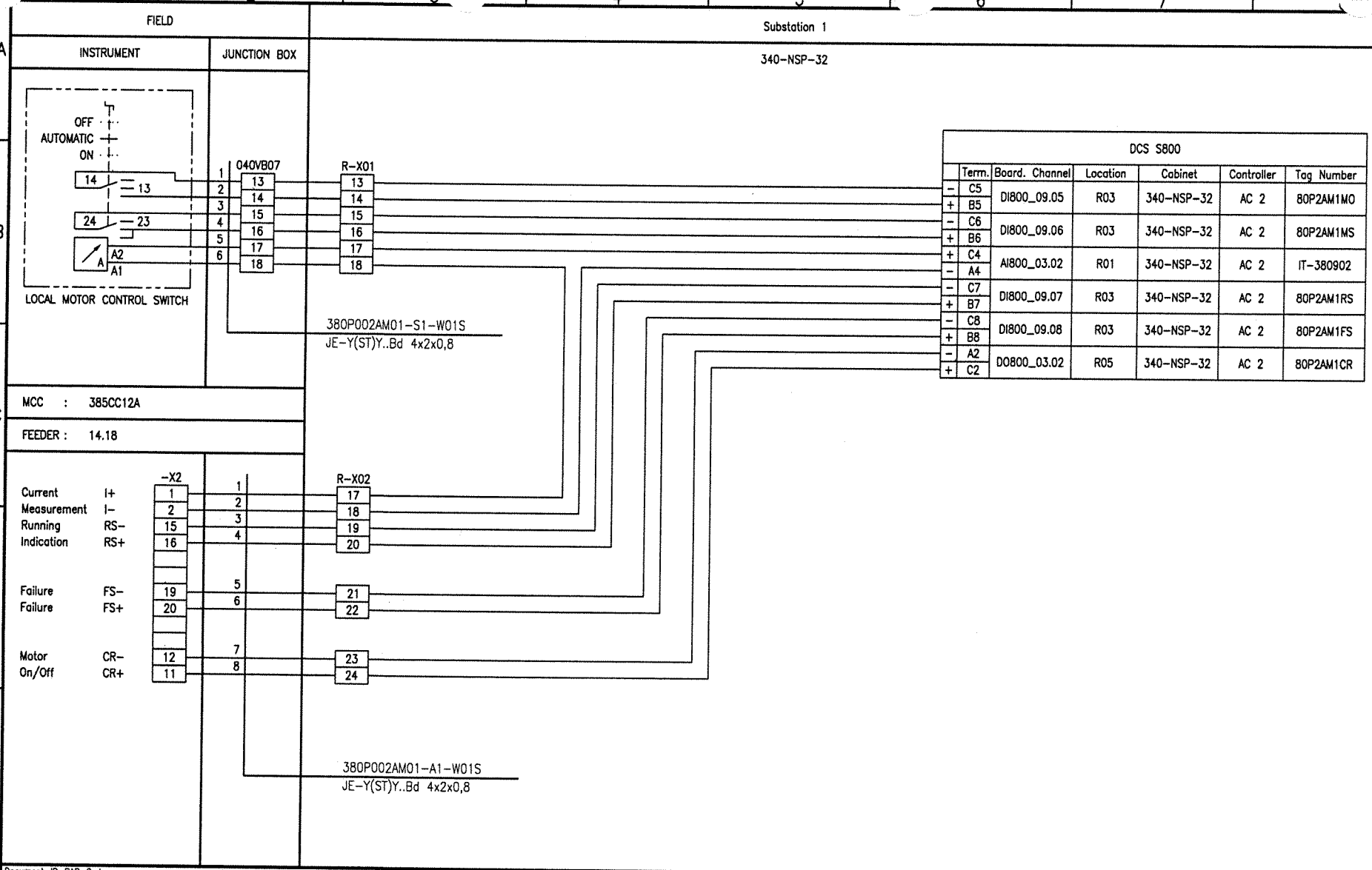

Document-ID-BAR-Code

Rev.	Date	Name (Drawn/Prepared)	Date	Name (Checked)	Date	Name (Approved)	Description	Acc. Code
01	20.09.06	Hie Hie	20.09.06	Heuer	20.09.06	Heuer	AS BUILT	

UAN	Document ID	Part	Rev.	Group
01-3040	UD-EL-G00-FS-0001		01	

Code

Uhde

All rights reserved © Uhde GmbH

Pro. Unit	TON	Cat. Code	Acc. Code	Status
Con. Unit	Type of Document: DH	Order No.	Scale	Tot. Sheets

	Date	Name
Drawn	04.04.2005	Hielscher
Prepared	04.04.2005	Hohmann
Checked	04.04.2005	Heuer
Approved	04.04.2005	Heuer

AMMONIA / UREA PROJECT SUEZ II

Designation
Wiring diagram
380P002AM01

Store Location: Server \\p013040\013040-ADA
Store Location: Folder \Ei-ET\DH_el-wiring-diag\
Store Name 01-3040_380P002AM01_000_01.dwg

ISO A3

BORDER-A3_013040.dwg / AGU3A3_013040.dwg / 17.05.2004

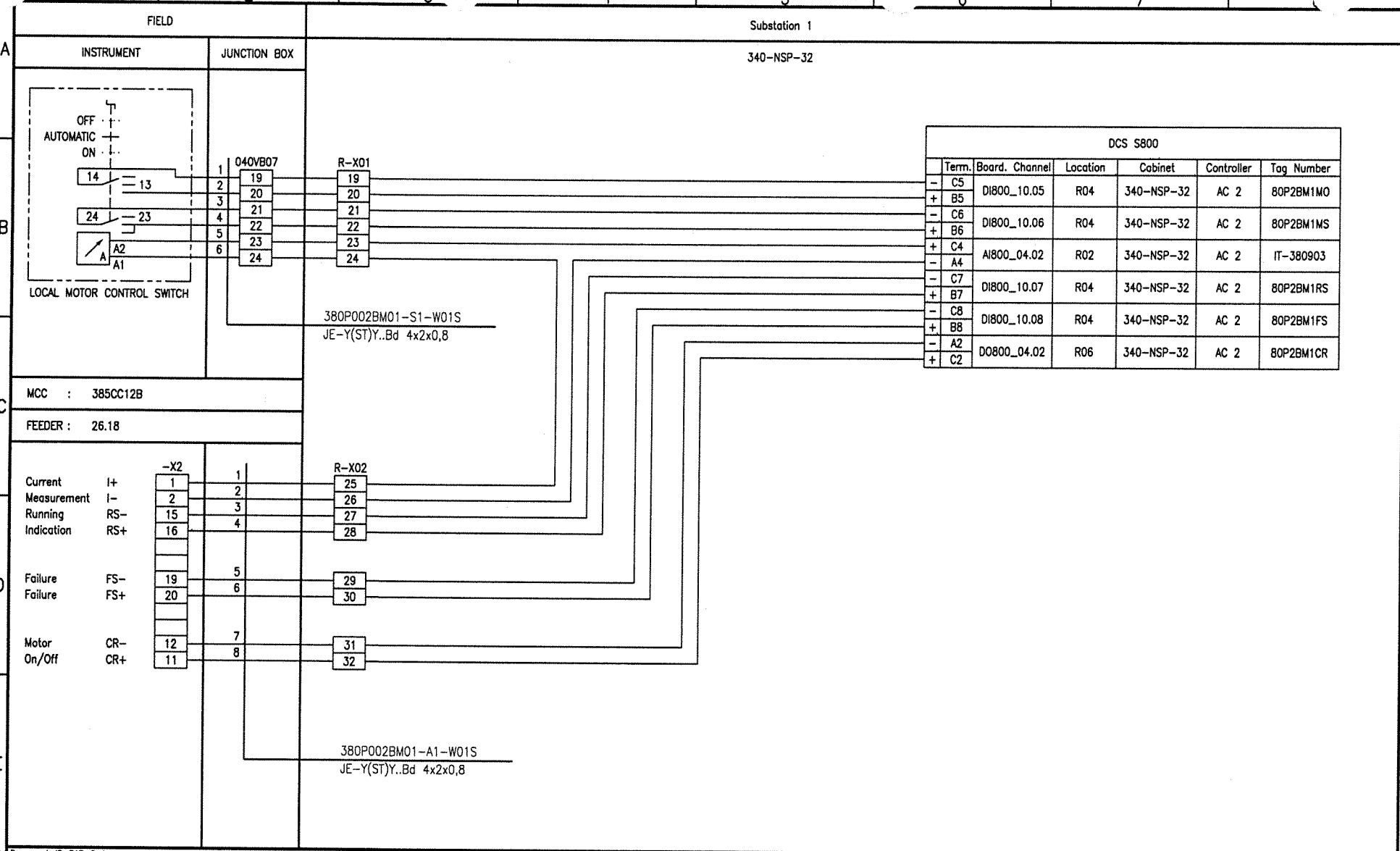

Document-ID-BAR-Code

Rev.	Date	Name (Drawn/Prepared)	Date	Name (Checked)	Date	Name (Approved)	Description	Acc. Code
01	20.09.06	Hie Hie	20.09.06	Heuer	20.09.06	Heuer	AS BUILT	

UAN	Document ID	Part	Rev.	Group
01-3040	UD-EL-G00-FS-0001		01	

Code

Uhde

All rights reserved © Uhde GmbH

Pro. Unit	TON	Cat. Code	Acc. Code	Status
Con. Unit	Type of Document: DH	Order No.	Scale	Tot. Sheets

	Date	Name
Drawn	04.04.2005	Hielscher
Prepared	04.04.2005	Hohmann
Checked	04.04.2005	Heuer
Approved	04.04.2005	Heuer

AMMONIA / UREA PROJECT SUEZ II

Designation
Wiring diagram
380P002BM01

Store Location: Server \\p013040\013040-ADA
Store Location: Folder \EI-ET\DH_el-wiring-diag\
Store Name 01-3040_380P002BM01_000_01.dwg

ISO A3

BORDER-A3_013040.dwg / AG03A3_013040.dwg / 17.05.2004

CONTENTS

Loop Index (S 800 MOTORS) Processunit 381
Ammonia Storage

Tag No.	Rev.	Crossreference: See	Remarks	File No.
381A001-EH1	01			
381A001-M01	01			
381K001AEH1	01			
381K001AM01	01			
381K001BEH1	01			
381K001BM01	01			
381P001AM01	01			
381P001BM01	01			
381T001-RM1	00			

I:\EL-ETDH_el-wiring-diag\01-3040_Wiring_diagrams_coversheet_01.doc

FIELD	
INSTRUMENT	JUNCTION BOX

Substation 1

340-NSP-33

MCC : 385CC11E

FEEDER : 57.06B

		-X2		L-X10
Running	RS-	15	1	09
Indicator	RS+	16	2	10
Failure	FS-	19	3	11
Failure	FS+	20	4	12
Heating	CR-	12	5	13
Start	CR+	11	6	14

381A001-EH1-A1-W01S
JE-Y(ST)Y..Bd 4x2x0,8

DCS S800						
	Term.	Board. Channel	Location	Cabinet	Controller	Tag Number
-	C11	DI800_06.11	R08	340-NSP-33	AC 3	81A1EH1RS
+	B11					
-	C12	DI800_06.12	R08	340-NSP-33	AC 3	81A1EH1FS
+	B12					
-	A11	DO800_01.11	R09	340-NSP-33	AC 3	81A1EH1CR
+	C11					

Document-ID-BAR-Code

Rev.	Date	Name	Date	Name	Date	Name	Description	Acc. Code
01	20.09.06	Hie Hie	20.09.06	Heuer	20.09.06	Heuer	AS BUILT	
	Drawn/Prepared		Checked		Approved			

UAN	Code: Document ID	Part	Rev.	Group
01-3040	UD-EL-G00-FS-0001		01	

Uhde

All rights reserved © Uhde GmbH

Pro. Unit	TON	Cat. Code	Acc. Code	Status

Con. Unit	Type of Document	Order No.	Scale	Tot. Sheets
	DH			

	Date	Name
Drawn	06.04.2005	Hielscher
Prepared	06.04.2005	Hohmann
Checked	06.04.2005	Heuer
Approved	06.04.2005	Heuer

AMMONIA / UREA
PROJECT
SUEZ II

Designation
Wiring diagram
381A001-EH1

Store Location: Server
\\p013040\013040-ADA

Store Location: Folder
\Ei-ET\DH_el-wiring-diag\

Store Name
01-3040_381A001-EH1_000_01.dwg

ISO A3

BORDER-A3_013040.dwg / AG03A3_013040.dwg / 17.05.2004

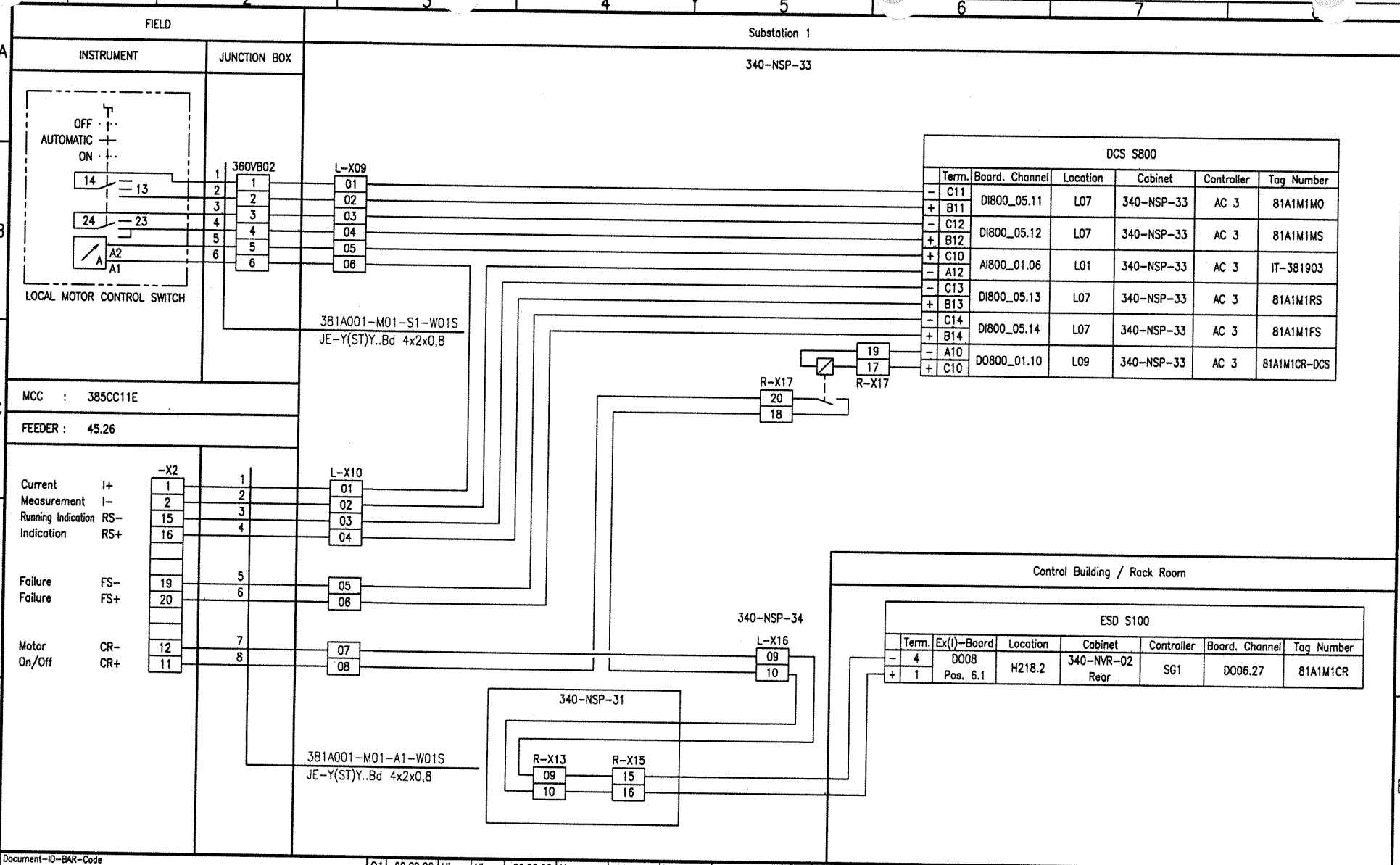
FIELD
INSTRUMENT
JUNCTION BOX
Substation 1
340-NSP-33
OFF
AUTOMATIC
ON
14
13
24
23
A2
A1
LOCAL MOTOR CONTROL SWITCH
360VB02
L-X09
01
02
03
04
05
06
381A001-M01-S1-W01S
JE-Y(ST)Y..Bd 4x2x0,8
DCS S800
Term. | Board. Channel | Location | Cabinet | Controller | Tag Number
C11 / B11 | DI800_05.11 | L07 | 340-NSP-33 | AC 3 | 81A1M1MO
C12 / B12 | DI800_05.12 | L07 | 340-NSP-33 | AC 3 | 81A1M1MS
C10 / A12 | AI800_01.06 | L01 | 340-NSP-33 | AC 3 | IT-381903
C13 / B13 | DI800_05.13 | L07 | 340-NSP-33 | AC 3 | 81A1M1RS
C14 / B14 | DI800_05.14 | L07 | 340-NSP-33 | AC 3 | 81A1M1FS
A10 / C10 | DO800_01.10 | L09 | 340-NSP-33 | AC 3 | 81A1M1CR-DCS
19
17
R-X17
20
18
MCC : 385CC11E
FEEDER : 45.26
-X2
Current Measurement I+ 1
I- 2
Running Indication RS- 15
Indication RS+ 16
Failure FS- 19
Failure FS+ 20
Motor On/Off CR- 12
CR+ 11
L-X10
01
02
03
04
05
06
07
08
Control Building / Rack Room
340-NSP-34
L-X16
09
10
ESD S100
Term. | Ex(I)-Board | Location | Cabinet | Controller | Board. Channel | Tag Number
4 / 1 | DO08 Pos. 6.1 | H218.2 | 340-NVR-02 Rear | SG1 | DO06.27 | 81A1M1CR
340-NSP-31
381A001-M01-A1-W01S
JE-Y(ST)Y..Bd 4x2x0,8
R-X13
09
10
R-X15
15
16
Document-ID-BAR-Code
01 | 20.09.06 | Hie | Hie | 20.09.06 | Heuer | 20.09.06 | Heuer | AS BUILT
Rev. | Date | Name Drawn/Prepared | Date | Name Checked | Date | Name Approved | Description | Acc. Code
UAN 01-3040
Code
Document ID UD-EL-G00-FS-0001
Part
Rev. 01
Group
Uhde
All rights reserved © Uhde GmbH
Pro. Unit | TON | Cat. Code | Acc. Code | Status
Con. Unit | Type of Document DH | Order No. | Scale | Tot. Sheets
Drawn 06.04.2005 Hielscher
Prepared 06.04.2005 Hohmann
Checked 06.04.2005 Heuer
Approved 06.04.2005 Heuer
AMMONIA / UREA PROJECT SUEZ II
Designation
Wiring diagram
381A001-M01
Store Location: Server
\\p013040\013040-ADA
Store Location: Folder
\EI-ET\DH_el-wiring-diag\
Store Name
01-3040_381A001-M01_000_01.dwg
ISO A3
BORDER-A3_013040.dwg / A013A3_013040.dwg / 17.05.2004

FIELD	
INSTRUMENT	JUNCTION BOX

Substation 1

340-NSP-33

MCC : 385CC31

FEEDER : 12.06A

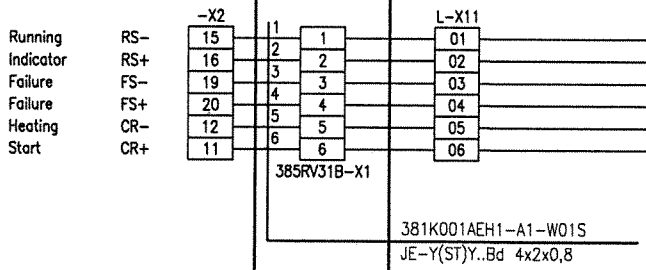

DCS S800						
	Term.	Board. Channel	Location	Cabinet	Controller	Tag Number
-	C9	DI800_05.09	L07	340-NSP-33	AC 3	81K1AEH1RS
+	B9					
-	C10	DI800_05.10	L07	340-NSP-33	AC 3	81K1AEH1FS
+	B10					
-	A9	DO800_01.09	L09	340-NSP-33	AC 3	81K1AEH1CR
+	C9					

Document-ID-BAR-Code

Rev.	Date	Name	Date	Name	Date	Name	Description	Acc. Code
01	20.09.06	Hie	20.09.06	Heuer	20.09.06	Heuer	AS BUILT	
	Drawn/Prepared		Checked		Approved			

UAN	Code: Document ID	Part	Rev.	Group
01-3040	UD-EL-G00-FS-0001		01	

Uhde

All rights reserved © Uhde GmbH

Pro. Unit	TON	Cat. Code	Acc. Code	Status

Con. Unit	Type of Document	Order No.	Scale	Tot. Sheets
	DH			

	Date	Name
Drawn	06.04.2005	Hielscher
Prepared	06.04.2005	Hohmann
Checked	06.04.2005	Heuer
Approved	06.04.2005	Heuer

AMMONIA / UREA
PROJECT
SUEZ II

Designation
Wiring diagram
381K001AEH1

Store Location: Server
\\p013040\013040-ADA

Store Location: Folder
\EI-ET\DH_el-wiring-diag\

Store Name
01-3040_381K001AEH1_000_01.dwg

ISO A3

BORDER-A3_013040.dwg / AG03A3_013040.dwg / 17.05.2004

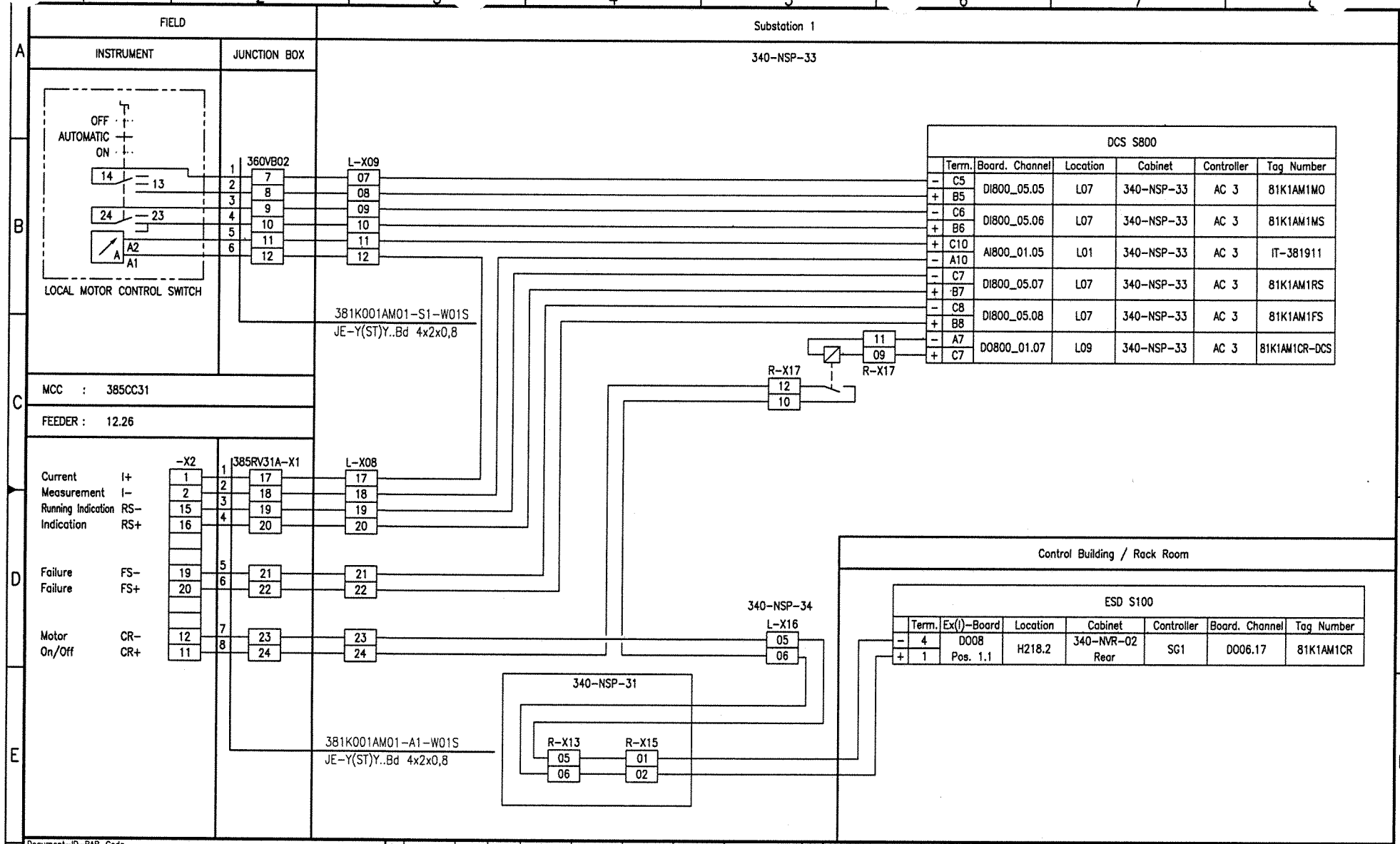
FIELD
Substation 1
INSTRUMENT
JUNCTION BOX
340-NSP-33
OFF
AUTOMATIC
ON
14
13
24
23
A2
A1
LOCAL MOTOR CONTROL SWITCH
360VB02
L-X09
381K001AM01-S1-W01S
JE-Y(ST)Y..Bd 4x2x0,8
MCC : 385CC31
FEEDER : 12.26
-X2
385RV31A-X1
L-X08
Current Measurement I+ I-
Running Indication RS-
Indication RS+
Failure FS-
Failure FS+
Motor On/Off CR- CR+
381K001AM01-A1-W01S
JE-Y(ST)Y..Bd 4x2x0,8
R-X17
340-NSP-34
L-X16
340-NSP-31
R-X13
R-X15
DCS S800
Term. Board. Channel Location Cabinet Controller Tag Number
C5 B5 DI800_05.05 L07 340-NSP-33 AC 3 81K1AM1MO
C6 B6 DI800_05.06 L07 340-NSP-33 AC 3 81K1AM1MS
C10 A10 AI800_01.05 L01 340-NSP-33 AC 3 IT-381911
C7 B7 DI800_05.07 L07 340-NSP-33 AC 3 81K1AM1RS
C8 B8 DI800_05.08 L07 340-NSP-33 AC 3 81K1AM1FS
A7 C7 DO800_01.07 L09 340-NSP-33 AC 3 81K1AM1CR-DCS
Control Building / Rack Room
ESD S100
Term. Ex(i)-Board Location Cabinet Controller Board. Channel Tag Number
4 1 DO08 Pos. 1.1 H218.2 340-NVR-02 Rear SG1 DO06.17 81K1AM1CR
Document-ID-BAR-Code
01 20.09.06 Hie Hie 20.09.06 Heuer 20.09.06 Heuer AS BUILT
Rev. Date Name Drawn/Prepared Date Name Checked Date Name Approved Description Acc. Code
UAN 01-3040
Code Document ID UD-EL-G00-FS-0001 Part Rev. 01 Group
Uhde
All rights reserved © Uhde GmbH
Pro. Unit TON Cat. Code Acc. Code Status
Con. Unit Type of Document DH Order No. Scale Tot. Sheets
Drawn 06.04.2005 Hielscher
Prepared 06.04.2005 Hohmann
Checked 06.04.2005 Heuer
Approved 06.04.2005 Heuer
AMMONIA / UREA PROJECT SUEZ II
Designation
Wiring diagram 381K001AM01
Store Location: Server \\p013040\013040-ADA
Store Location: Folder \Ei-ET\DH_el-wiring-diag\
Store Name 01-3040_381K001AM01_000_01.dwg
ISO A3
BORDER-A3_013040.dwg / AG03A3_013040.dwg / 17.05.2004

FIELD	
INSTRUMENT	JUNCTION BOX

Substation 1

340-NSP-33

MCC : 385CC31

FEEDER : 10.06D

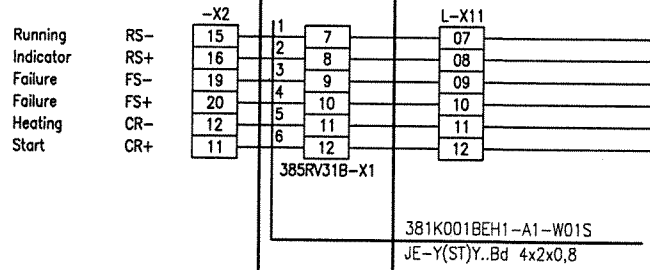

DCS S800

	Term.	Board. Channel	Location	Cabinet	Controller	Tag Number
-	C9	DI800_06.09	L08	340-NSP-33	AC 3	81K1BEH1RS
+	B9					
-	C10	DI800_06.10	L08	340-NSP-33	AC 3	81K1BEH1FS
+	B10					
-	A9	DO800_02.09	L10	340-NSP-33	AC 3	81K1BEH1CR
+	C9					

Document-ID-BAR-Code

Rev.	Date	Name	Date	Name	Date	Name	Description	Acc. Code
01	20.09.06	Hie Hie	20.09.06	Heuer	20.09.06	Heuer	AS BUILT	
	Drawn/Prepared		Checked		Approved			

UAN	Code: Document ID	Part	Rev.	Group
01-3040	UD-EL-G00-FS-0001		01	

Uhde

All rights reserved © Uhde GmbH

Pro. Unit	TON	Cat. Code	Acc. Code	Status

Con. Unit	Type of Document	Order No.	Scale	Tot. Sheets
	DH			

	Date	Name
Drawn	06.04.2005	Hielscher
Prepared	06.04.2005	Hohmann
Checked	06.04.2005	Heuer
Approved	06.04.2005	Heuer

AMMONIA / UREA
PROJECT
SUEZ II

Designation
Wiring diagram
381K001BEH1

Store Location: Server
\\p013040\013040-ADA

Store Location: Folder
\Ei-ET\DH_el-wiring-diag\

Store Name
01-3040_381K001BEH1_000_01.dwg

ISO A3

BORDER-A3_013040.dwg / AG13A3_013040.dwg / 17.05.2004

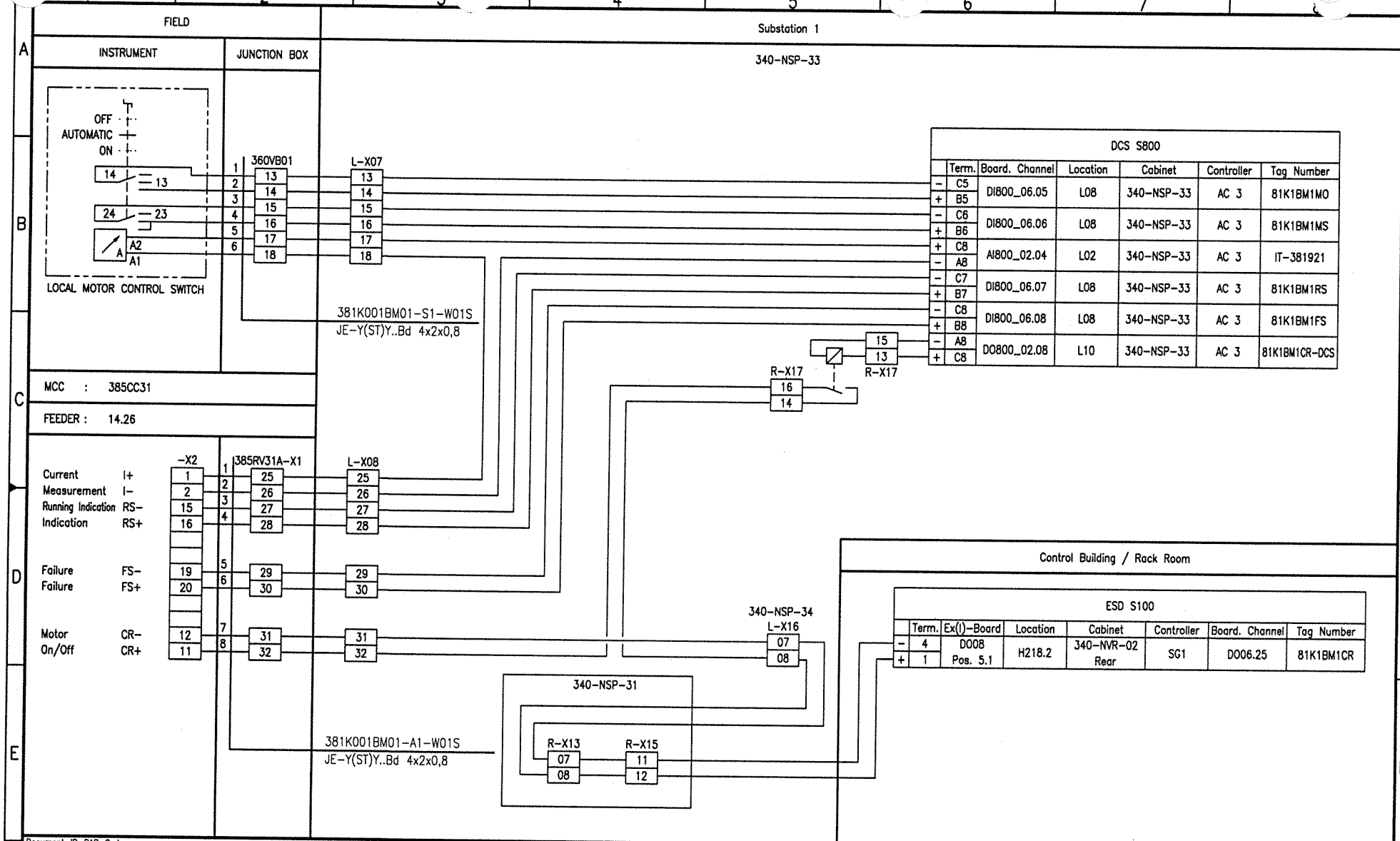

DCS S800						
	Term.	Board. Channel	Location	Cabinet	Controller	Tag Number
-	C5	DI800_06.05	L08	340-NSP-33	AC 3	81K1BM1MO
+	B5					
-	C6	DI800_06.06	L08	340-NSP-33	AC 3	81K1BM1MS
+	B6					
+	C8	AI800_02.04	L02	340-NSP-33	AC 3	IT-381921
-	A8					
-	C7	DI800_06.07	L08	340-NSP-33	AC 3	81K1BM1RS
+	B7					
-	C8	DI800_06.08	L08	340-NSP-33	AC 3	81K1BM1FS
+	B8					
-	A8	DO800_02.08	L10	340-NSP-33	AC 3	81K1BM1CR-DCS
+	C8					

ESD S100							
	Term.	Ex(i)-Board	Location	Cabinet	Controller	Board. Channel	Tag Number
-	4	DO08 Pos. 5.1	H218.2	340-NVR-02 Rear	SG1	DO06.25	81K1BM1CR
+	1						

Document-ID-BAR-Code

Rev.	Date	Name	Date	Name	Date	Name	Description	Acc. Code
01	20.09.06	Hie Hie	20.09.06	Heuer	20.09.06	Heuer	AS BUILT	
	Drawn/Prepared		Checked		Approved			

Pro. Unit	TON	Cat. Code	Acc. Code	Status
Con. Unit	Type of Document: DH	Order No.	Scale	Tot. Sheets

	Date	Name
Drawn	06.04.2005	Hielscher
Prepared	06.04.2005	Hohmann
Checked	06.04.2005	Heuer
Approved	06.04.2005	Heuer

Store Location: Server \\p013040\013040-ADA
Store Location: Folder \EI-ET\DH_el-wiring-diag\
Store Name 01-3040_381K001BM01_000_01.dwg

UAN 01-3040
Code: Document ID UD-EL-G00-FS-0001 | Part | Rev. 01 | Group

Uhde

All rights reserved © Uhde GmbH

AMMONIA / UREA PROJECT SUEZ II

Designation
Wiring diagram
381K001BM01

ISO A3

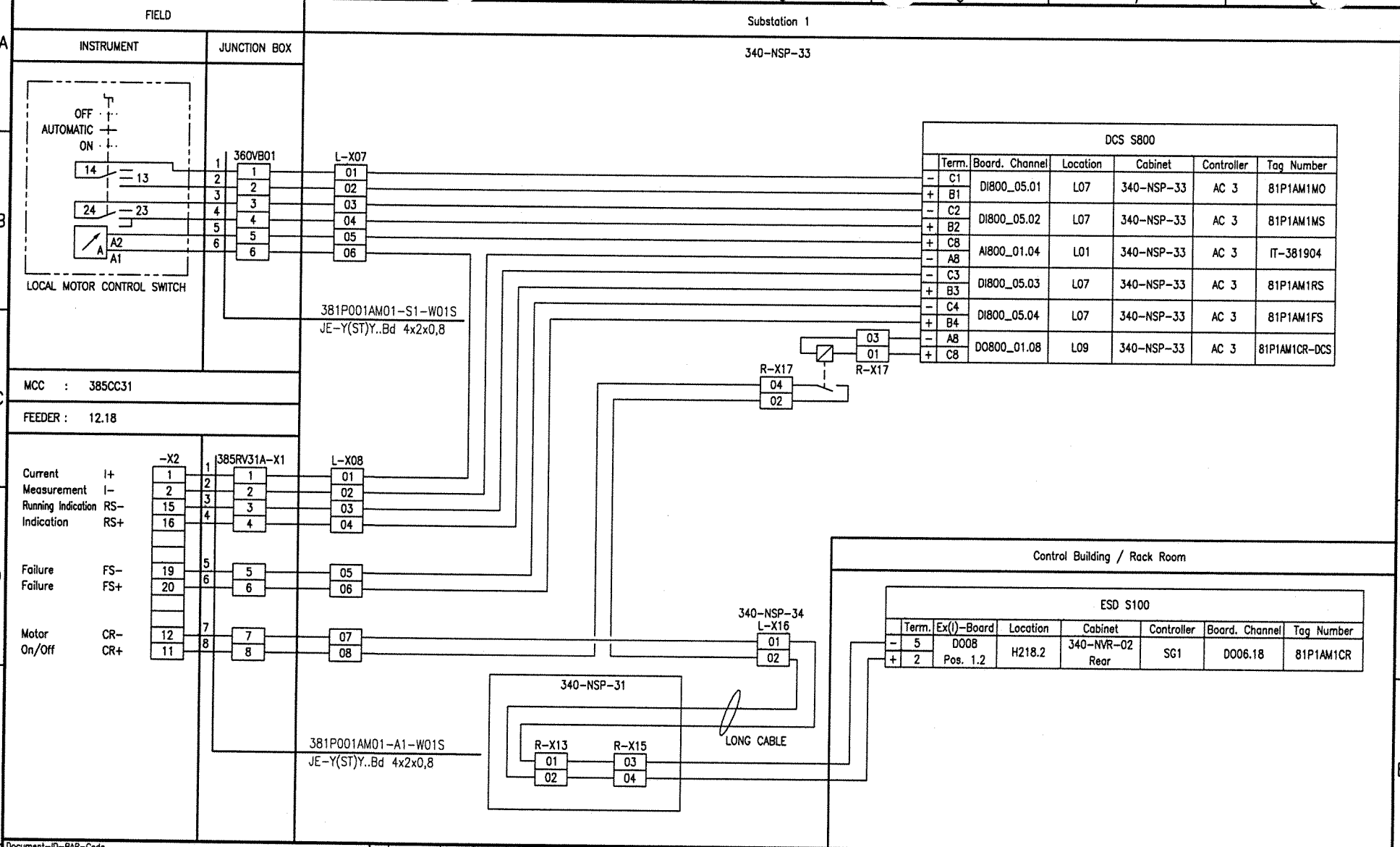

Document-ID-BAR-Code

Rev.	Date	Drawn/Prepared		Date	Checked	Date	Approved	Description	Acc. Code
01	20.09.06	Hie	Hie	20.09.06	Heuer	20.09.06	Heuer	AS BUILT	

UAN	Code: Document ID	Part	Rev.	Group
01-3040	UD-EL-G00-FS-0001		01	

Uhde

All rights reserved © Uhde GmbH

Pro. Unit	TON	Cat. Code	Acc. Code	Status
Con. Unit	Type of Document: DH	Order No.	Scale	Tot. Sheets

	Date	Name
Drawn	06.04.2005	Hielscher
Prepared	06.04.2005	Hohmann
Checked	06.04.2005	Heuer
Approved	06.04.2005	Heuer

AMMONIA / UREA PROJECT SUEZ II

Designation
Wiring diagram
381P001AM01

Store Location: Server \\p013040\013040-ADA
Store Location: Folder \EI-ET\DH_el-wiring-diag\
Store Name 01-3040_381P001AM01_000_01.dwg

ISO A3

BORDER-A3_013040.dwg / AG03A3_013040.dwg / 17.05.2004

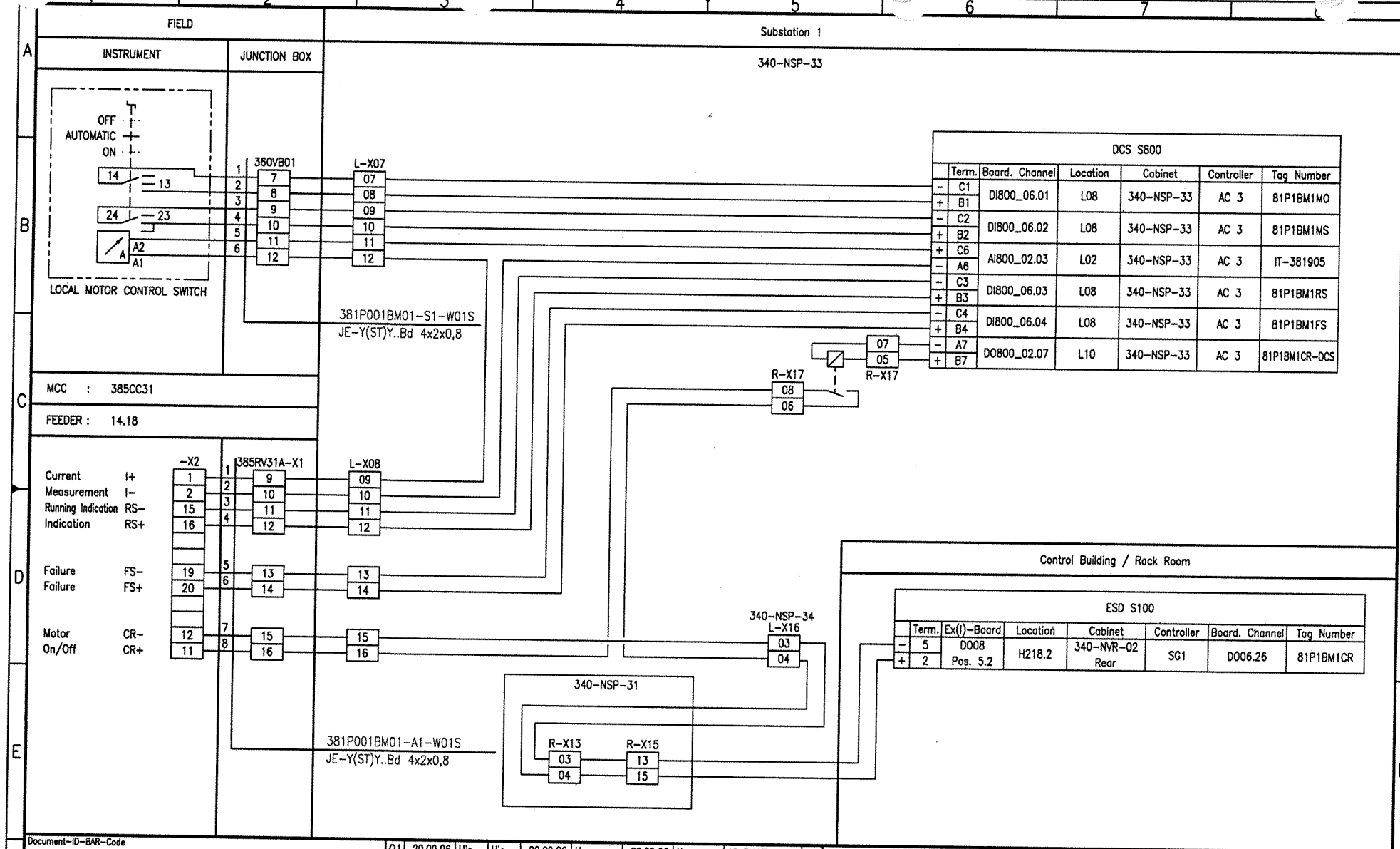
FIELD
INSTRUMENT
JUNCTION BOX
Substation 1
340-NSP-33
OFF
AUTOMATIC
ON
14
13
24
23
A2
A1
LOCAL MOTOR CONTROL SWITCH
360VB01
L-X07
381P001BM01-S1-W01S
JE-Y(ST)Y..Bd 4x2x0,8
DCS S800
Term. Board. Channel Location Cabinet Controller Tag Number
C1 DI800_06.01 L08 340-NSP-33 AC 3 81P1BM1MO
B1
C2 DI800_06.02 L08 340-NSP-33 AC 3 81P1BM1MS
B2
C6 AI800_02.03 L02 340-NSP-33 AC 3 IT-381905
A6
C3 DI800_06.03 L08 340-NSP-33 AC 3 81P1BM1RS
B3
C4 DI800_06.04 L08 340-NSP-33 AC 3 81P1BM1FS
B4
A7 DO800_02.07 L10 340-NSP-33 AC 3 81P1BM1CR-DCS
B7
R-X17
MCC : 385CC31
FEEDER : 14.18
-X2
385RV31A-X1
L-X08
Current Measurement I+ I-
Running Indication RS-
Indication RS+
Failure FS-
Failure FS+
Motor On/Off CR- CR+
Control Building / Rack Room
ESD S100
Term. Ex(i)-Board Location Cabinet Controller Board. Channel Tag Number
5 D008 Pos. 5.2 H218.2 340-NVR-02 Rear SG1 D006.26 81P1BM1CR
2
340-NSP-34
L-X16
340-NSP-31
R-X13
R-X15
381P001BM01-A1-W01S
JE-Y(ST)Y..Bd 4x2x0,8
Document-ID-BAR-Code
01 20.09.06 Hie Hie 20.09.06 Heuer 20.09.06 Heuer AS BUILT
Rev. Date Name Drawn/Prepared Date Name Checked Date Name Approved Description Acc. Code
UAN 01-3040
Document ID UD-EL-G00-FS-0001
Part Rev. 01 Group
Uhde
All rights reserved © Uhde GmbH
Pro. Unit TON Cat. Code Acc. Code Status
Con. Unit Type of Document DH Order No. Scale Tot. Sheets
Drawn 06.04.2005 Hielscher
Prepared 06.04.2005 Hohmann
Checked 06.04.2005 Heuer
Approved 06.04.2005 Heuer
AMMONIA / UREA PROJECT SUEZ II
Designation
Wiring diagram 381P001BM01
Store Location: Server \\p013040\013040-ADA
Store Location: Folder \Ei-ET\DH_el-wiring-diag\
Store Name 01-3040_381P001BM01_000_01.dwg
ISO A3
BORDER-A3_013040.dwg / A03A3_013040.dwg / 17.05.2004

FIELD	
INSTRUMENT	JUNCTION BOX

Substation 1

340-NSP-36

MCC : 385CC11E

FEEDER : +61.19

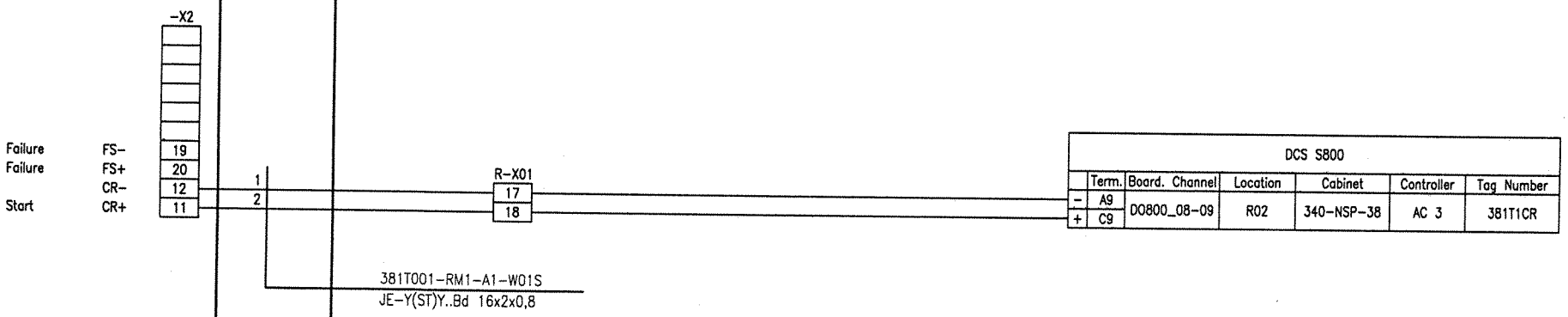

DCS S800

	Term.	Board. Channel	Location	Cabinet	Controller	Tag Number
-	A9	DO800_08-09	R02	340-NSP-38	AC 3	381T1CR
+	C9					

Document-ID-BAR-Code

Rev.	Date	Name	Date	Name	Date	Name	Description	Acc. Code
		Drawn/Prepared		Checked		Approved		

UAN	Document ID	Part	Rev.	Group
01-3040	UD-EL-G00-FS-0001		00	

Code

Uhde

All rights reserved © Uhde GmbH

Pro. Unit	TON	Cat. Code	Acc. Code	Status
Con. Unit	Type of Document: DH	Order No.	Scale	Tot. Sheets

	Date	Name
Drawn	20.09.2006	Hielscher
Prepared	20.09.2006	Hielscher
Checked	20.09.2006	Heuer
Approved	20.09.2006	Heuer

AMMONIA / UREA PROJECT SUEZ II

Designation
Wiring diagram
381T001-RM1

Store Location: Server
\\p013040\013040-ADA

Store Location: Folder
\EI-ET\DH_el-wiring-diag\

Store Name
01-3040_381T001-RM1_000_00.dwg

ISO A3

BORDER-A3_013040.dwg / A03A3_013040.dwg / 17.05.2004

CONTENTS

Loop Index (S 800 MOTORS) Processunit 382
Deareator & BFW Pumps

Tag No.	Rev.	Crossreference: See	Remarks	File No.
382P001BM01	01			
382U001-EH1	01			
382U001-M01	01			
382U001-M02	01			
382U002-M01	01			
382U002-M02	01			
382U002-M03	01			
382U003-EH1	01			
382U003-M01	01			
382U004-M01	01			
382U004-M02	01			

I:\D-ET\DH_el-wiring-diag\01-3040_Wiring_diagrams_coversheet_01.doc

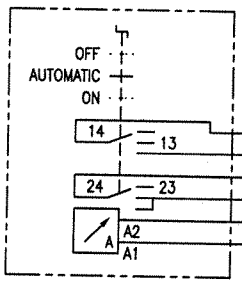

FIELD

INSTRUMENT | JUNCTION BOX

LOCAL MOTOR CONTROL SWITCH

040VB01

R-X01

382P001BM01-S1-W01S
JE-Y(ST)Y..Bd 4x2x0,8

MCC : 385CB11

FEEDER : 19

		-X09
Current	I+	1
Measurement	I-	2
Running Indication	RS2-	3
Space Heater	RS2+	4
Motor	CR1-	6
On	CR1+	5
Motor	CR2-	8
Off	CR2+	7
Running Indication	RS1-	9
Motor	RS1+	10
Failure	FS-	11
Failure	FS+	13
Power	P+	15
Measurement	P-	16

R-X02

382P001BM01-A1-W01S
JE-Y(ST)Y..Bd 12x2x0,8

Substation 1

340-NSP-33

DCS S800

	Term.	Board. Channel	Location	Cabinet	Controller	Tag Number
-	C1	DI800_07.01	R02	340-NSP-33	AC 3	82P1BM1MO
+	B1					
-	C2	DI800_07.02	R02	340-NSP-33	AC 3	82P1BM1MS
+	B2					
+	C2	AI800_03.01	R01	340-NSP-33	AC 3	IT-382903
-	A2					
-	C3	DI800_07.03	R02	340-NSP-33	AC 3	82P1BM1SHRS
+	B3					
-	A6	DO800_03.06	R09	340-NSP-33	AC 3	82P1BM1CR1
+	C6					
-	A7	DO800_03.07	R09	340-NSP-33	AC 3	82P1BM1CR2
+	C7					
-	C4	DI800_07.04	R02	340-NSP-33	AC 3	82P1BM1RS
+	B4					
-	C5	DI800_07.05	R02	340-NSP-33	AC 3	82P1BM1FS
+	B5					

340-NSP-34
R-X14

X320

Control Building / Rack Room

DCS S100

	Term.	Board. Channel	Location	Cabinet	Controller	Tag Number
-	31	PU02.01	+H331.2	340-NSP-11 Rear	AC 3	82P1BM1PI

BORDER-A3_013040.dwg / A03A3_013040.dwg / 17.05.2004

Document-ID-BAR-Code

Rev.	Date	Name	Date	Name	Date	Name	Description	Acc. Code
01	20.09.06	Hie	20.09.06	Heuer	20.09.06	Heuer	AS BUILT	
	Drawn/Prepared		Checked		Approved			

UAN	Code: Document ID	Part	Rev.	Group
01-3040	UD-EL-G00-FS-0001		01	

Uhde

All rights reserved © Uhde GmbH

Pro. Unit	TON	Cat. Code	Acc. Code	Status
Con. Unit	Type of Document: DH	Order No.	Scale	Tot. Sheets

	Date	Name
Drawn	07.04.2005	Hielscher
Prepared	07.04.2005	Hohmann
Checked	07.04.2005	Heuer
Approved	07.04.2005	Heuer

AMMONIA / UREA PROJECT SUEZ II

Designation: Wiring diagram 382P001BM01

Store Location: Server \\p013040\013040-ADA

Store Location: Folder \EI-ET\DH_el-wiring-diag\

Store Name: 01-3040_382P001BM01_000_01.dwg

ISO A3

FIELD

INSTRUMENT | JUNCTION BOX

Substation 1

340-NSP-33

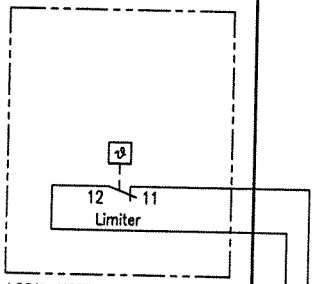

MCC : 385CC11E

FEEDER : 57.06A

-X2

Limiter	LI	4
Limiter	LI	3
Failure	FS-	19
Failure	FS+	20
Heating	CR-	12
Start	CR+	11

1 2 3 4

R-X02: 23 24 25 26

382U001-EH1-A1-W01S
JE-Y(ST)Y..Bd 12x2x0,8

DCS S800

	Term.	Board. Channel	Location	Cabinet	Controller	Tag Number
-	C14	DI800_07.14	R02	340-NSP-33	AC 3	82U1EH1FS
+	B14					
-	A2	DO800_03.02	R09	340-NSP-33	AC 3	82U1EH1CR
+	C2					

Document-ID-BAR-Code

Rev.	Date	Name	Drawn/Prepared	Date	Name	Checked	Date	Name	Approved	Description	Acc. Code
01	20.09.06	Hie	Hie	20.09.06	Heuer		20.09.06	Heuer		AS BUILT	

UAN	Code: Document ID	Part	Rev.	Group
01-3040	UD-EL-G00-FS-0001		01	

Uhde

All rights reserved © Uhde GmbH

Pro. Unit	TON	Cat. Code	Acc. Code	Status
Con. Unit	Type of Document: DH	Order No.	Scale	Tot. Sheets

	Date	Name
Drawn	07.04.2005	Hielscher
Prepared	07.04.2005	Hohmann
Checked	07.04.2005	Heuer
Approved	07.04.2005	Heuer

AMMONIA / UREA PROJECT SUEZ II

Designation: Wiring diagram 382U001-EH1

Store Location: Server \\p013040\013040-ADA

Store Location: Folder \EI-ET\DH_el-wiring-diag\

Store Name 01-3040_382U001-EH1_000_01.dwg

ISO A3

BORDER-A3_013040.dwg / AG03A3_013040.dwg / 17.05.2004

FIELD

INSTRUMENT | JUNCTION BOX

Substation 1

340-NSP-33

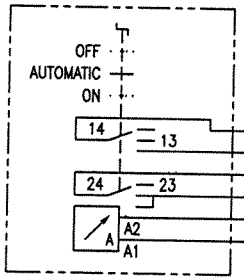

LOCAL MOTOR CONTROL SWITCH

040VB02

R-X03

382U001-M01-S1-W01S
JE-Y(ST)Y..Bd 4x2x0,8

MCC : 385CC11E

FEEDER : 57.06C

-X2

Current Measurement	I+	1	1
	I-	2	2
Running Indication	RS-	15	3
	RS+	16	4
Failure	FS-	19	5
Failure	FS+	20	6
Motor On/Off	CR-	12	7
	CR+	11	8

R-X04

382U001-M01-A1-W01S
JE-Y(ST)Y..Bd 4x2x0,8

DCS S800

	Term.	Board. Channel	Location	Cabinet	Controller	Tag Number
-	C9	DI800_08.09	R03	340-NSP-33	AC 3	82U1M1MO
+	B9					
-	C10	DI800_08.10	R03	340-NSP-33	AC 3	82U1M1MS
+	B10					
-	C11	DI800_08.11	R03	340-NSP-33	AC 3	82U1M1RS
+	B11					
-	C12	DI800_08.12	R03	340-NSP-33	AC 3	82U1M1FS
+	B12					
-	A1	DO800_03.01	R09	340-NSP-33	AC 3	82U1M1CR
+	C1					

Document-ID-BAR-Code

Rev.	Date	Name (Drawn/Prepared)	Date	Name (Checked)	Date	Name (Approved)	Description	Acc. Code
01	20.09.06	Hie	20.09.06	Heuer	20.09.06	Heuer	AS BUILT	

UAN 01-3040 | Document ID UD-EL-G00-FS-0001 | Part | Rev. 01 | Group

Uhde

All rights reserved © Uhde GmbH

Pro. Unit | TON | Cat. Code | Acc. Code | Status

Con. Unit | Type of Document DH | Order No. | Scale | Tot. Sheets

	Date	Name
Drawn	07.04.2005	Hielscher
Prepared	07.04.2005	Hohmann
Checked	07.04.2005	Heuer
Approved	07.04.2005	Heuer

AMMONIA / UREA PROJECT SUEZ II

Designation
Wiring diagram
382U001-M01

Store Location: Server \\p013040\013040-ADA

Store Location: Folder \EI-ET\DH_el-wiring-diag\

Store Name 01-3040_382U001-M01_000_01.dwg

ISO A3

BORDER-A3_013040.dwg / AG03A3_013040.dwg / 17.05.2004

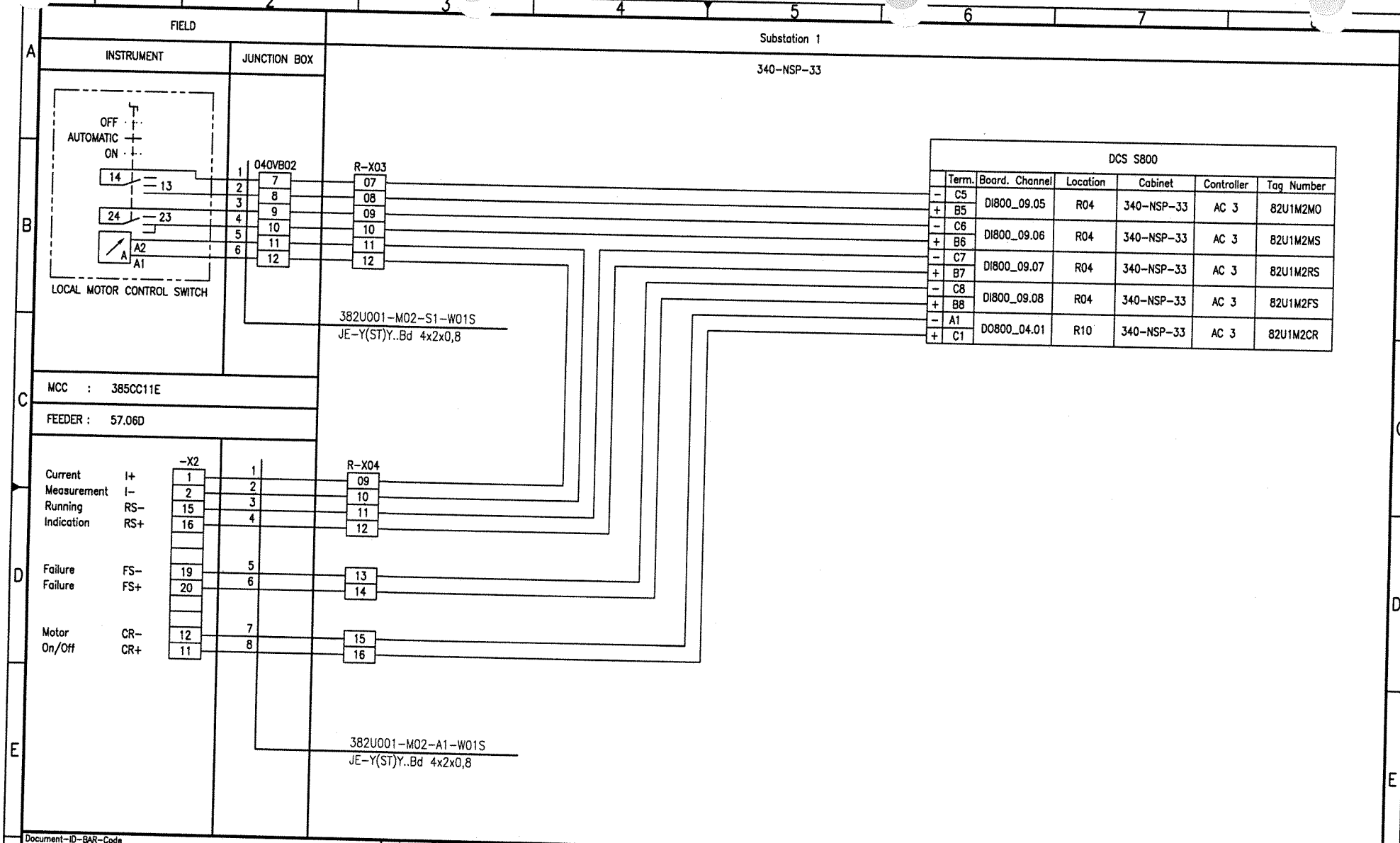
FIELD
INSTRUMENT
JUNCTION BOX
Substation 1
340-NSP-33
OFF
AUTOMATIC
ON
14
13
24
23
A2
A1
LOCAL MOTOR CONTROL SWITCH
040VB02
R-X03
07
08
09
10
11
12
382U001-M02-S1-W01S
JE-Y(ST)Y..Bd 4x2x0,8
MCC : 385CC11E
FEEDER : 57.06D
-X2
Current Measurement I+ 1
I- 2
Running Indication RS- 15
RS+ 16
Failure FS- 19
Failure FS+ 20
Motor On/Off CR- 12
CR+ 11
R-X04
09
10
11
12
13
14
15
16
382U001-M02-A1-W01S
JE-Y(ST)Y..Bd 4x2x0,8
DCS S800
Term. Board. Channel Location Cabinet Controller Tag Number
- C5 DI800_09.05 R04 340-NSP-33 AC 3 82U1M2MO
+ B5
- C6 DI800_09.06 R04 340-NSP-33 AC 3 82U1M2MS
+ B6
- C7 DI800_09.07 R04 340-NSP-33 AC 3 82U1M2RS
+ B7
- C8 DI800_09.08 R04 340-NSP-33 AC 3 82U1M2FS
+ B8
- A1 DO800_04.01 R10 340-NSP-33 AC 3 82U1M2CR
+ C1
BORDER-A3_013040.dwg / AC03A3_013040.dwg / 17.05.2004
Document-ID-BAR-Code
01 20.09.06 Hie Hie 20.09.06 Heuer 20.09.06 Heuer AS BUILT
Rev. Date Name Drawn/Prepared Date Name Checked Date Name Approved Description Acc. Code
UAN 01-3040
Code Document ID UD-EL-G00-FS-0001 Part Rev. 01 Group
Uhde
All rights reserved © Uhde GmbH
Pro. Unit TON Cat. Code Acc. Code Status
Con. Unit Type of Document DH Order No. Scale Tot. Sheets
Drawn 07.04.2005 Hielscher
Prepared 07.04.2005 Hohmann
Checked 07.04.2005 Heuer
Approved 07.04.2005 Heuer
AMMONIA / UREA PROJECT SUEZ II
Designation
Wiring diagram 382U001-M02
Store Location: Server \\p013040\013040-ADA
Store Location: Folder \EI-ET\DH_el-wiring-diag\
Store Name 01-3040_382U001-M02_000_01.dwg
ISO A3

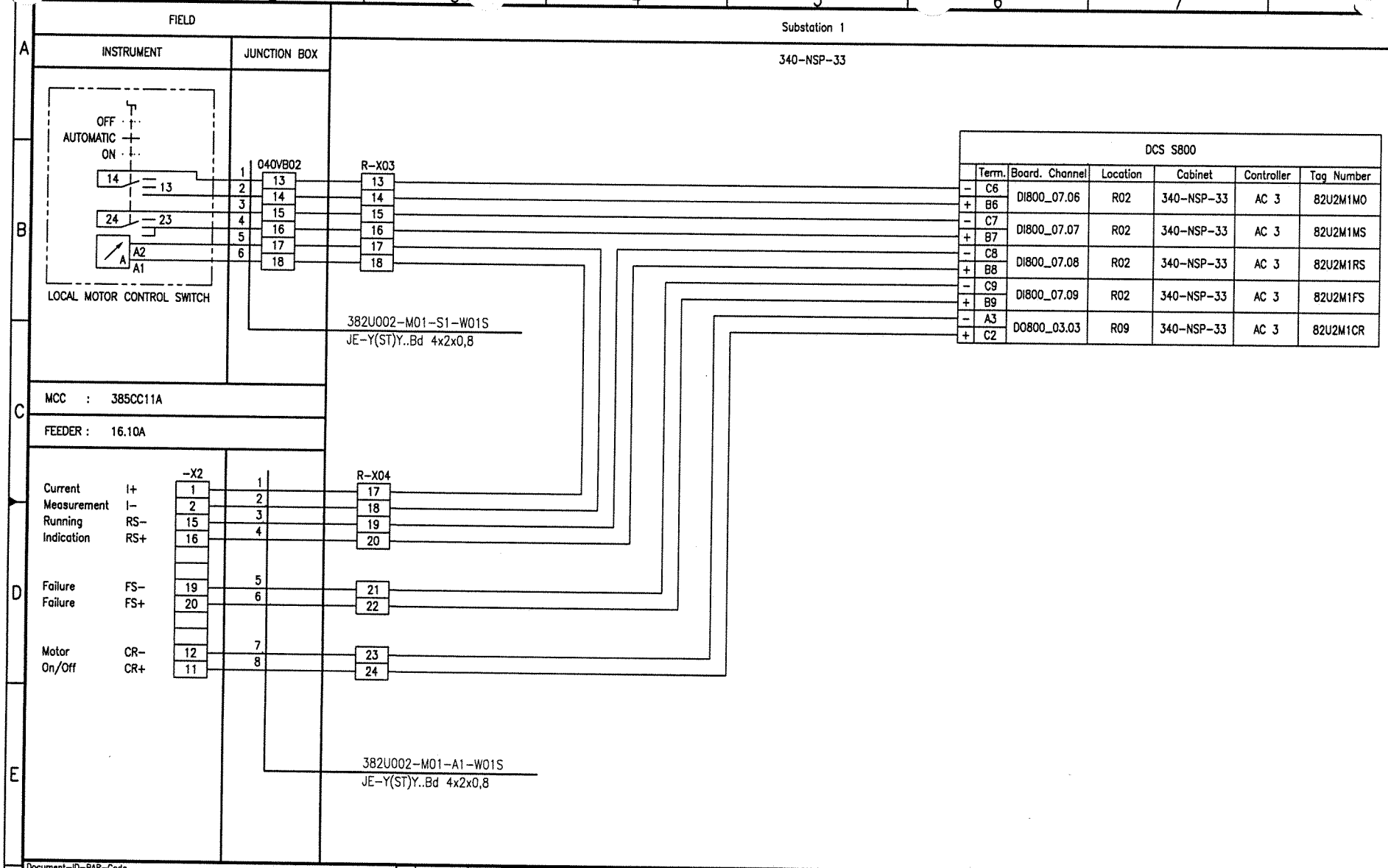

Document-ID-BAR-Code

Rev.	Date	Name (Drawn/Prepared)		Date	Name (Checked)	Date	Name (Approved)	Description	Acc. Code
01	20.09.06	Hie	Hie	20.09.06	Heuer	20.09.06	Heuer	AS BUILT	

UAN	Document ID	Part	Rev.	Group
01-3040	UD-EL-G00-FS-0001		01	

Code

Uhde

All rights reserved © Uhde GmbH

Pro. Unit	TON	Cat. Code	Acc. Code	Status
Con. Unit	Type of Document: DH	Order No.	Scale	Tot. Sheets

	Date	Name
Drawn	07.04.2005	Hielscher
Prepared	07.04.2005	Hohmann
Checked	07.04.2005	Heuer
Approved	07.04.2005	Heuer

AMMONIA / UREA PROJECT SUEZ II

Designation
Wiring diagram
382U002-M01

Store Location: Server
\\p013040\013040-ADA

Store Location: Folder
\Ei-ET\DH_el-wiring-diag\

Store Name
01-3040_382U002-M01_000_01.dwg

ISO A3

BORDER-A3_013040.dwg / A0035A3_013040.dwg / 17.05.2004

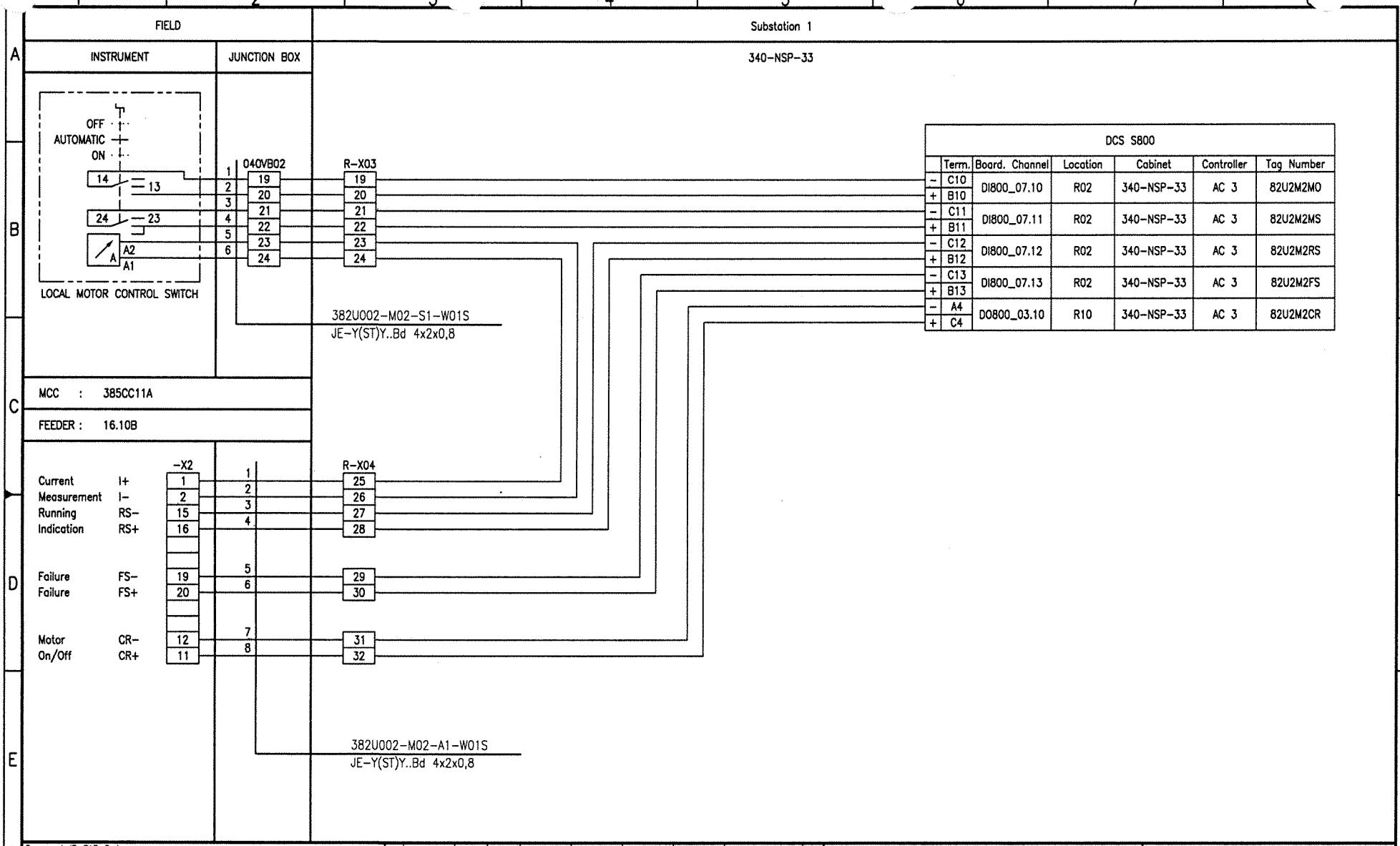

Document-ID-BAR-Code

Rev.	Date	Name (Drawn/Prepared)	Date	Name (Checked)	Date	Name (Approved)	Description	Acc. Code
01	20.09.06	Hie Hie	20.09.06	Heuer	20.09.06	Heuer	AS BUILT	

UAN	Document ID	Part	Rev.	Group
01-3040	UD-EL-G00-FS-0001		01	

Code

Uhde

All rights reserved © Uhde GmbH

Pro. Unit	TON	Cat. Code	Acc. Code	Status

Con. Unit	Type of Document	Order No.	Scale	Tot. Sheets
	DH			

	Date	Name
Drawn	07.04.2005	Hielscher
Prepared	07.04.2005	Hohmann
Checked	07.04.2005	Heuer
Approved	07.04.2005	Heuer

AMMONIA / UREA PROJECT SUEZ II

Designation
Wiring diagram
382U002-M02

Store Location: Server \\p013040\013040-ADA
Store Location: Folder \Ei-ET\DH_el-wiring-diag\
Store Name 01-3040_382U002-M02_000_01.dwg

ISO A3

BORDER-A3_013040.dwg / A03A3_013040.dwg / 17.05.2004

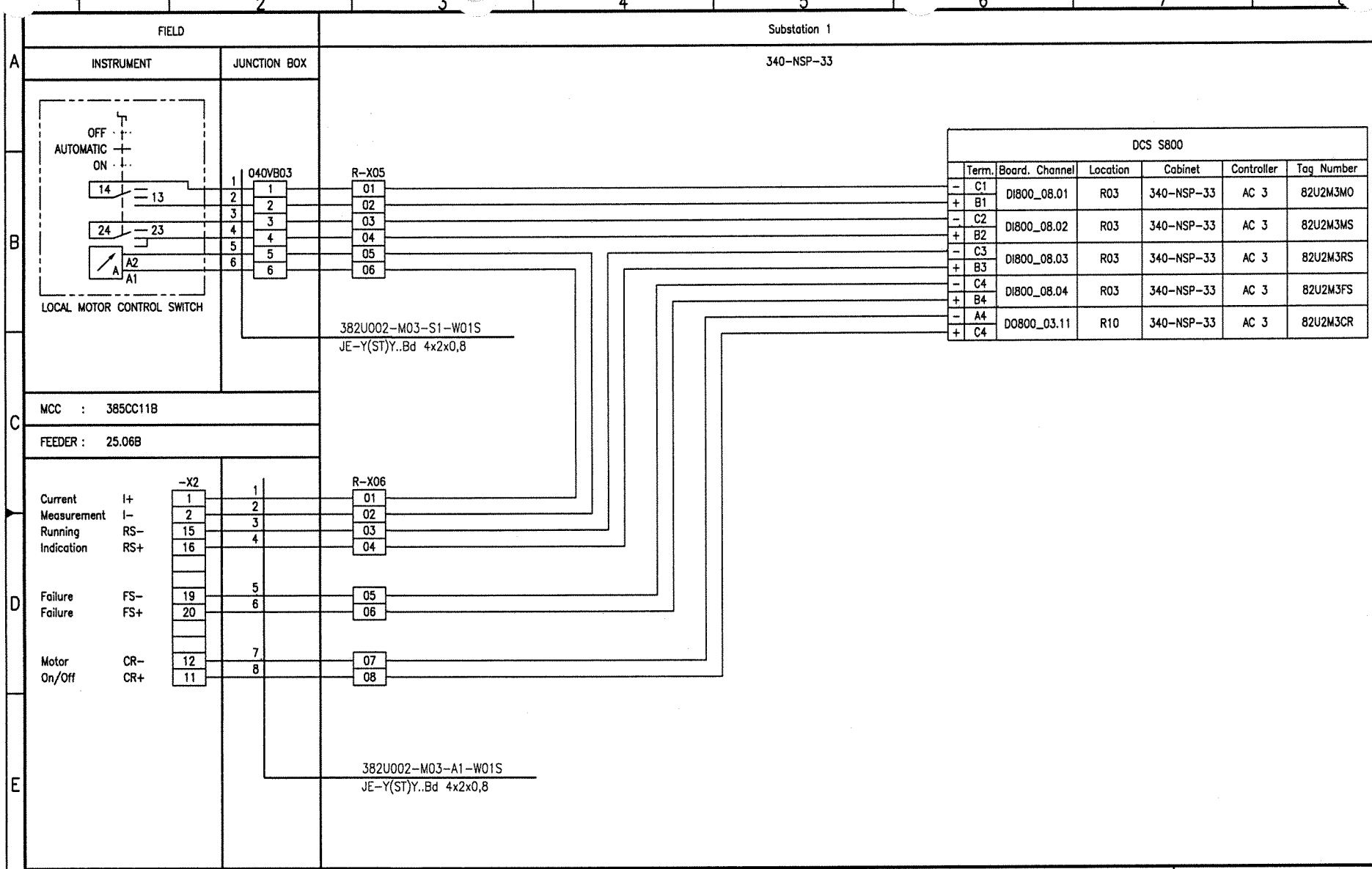

Document-ID-BAR-Code

Rev.	Date	Name	Date	Name	Date	Name	Description	Acc. Code
01	20.09.06	Hie / Hie	20.09.06	Heuer	20.09.06	Heuer	AS BUILT	
	Drawn/Prepared		Checked		Approved			

Pro. Unit	TON	Cat. Code	Acc. Code	Status
Con. Unit	Type of Document: DH	Order No.	Scale	Tot. Sheets

	Date	Name
Drawn	07.04.2005	Hielscher
Prepared	07.04.2005	Hohmann
Checked	07.04.2005	Heuer
Approved	07.04.2005	Heuer

Store Location: Server \\p013040\013040-ADA
Store Location: Folder \Ei-ET\DH_el-wiring-diag\
Store Name 01-3040_382U002-M03_000_01.dwg

Code
UAN 01-3040
Document ID UD-EL-G00-FS-0001
Part
Rev. 01
Group

Uhde

All rights reserved © Uhde GmbH

AMMONIA / UREA PROJECT SUEZ II

Designation
Wiring diagram
382U002-M03

ISO A3

BORDER-A3_013040.dwg / AG03A3_013040.dwg / 17.05.2004

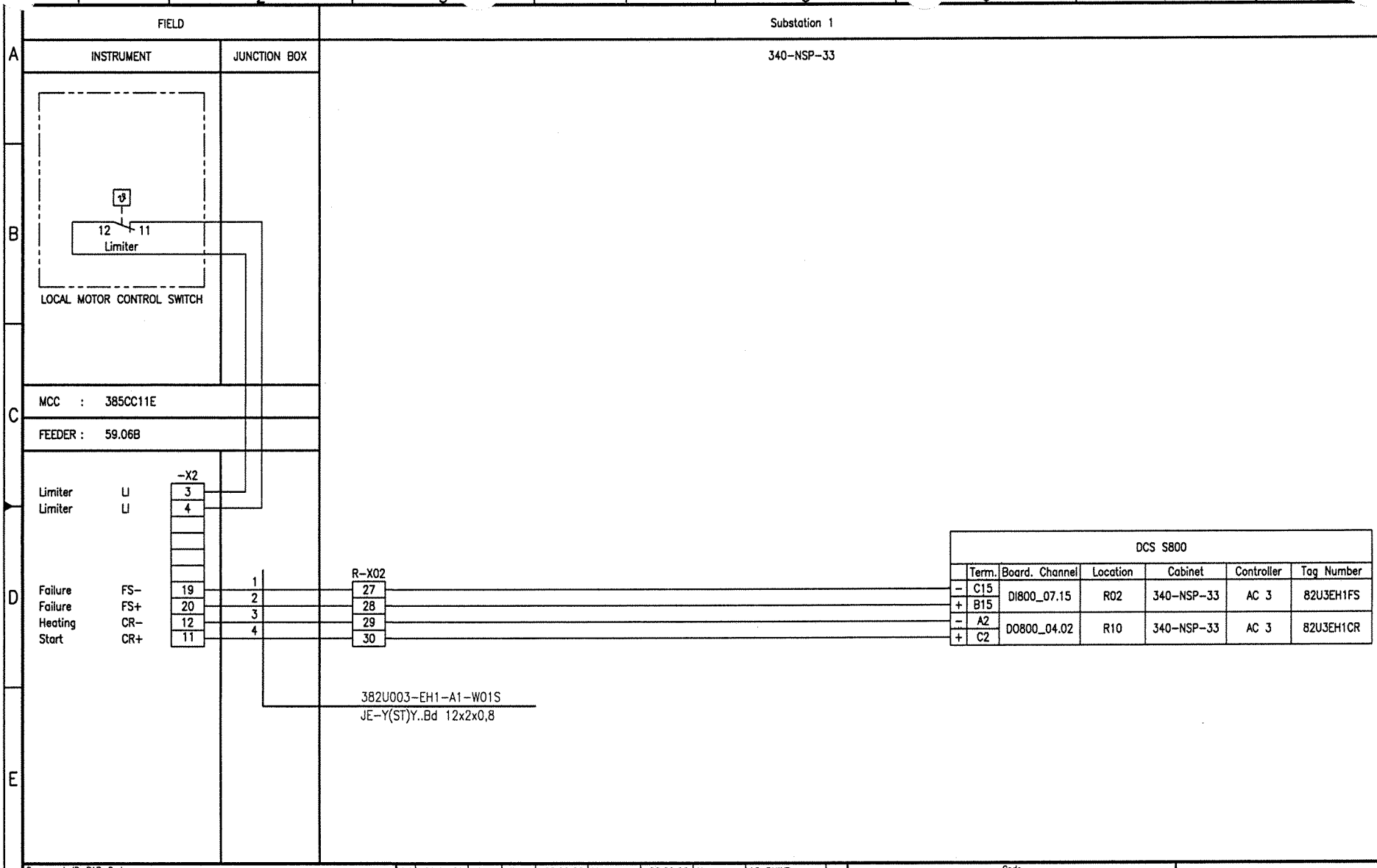

Document-ID-BAR-Code

Rev.	Date	Name	Date	Name	Date	Name	Description	Acc. Code
01	20.09.06	Hie	20.09.06	Heuer	20.09.06	Heuer	AS BUILT	
	Drawn/Prepared		Checked		Approved			

UAN	Document ID	Part	Rev.	Group
01-3040	UD-EL-G00-FS-0001		01	

Code

Uhde

All rights reserved © Uhde GmbH

Pro. Unit	TON	Cat. Code	Acc. Code	Status
Con. Unit	Type of Document: DH	Order No.	Scale	Tot. Sheets

	Date	Name
Drawn	07.04.2005	Hielscher
Prepared	07.04.2005	Hohmann
Checked	07.04.2005	Heuer
Approved	07.04.2005	Heuer

AMMONIA / UREA
PROJECT
SUEZ II

Designation
Wiring diagram
382U003-EH1

Store Location: Server
\\p013040\013040-ADA

Store Location: Folder
\EI-ET\DH_el-wiring-diag\

Store Name
01-3040_382U003-EH1_000_01.dwg

ISO A3

BORDER-A3_013040.dwg / A3D3A3_013040.dwg / 17.05.2004

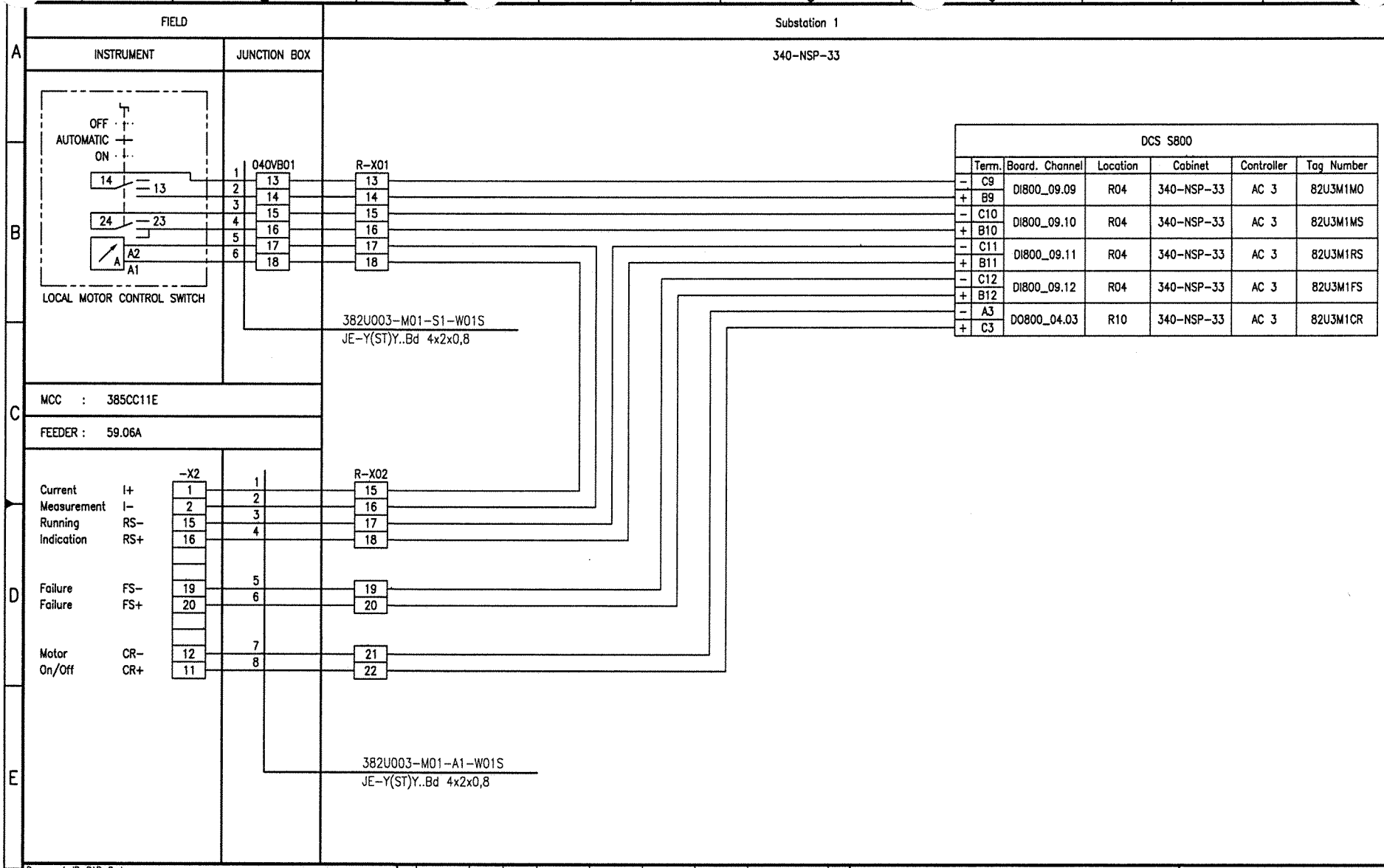

Document-ID-BAR-Code

Rev.	Date	Name (Drawn/Prepared)	Date	Name (Checked)	Date	Name (Approved)	Description	Acc. Code
01	20.09.06	Hie Hie	20.09.06	Heuer	20.09.06	Heuer	AS BUILT	

UAN	Document ID	Part	Rev.	Group
01-3040	UD-EL-G00-FS-0001		01	

Code

Uhde

All rights reserved © Uhde GmbH

Pro. Unit	TON	Cat. Code	Acc. Code	Status

Con. Unit	Type of Document	Order No.	Scale	Tot. Sheets
	DH			

	Date	Name
Drawn	07.04.2005	Hielscher
Prepared	07.04.2005	Hohmann
Checked	07.04.2005	Heuer
Approved	07.04.2005	Heuer

AMMONIA / UREA PROJECT SUEZ II

Designation
Wiring diagram
382U003-M01

Store Location: Server
\\p013040\013040-ADA

Store Location: Folder
\Ei-ET\DH_el-wiring-diag\

Store Name
01-3040_382U003-M01_000_01.dwg

ISO A3

BORDER-A3_013040.dwg / AG13A3_013040.dwg / 17.05.2004

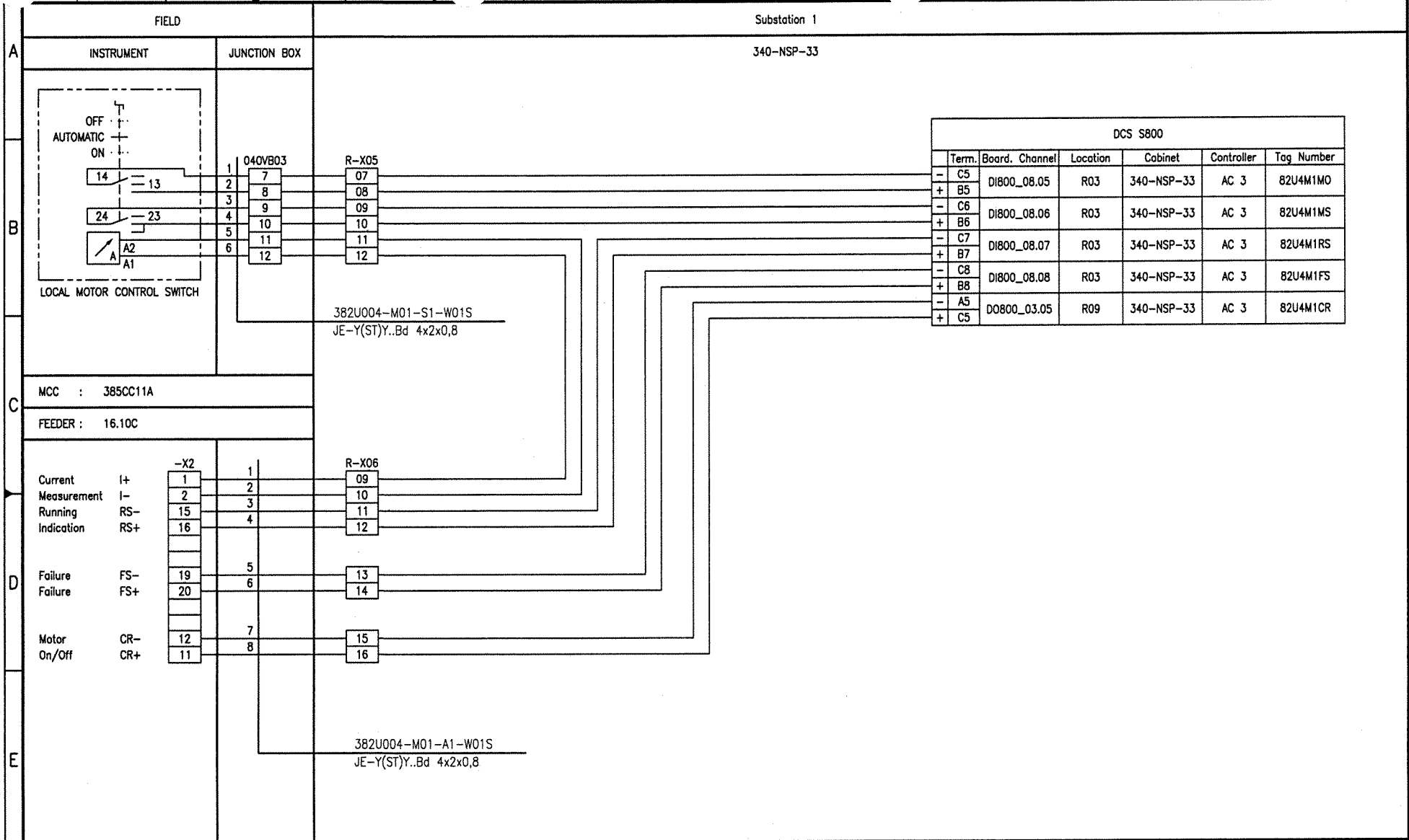

Document-ID-BAR-Code

Rev.	Date	Name (Drawn/Prepared)	Date	Name (Checked)	Date	Name (Approved)	Description	Acc. Code
01	20.09.06	Hie Hie	20.09.06	Heuer	20.09.06	Heuer	AS BUILT	

UAN	Document ID	Part	Rev.	Group
01-3040	UD-EL-G00-FS-0001		01	

Code

Uhde

All rights reserved © Uhde GmbH

Pro. Unit	TON	Cat. Code	Acc. Code	Status

Con. Unit	Type of Document	Order No.	Scale	Tot. Sheets
	DH			

	Date	Name
Drawn	07.04.2005	Hielscher
Prepared	07.04.2005	Hohmann
Checked	07.04.2005	Heuer
Approved	07.04.2005	Heuer

AMMONIA / UREA PROJECT SUEZ II

Designation
Wiring diagram
382U004-M01

Store Location: Server \\p013040\013040-ADA
Store Location: Folder \Ei-ET\DH_el-wiring-diag\
Store Name 01-3040_382U004-M01_000_01.dwg

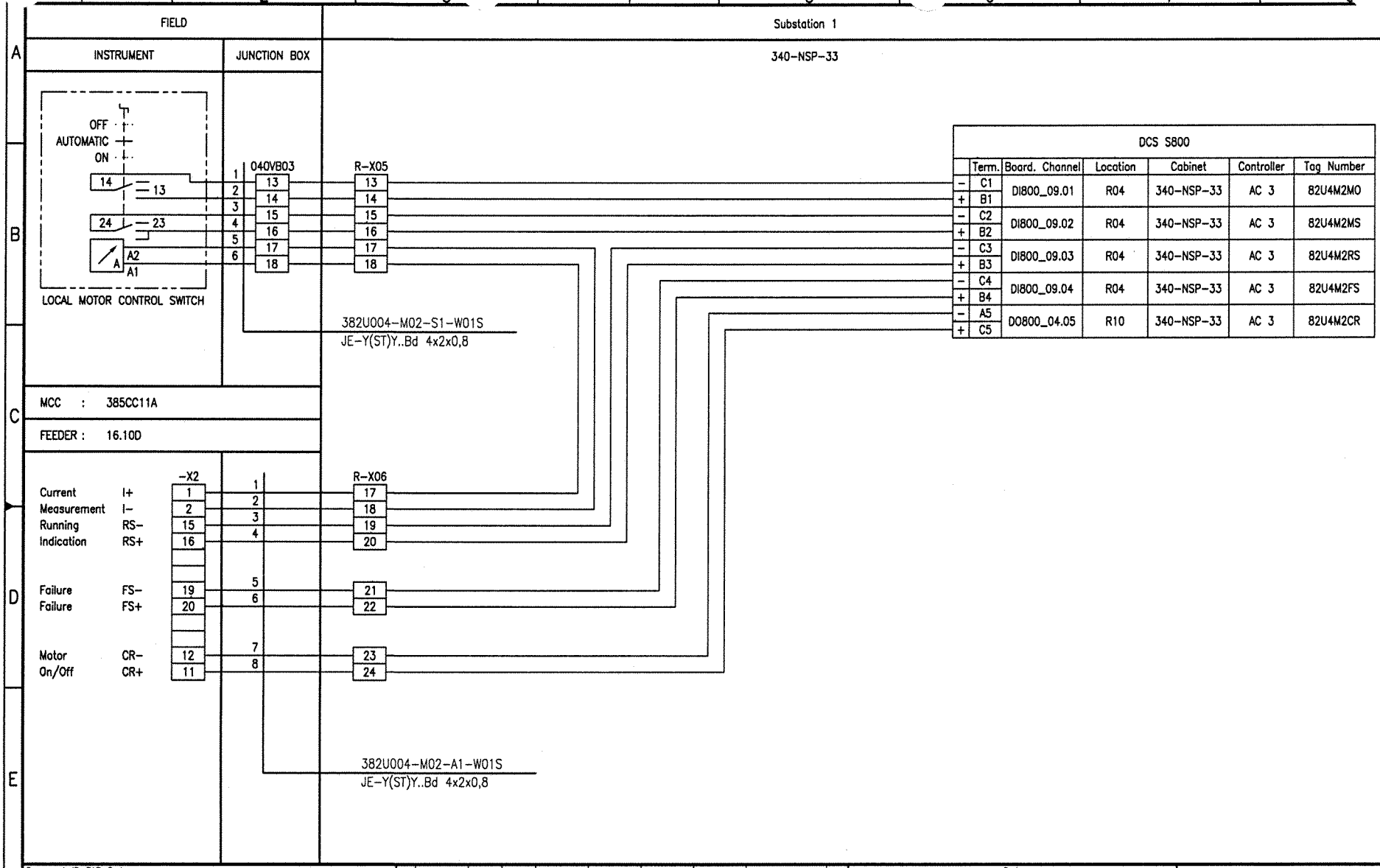

Document-ID-BAR-Code

Rev.	Date	Name (Drawn/Prepared)	Date	Name (Checked)	Date	Name (Approved)	Description	Acc. Code
01	20.09.06	Hie Hie	20.09.06	Heuer	20.09.06	Heuer	AS BUILT	

UAN	Document ID	Part	Rev.	Group
01-3040	UD-EL-G00-FS-0001		01	

Code

Uhde

All rights reserved © Uhde GmbH

Pro. Unit	TON	Cat. Code	Acc. Code	Status
Con. Unit	Type of Document: DH	Order No.	Scale	Tot. Sheets

	Date	Name
Drawn	07.04.2005	Hielscher
Prepared	07.04.2005	Hohmann
Checked	07.04.2005	Heuer
Approved	07.04.2005	Heuer

AMMONIA / UREA PROJECT SUEZ II

Designation
Wiring diagram
382U004-M02

Store Location: Server \\p013040\013040-ADA
Store Location: Folder \EI-ET\DH_el-wiring-diag\
Store Name 01-3040_382U004-M02_000_01.dwg

ISO A3

BORDER-A3_013040.dwg / A003A3_013040.dwg / 17.05.2004

CONTENTS

Loop Index (S 800 MOTORS) Processunit 383
Steam Generation

Tag No.	Rev.	Crossreference: See	Remarks	File No.
383K001-M01	01			
383K002AM01	01			
383K002BM01	01			

I:\Ep-ET\DH_el-wiring-diag\01-3040_Wiring_diagrams_coversheet_01.doc

FIELD | Substation 1

INSTRUMENT | JUNCTION BOX | 340-NSP-33

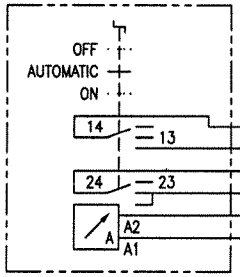

LOCAL MOTOR CONTROL SWITCH

030VB03

R-X07

383K001-M01-S1-W01S
JE-Y(ST)Y..Bd 4x2x0,8

MCC : 385CB11

FEEDER : 43

-X09

R-X08

		-X09	R-X08
Current	I+	1	01
Measurement	I-	2	02
Running Indication	RS2-	3	03
Space Heater	RS2+	4	04
Motor	CR1-	6	05
On	CR1+	5	06
Motor	CR2-	8	07
Off	CR2+	7	08
Running Indication	RS1-	9	09
Motor	RS1+	10	10
Failure	FS-	11	11
Failure	FS+	13	12
Power	P+	15	13
Measurement	P-	16	14

383K001-M01-A1-W01S
JE-Y(ST)Y..Bd 12x2x0,8

DCS S800

	Term.	Board. Channel	Location	Cabinet	Controller	Tag Number
-	C5	DI800_10.05	R05	340-NSP-33	AC 3	83K1M1MO
+	B5					
-	C6	DI800_10.06	R05	340-NSP-33	AC 3	83K1M1MS
+	B6					
+	C4	AI800_03.02	R01	340-NSP-33	AC 3	IT-383901
-	A4					
-	C7	DI800_10.07	R05	340-NSP-33	AC 3	83K1M1SHRS
+	B7					
-	A7	DO800_04.07	R10	340-NSP-33	AC 3	83K1M1CR1
+	C7					
-	A8	DO800_04.08	R10	340-NSP-33	AC 3	83K1M1CR2
+	C8					
-	C8	DI800_10.08	R05	340-NSP-33	AC 3	83K1M1RS
+	B8					
-	C9	DI800_10.09	R05	340-NSP-33	AC 3	83K1M1FS
+	B9					

340-NSP-34
R-X14

X320

Control Building / Rack Room

DCS S100

	Term.	Board. Channel	Location	Cabinet	Controller	Tag Number
-	32	PU02.02	+H331.2	340-NSP-11 Rear	AC 3	83K1M1PI

Document-ID-BAR-Code

Rev.	Date	Name (Drawn/Prepared)	Date	Name (Checked)	Date	Name (Approved)	Description	Acc. Code
01	20.09.06	Hie Hie	20.09.06	Heuer	20.09.06	Heuer	AS BUILT	

Pro. Unit	TON	Cat. Code	Acc. Code	Status

Con. Unit	Type of Document	Order No.	Scale	Tot. Sheets
	DH			

	Date	Name
Drawn	08.04.2005	Hielscher
Prepared	08.04.2005	Hohmann
Checked	08.04.2005	Heuer
Approved	08.04.2005	Heuer

Code: UAN 01-3040 | Document ID UD-EL-G00-FS-0001 | Part | Rev. 01 | Group

Uhde

All rights reserved © Uhde GmbH

AMMONIA / UREA PROJECT SUEZ II

Designation: Wiring diagram 383K001-M01

Store Location: Server \\p013040\013040-ADA
Store Location: Folder \Ei-ET\DH_el-wiring-diag\
Store Name 01-3040_383K001-M01_000_01.dwg

ISO A3

BORDER-A3_013040.dwg / A03A3_013040.dwg / 17.05.2004

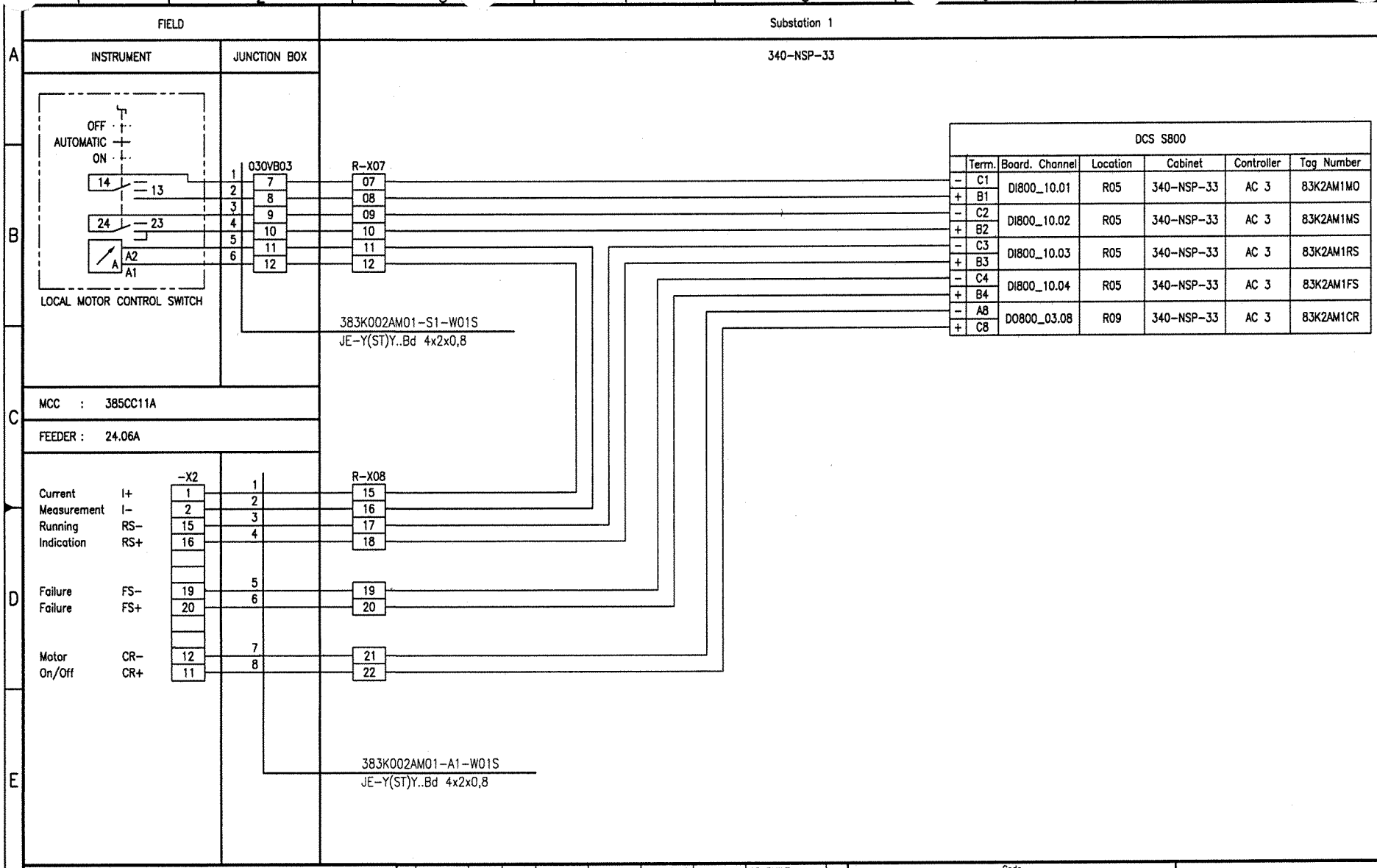

Document-ID-BAR-Code

Rev.	Date	Name (Drawn/Prepared)	Date	Name (Checked)	Date	Name (Approved)	Description	Acc. Code
01	20.09.06	Hie Hie	20.09.06	Heuer	20.09.06	Heuer	AS BUILT	

UAN	Document ID	Part	Rev.	Group
01-3040	UD-EL-G00-FS-0001		01	

Code

Uhde

All rights reserved © Uhde GmbH

Pro. Unit	TON	Cat. Code	Acc. Code	Status
Con. Unit	Type of Document: DH	Order No.	Scale	Tot. Sheets

	Date	Name
Drawn	08.04.2005	Hielscher
Prepared	08.04.2005	Hohmann
Checked	08.04.2005	Heuer
Approved	08.04.2005	Heuer

AMMONIA / UREA PROJECT SUEZ II

Designation
Wiring diagram
383K002AM01

Store Location: Server \\p013040\013040-ADA
Store Location: Folder \Ei-ET\DH_el-wiring-diag\
Store Name 01-3040_383K002AM01_000_01.dwg

ISO A3

BORDER-A3_013040.dwg / AG03A3_013040.dwg / 17.05.2004

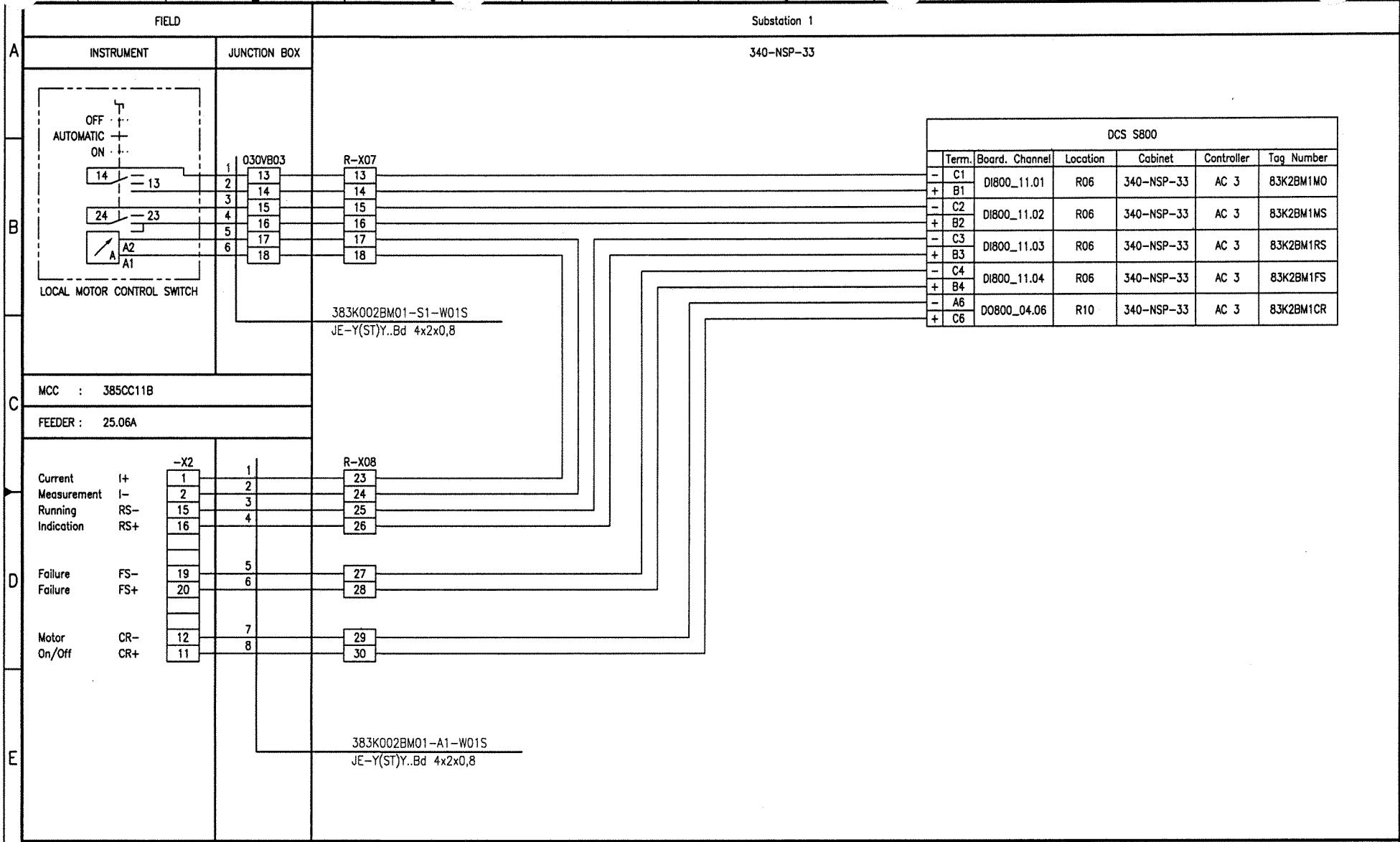

Document-ID-BAR-Code

Rev.	Date	Name (Drawn/Prepared)	Date	Name (Checked)	Date	Name (Approved)	Description	Acc. Code
01	20.09.06	Hie Hie	20.09.06	Heuer	20.09.06	Heuer	AS BUILT	

Pro. Unit	TON	Cat. Code	Acc. Code	Status

Con. Unit	Type of Document	Order No.	Scale	Tot. Sheets
	DH			

	Date	Name
Drawn	08.04.2005	Hielscher
Prepared	08.04.2005	Hohmann
Checked	08.04.2005	Heuer
Approved	08.04.2005	Heuer

Code

UAN	Document ID	Part	Rev.	Group
01-3040	UD-EL-G00-FS-0001		01	

Uhde

All rights reserved © Uhde GmbH

AMMONIA / UREA PROJECT SUEZ II

Designation
Wiring diagram
383K002BM01

Store Location: Server
\\p013040\013040-ADA

Store Location: Folder
\Ei-ET\DH_el-wiring-diag\

Store Name
01-3040_383K002BM01_000_01.dwg

CONTENTS

Loop Index (S 800 MOTORS) Processunit 384
Instr. Plant Air System

Tag No.	Rev.	Crossreference: See	Remarks	File No.
384E010-M01	01			
384K001AM01	01			
384K001BM01	01			
384P010-M01	01			

I:\Ei-ETUDH_el-wiring-diag\01-3040_Wiring_diagrams_coversheet_01.doc

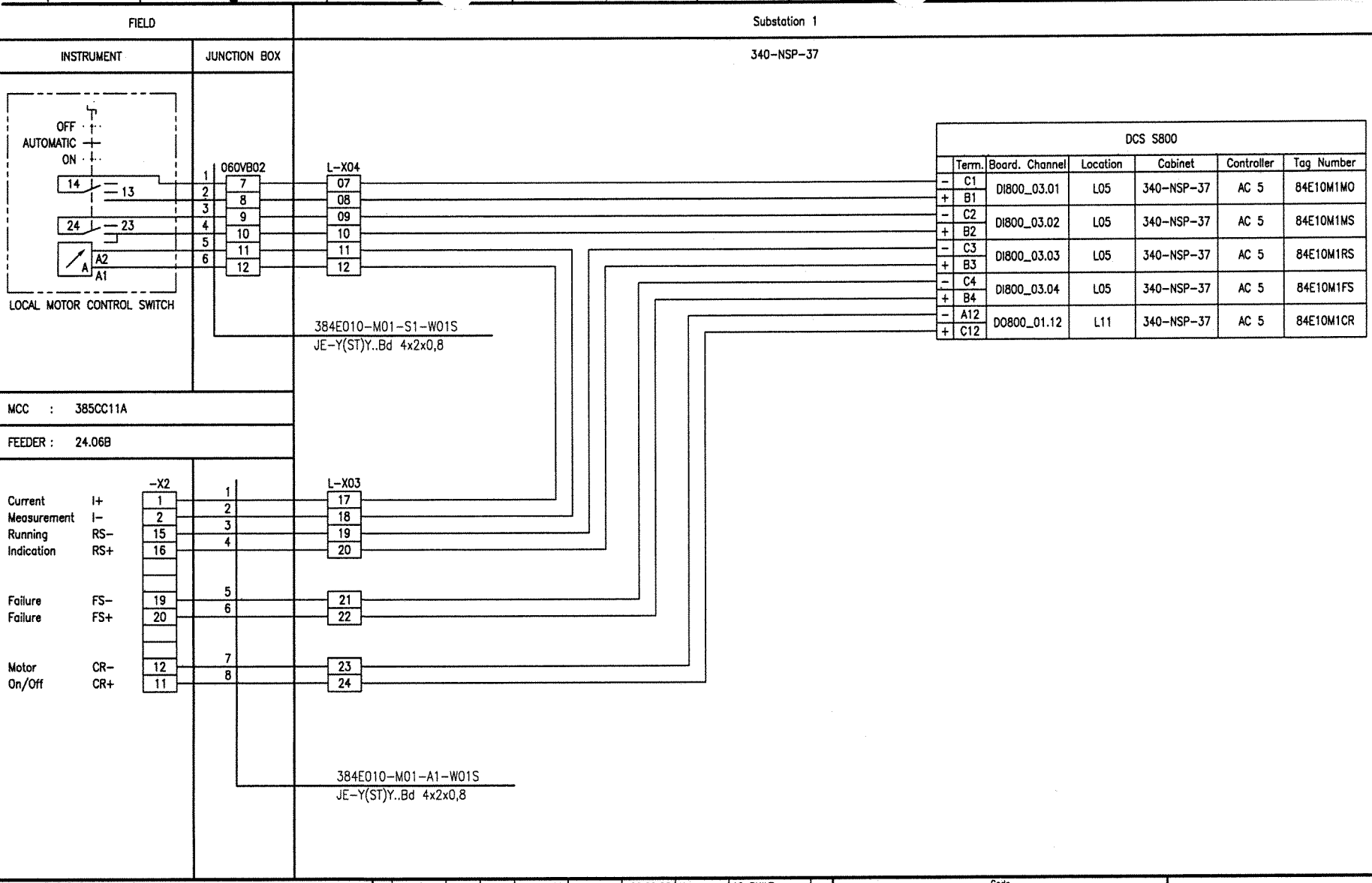

Document-ID-BAR-Code

Rev.	Date	Name (Drawn/Prepared)	Date	Name (Checked)	Date	Name (Approved)	Description	Acc. Code
01	20.09.06	Hie Hie	20.09.06	Heuer	20.09.06	Heuer	AS BUILT	

UAN	Document ID	Part	Rev.	Group
01-3040	UD-EL-G00-FS-0001		01	

Code

Uhde

All rights reserved © Uhde GmbH

Pro. Unit	TON	Cat. Code	Acc. Code	Status
Con. Unit	Type of Document: DH	Order No.	Scale	Tot. Sheets

	Date	Name
Drawn	08.04.2005	Hielscher
Prepared	08.04.2005	Hohmann
Checked	08.04.2005	Heuer
Approved	08.04.2005	Heuer

AMMONIA / UREA PROJECT SUEZ II

Designation
Wiring diagram
384E010-M01

Store Location: Server \\p013040\013040-ADA
Store Location: Folder \Ei-ET\DH_ei-wiring-diag\
Store Name 01-3040_384E010-M01_000_01.dwg

ISO A3

BORDER-A3_013040.dwg / AG0343_013040.dwg / 17.05.2004

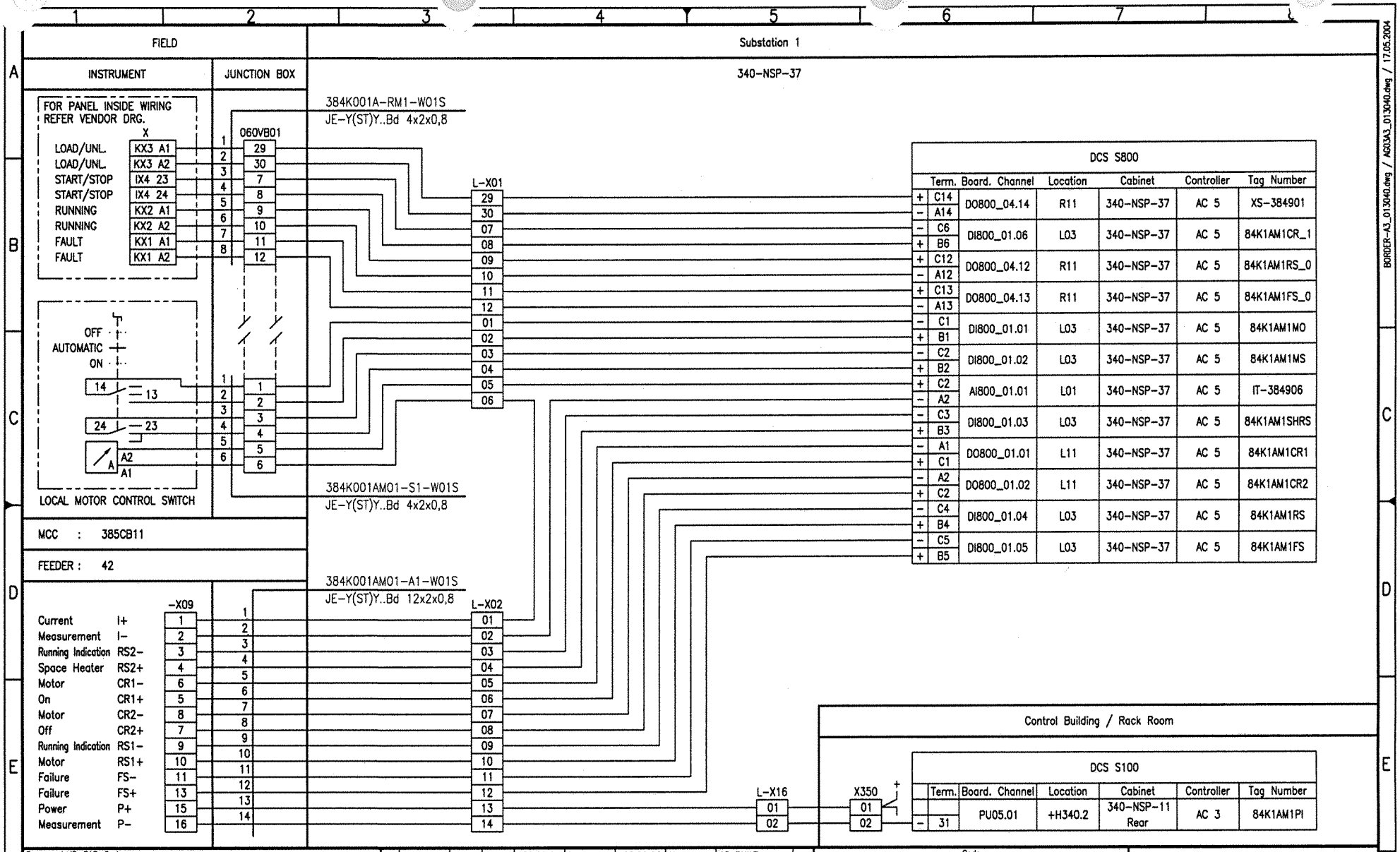
FIELD
Substation 1
INSTRUMENT
JUNCTION BOX
340-NSP-37
FOR PANEL INSIDE WIRING
REFER VENDOR DRG.
X
LOAD/UNL. KX3 A1
LOAD/UNL. KX3 A2
START/STOP IX4 23
START/STOP IX4 24
RUNNING KX2 A1
RUNNING KX2 A2
FAULT KX1 A1
FAULT KX1 A2
060VB01
384K001A-RM1-W01S
JE-Y(ST)Y..Bd 4x2x0,8
L-X01
OFF
AUTOMATIC
ON
14
13
24
23
A2
A1
LOCAL MOTOR CONTROL SWITCH
384K001AM01-S1-W01S
JE-Y(ST)Y..Bd 4x2x0,8
MCC : 385CB11
FEEDER : 42
384K001AM01-A1-W01S
JE-Y(ST)Y..Bd 12x2x0,8
-X09
Current I+
Measurement I-
Running Indication RS2-
Space Heater RS2+
Motor CR1-
On CR1+
Motor CR2-
Off CR2+
Running Indication RS1-
Motor RS1+
Failure FS-
Failure FS+
Power P+
Measurement P-
L-X02
L-X16
X350
Control Building / Rack Room
DCS S800
Term. Board. Channel Location Cabinet Controller Tag Number
+ C14 DO800_04.14 R11 340-NSP-37 AC 5 XS-384901
- A14
- C6 DI800_01.06 L03 340-NSP-37 AC 5 84K1AM1CR_1
+ B6
+ C12 DO800_04.12 R11 340-NSP-37 AC 5 84K1AM1RS_0
- A12
+ C13 DO800_04.13 R11 340-NSP-37 AC 5 84K1AM1FS_0
- A13
- C1 DI800_01.01 L03 340-NSP-37 AC 5 84K1AM1MO
+ B1
- C2 DI800_01.02 L03 340-NSP-37 AC 5 84K1AM1MS
+ B2
+ C2 AI800_01.01 L01 340-NSP-37 AC 5 IT-384906
- A2
- C3 DI800_01.03 L03 340-NSP-37 AC 5 84K1AM1SHRS
+ B3
- A1 DO800_01.01 L11 340-NSP-37 AC 5 84K1AM1CR1
+ C1
- A2 DO800_01.02 L11 340-NSP-37 AC 5 84K1AM1CR2
+ C2
- C4 DI800_01.04 L03 340-NSP-37 AC 5 84K1AM1RS
+ B4
- C5 DI800_01.05 L03 340-NSP-37 AC 5 84K1AM1FS
+ B5
DCS S100
Term. Board. Channel Location Cabinet Controller Tag Number
- 31 PU05.01 +H340.2 340-NSP-11 Rear AC 3 84K1AM1PI
Document-ID-BAR-Code
01 20.09.06 Hie Hie 20.09.06 Heuer 20.09.06 Heuer AS BUILT
Rev. Date Name Date Name Date Name Description Acc. Code
Drawn/Prepared Checked Approved
UAN 01-3040
Code
Document ID UD-EL-G00-FS-0001
Part
Rev. 01
Group
Uhde
All rights reserved © Uhde GmbH
Pro. Unit TON Cat. Code Acc. Code Status
Con. Unit Type of Document DH Order No. Scale Tot. Sheets
Date Name
Drawn 08.04.2005 Hielscher
Prepared 08.04.2005 Hohmann
Checked 08.04.2005 Heuer
Approved 08.04.2005 Heuer
AMMONIA / UREA
PROJECT
SUEZ II
Designation
Wiring diagram
384K001AM01
Store Location: Server
\\p013040\013040-ADA
Store Location: Folder
\EI-ET\DH_el-wiring-diag\
Store Name
01-3040_384K001AM01_000_01.dwg
ISO A3
BORDER-A3_013040.dwg / A03A3_013040.dwg / 17.05.2004

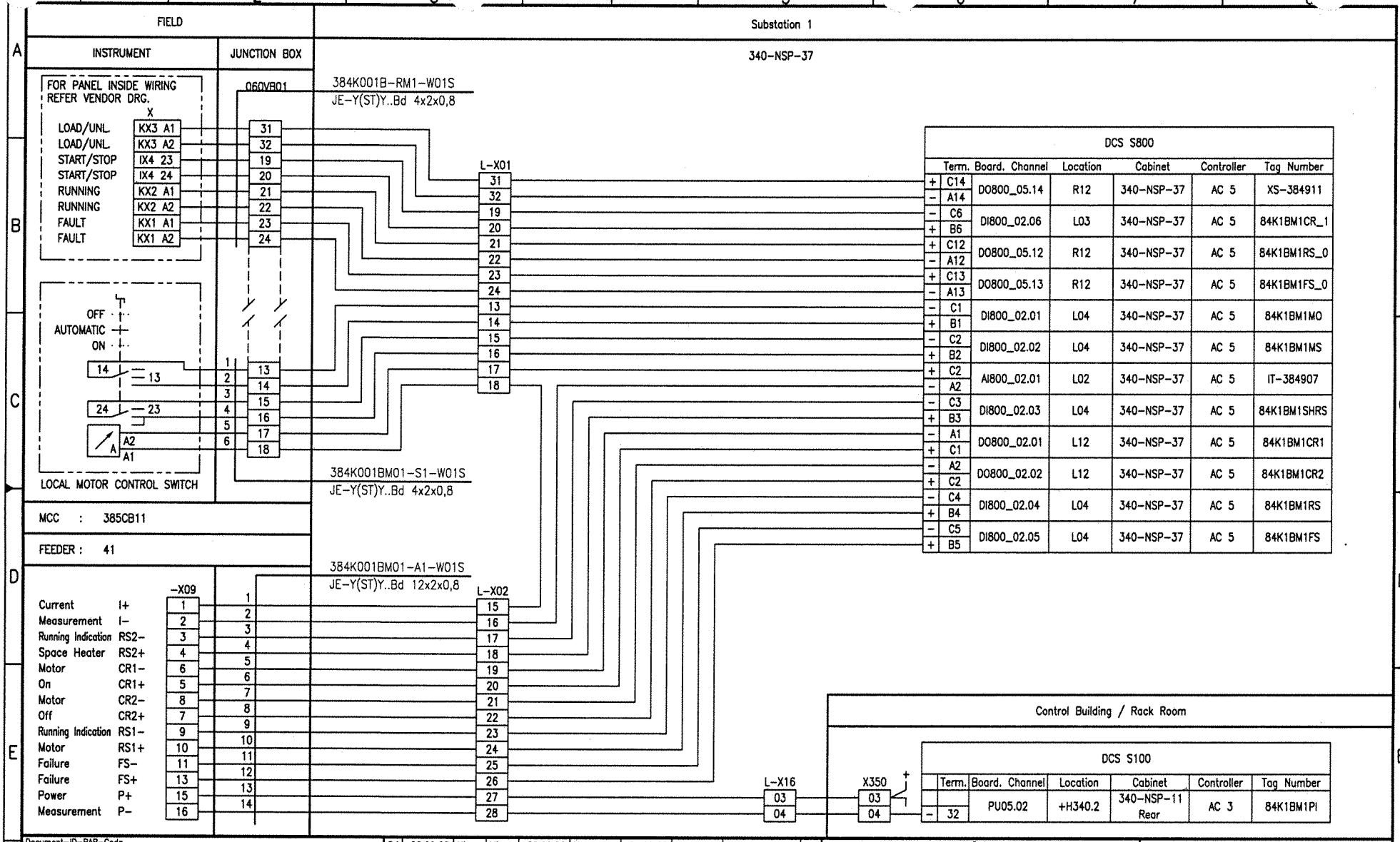
FIELD
INSTRUMENT
JUNCTION BOX
Substation 1
340-NSP-37
FOR PANEL INSIDE WIRING
REFER VENDOR DRG.
X
LOAD/UNL. KX3 A1
LOAD/UNL. KX3 A2
START/STOP IX4 23
START/STOP IX4 24
RUNNING KX2 A1
RUNNING KX2 A2
FAULT KX1 A1
FAULT KX1 A2
060VB01
384K001B-RM1-W01S
JE-Y(ST)Y..Bd 4x2x0,8
L-X01
OFF
AUTOMATIC
ON
LOCAL MOTOR CONTROL SWITCH
384K001BM01-S1-W01S
JE-Y(ST)Y..Bd 4x2x0,8
MCC : 385CB11
FEEDER : 41
384K001BM01-A1-W01S
JE-Y(ST)Y..Bd 12x2x0,8
-X09
Current I+
Measurement I-
Running Indication RS2-
Space Heater RS2+
Motor CR1-
On CR1+
Motor CR2-
Off CR2+
Running Indication RS1-
Motor RS1+
Failure FS-
Failure FS+
Power P+
Measurement P-
L-X02
L-X16
X350
Control Building / Rack Room
DCS S800
Term. Board. Channel Location Cabinet Controller Tag Number
+ C14 - A14 DO800_05.14 R12 340-NSP-37 AC 5 XS-384911
- C6 + B6 DI800_02.06 L03 340-NSP-37 AC 5 84K1BM1CR_1
+ C12 - A12 DO800_05.12 R12 340-NSP-37 AC 5 84K1BM1RS_0
+ C13 - A13 DO800_05.13 R12 340-NSP-37 AC 5 84K1BM1FS_0
- C1 + B1 DI800_02.01 L04 340-NSP-37 AC 5 84K1BM1MO
- C2 + B2 DI800_02.02 L04 340-NSP-37 AC 5 84K1BM1MS
+ C2 - A2 AI800_02.01 L02 340-NSP-37 AC 5 IT-384907
- C3 + B3 DI800_02.03 L04 340-NSP-37 AC 5 84K1BM1SHRS
- A1 + C1 DO800_02.01 L12 340-NSP-37 AC 5 84K1BM1CR1
- A2 + C2 DO800_02.02 L12 340-NSP-37 AC 5 84K1BM1CR2
- C4 + B4 DI800_02.04 L04 340-NSP-37 AC 5 84K1BM1RS
- C5 + B5 DI800_02.05 L04 340-NSP-37 AC 5 84K1BM1FS
DCS S100
Term. Board. Channel Location Cabinet Controller Tag Number
- 32 PU05.02 +H340.2 340-NSP-11 Rear AC 3 84K1BM1PI
Document-ID-BAR-Code
01 20.09.06 Hie Hie 20.09.06 Heuer 20.09.06 Heuer AS BUILT
Rev. Date Name Date Name Date Name Description Acc. Code
Drawn/Prepared Checked Approved
UAN 01-3040
Code Document ID UD-EL-G00-FS-0001 Part Rev. 01 Group
Uhde
All rights reserved © Uhde GmbH
Pro. Unit TON Cat. Code Acc. Code Status
Con. Unit Type of Document DH Order No. Scale Tot. Sheets
Drawn 08.04.2005 Hielscher
Prepared 08.04.2005 Hohmann
Checked 08.04.2005 Heuer
Approved 08.04.2005 Heuer
AMMONIA / UREA PROJECT SUEZ II
Designation
Wiring diagram
384K001BM01
Store Location: Server \\p013040\013040-ADA
Store Location: Folder \EI-ET\DH_el-wiring-diag\
Store Name 01-3040_384K001BM01_000_01.dwg
ISO A3
BORDER-A3_013040.dwg / AG03A3_013040.dwg / 17.05.2004

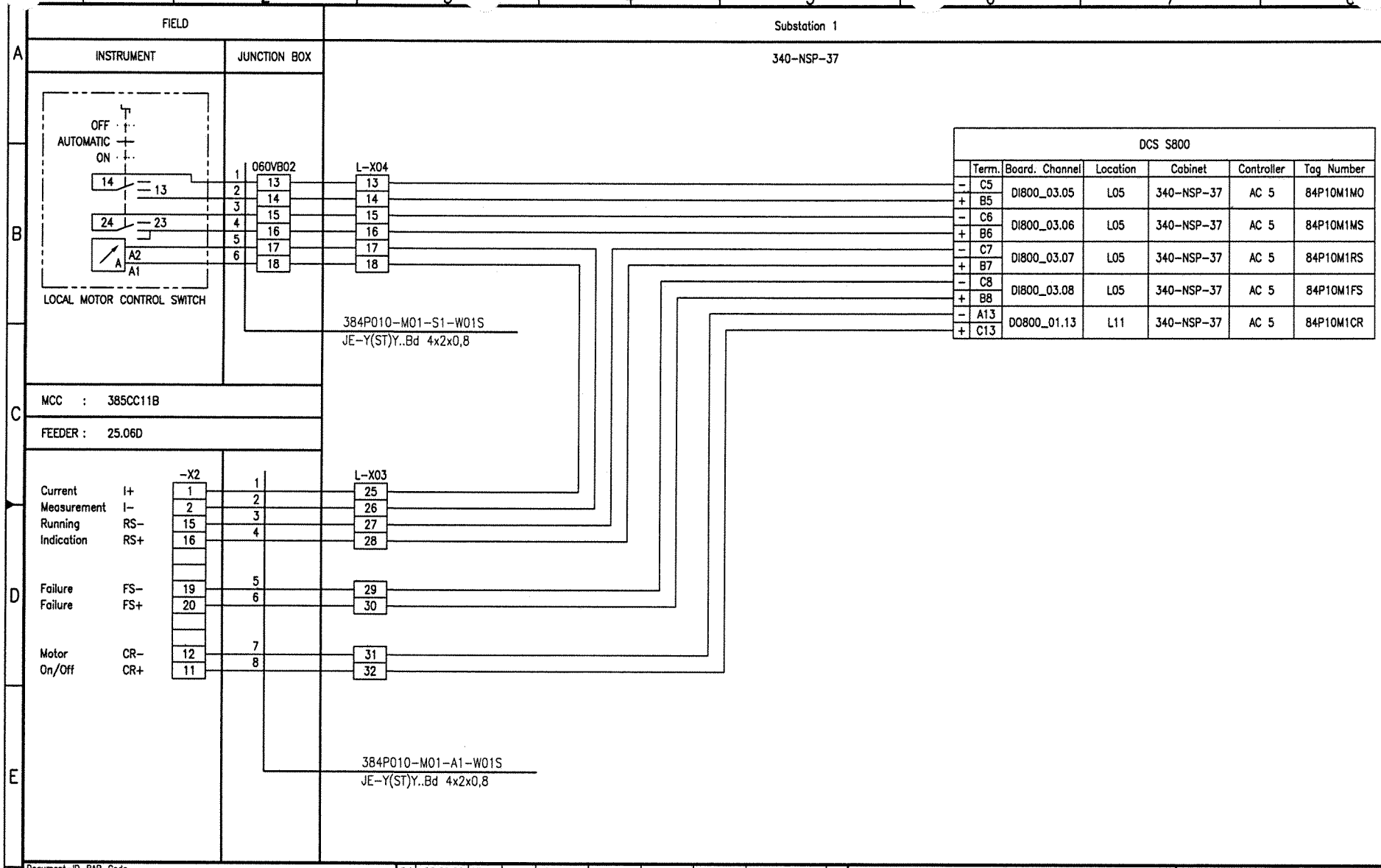

Document-ID-BAR-Code

Rev.	Date	Name (Drawn/Prepared)	Date	Name (Checked)	Date	Name (Approved)	Description	Acc. Code
01	20.09.06	Hie Hie	20.09.06	Heuer	20.09.06	Heuer	AS BUILT	

UAN	Document ID	Part	Rev.	Group
01-3040	UD-EL-G00-FS-0001		01	

Code

Uhde

All rights reserved © Uhde GmbH

Pro. Unit	TON	Cat. Code	Acc. Code	Status
Con. Unit	Type of Document: DH	Order No.	Scale	Tot. Sheets

	Date	Name
Drawn	08.04.2005	Hielscher
Prepared	08.04.2005	Hohmann
Checked	08.04.2005	Heuer
Approved	08.04.2005	Heuer

AMMONIA / UREA PROJECT SUEZ II

Designation
Wiring diagram
384P010-M01

Store Location: Server \\p013040\013040-ADA
Store Location: Folder \EI-ET\DH_el-wiring-diag\
Store Name 01-3040_384P010-M01_000_01.dwg

ISO A3

BORDER-A3_013040.dwg / AG03A3_013040.dwg / 17.05.2004

CONTENTS

Loop Index (S 800 MOTORS) Processunit 385
Electric Power Generation

Tag No.	Rev.	Crossreference: See	Remarks	File No.
385AE11-RM1	00			
385CB11-S1	01			
385CE11	00			
385MT-M01	01			
385MT-M02	01			
385P001AM01	01			
385P001BM01	01			
385U001-EH1	01			
385U001-M01	01			
385U001-M02	01			
385U001-M03	01			

I:\Ei-ETDH_el-wiring-diag\01-3040_Wiring_diagrams_coversheet_01.doc

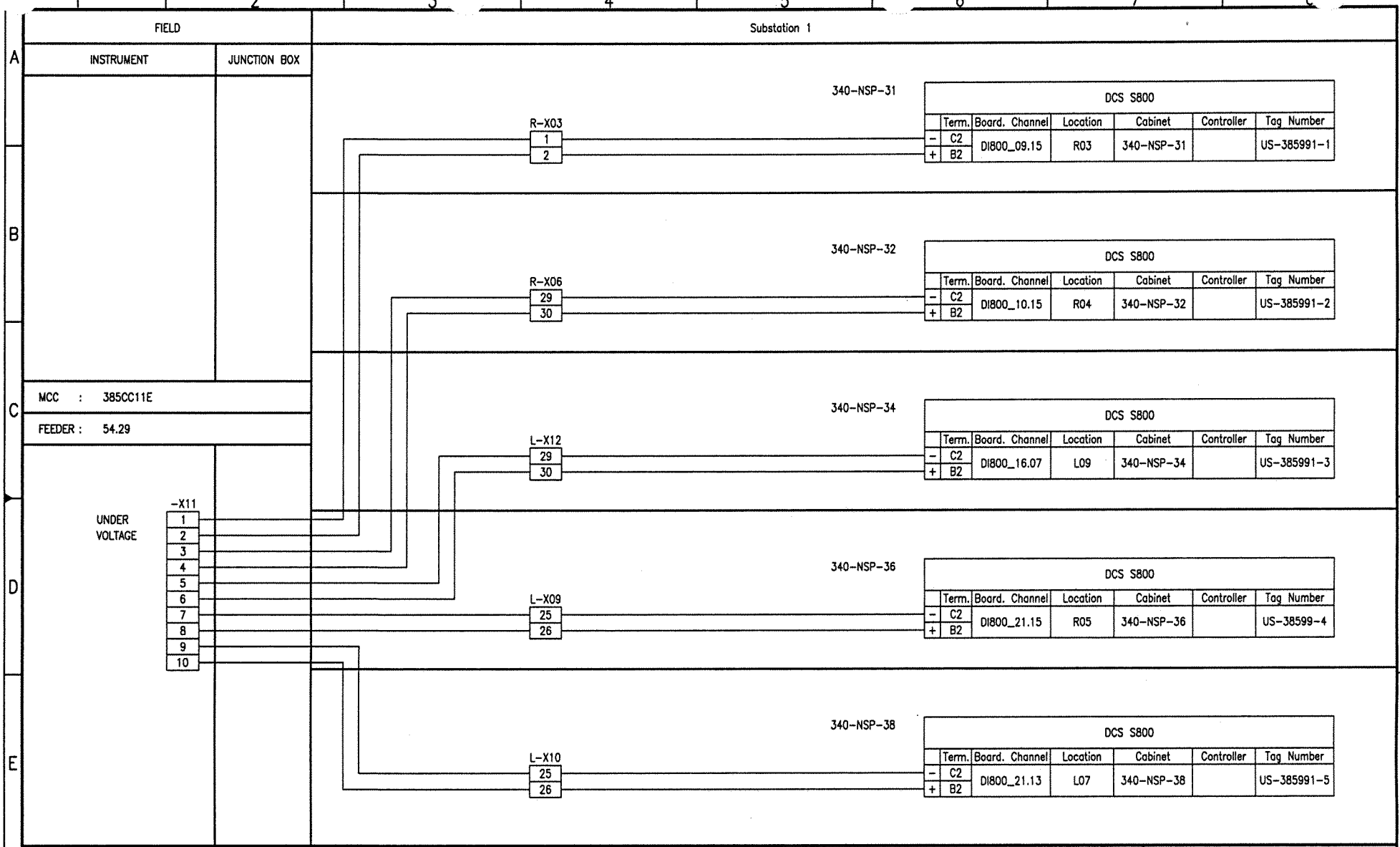

Document-ID-BAR-Code

Rev.	Date	Name	Date	Name	Date	Name	Description	Acc. Code
	Drawn/Prepared		Checked		Approved			

Pro. Unit	TON	Cat. Code	Acc. Code	Status
Con. Unit	Type of Document: DD	Order No.	Scale	Tot. Sheets

	Date	Name
Drawn	20.09.2006	Hielscher
Prepared	20.09.2006	Hielscher
Checked	20.09.2006	Heuer
Approved	20.09.2006	Heuer

UAN	Document ID	Part	Rev.	Group
01-3040	UD-EL-G00-FS-0001	000	00	

Code

Uhde

All rights reserved © Uhde GmbH

AMMONIA / UREA PROJECT SUEZ II

Designation
Wiring diagram
385AE11-RM1

Store Location: Server
\\p013040\013040-ADA

Store Location: Folder
\EI-ET\DH_el-wiring-diag\

Store Name
01-3040_385AE11-RM1_000_00.dwg

FIELD | Substation 1

INSTRUMENT | JUNCTION BOX

340-NSP-33

"SPARE"

MCC : 385CB11

FEEDER : 02 SPARE

		-X09
Current	I+	1
Measurement	I-	2
Running Indication	RS2-	3
Space Heater	RS2+	4
Motor	CR1-	6
On	CR1+	5
Motor	CR2-	8
Off	CR2+	7
Running Indication	RS1-	9
Motor	RS1+	10
Failure	FS-	11
Failure	FS+	13
Power	P+	15
Measurement	P-	16

NO CABLE

R-X09: 25, 26, 27, 28, 29, 30

R-X14: 01, 02, 03, 04, 05, 06, 07, 08, 09, 10, 11, 12, 13, 14

DCS S800

	Term.	Board. Channel	Location	Cabinet	Controller	Tag Number
-	C5	DI800_11.05	R06	340-NSP-33	AC 3	85CB11S1MO
+	B5					
-	C6	DI800_11.06	R06	340-NSP-33	AC 3	85CB11S1MS
+	B6					
+	C10	AI800_03.05	R01	340-NSP-33	AC 3	ET-3859SPAR
-	A10					
-	C7	DI800_11.07	R06	340-NSP-33	AC 3	85CB11S1SHRS
+	B7					
-	A12	DO800_03.12	R09	340-NSP-33	AC 3	85CB11S1CR1
+	C12					
-	A13	DO800_03.13	R09	340-NSP-33	AC 3	85CB11S1CR2
+	C13					
-	C8	DI800_11.08	R06	340-NSP-33	AC 3	85CB11S1RS
+	B8					
-	C9	DI800_11.09	R06	340-NSP-33	AC 3	85CB11S1FS
+	B9					

340-NSP-34 R-X14: 09, 10

X320: 09, 10

Control Building / Rack Room

DCS S100

	Term.	Board. Channel	Location	Cabinet	Controller	Tag Number
-	35	PU02.05	+H331.2	340-NSP-11 Rear	AC 3	85CB11SPAR

Document-ID-BAR-Code

Rev.	Date	Name	Date	Name	Date	Name	Description	Acc. Code
01	20.09.06	Hie	20.09.06	Heuer	20.09.06	Heuer	AS BUILT	
	Drawn/Prepared		Checked		Approved			

UAN	Document ID	Part	Rev.	Group
01-3040	UD-EL-G00-FS-0001		01	

Code

Uhde

All rights reserved © Uhde GmbH

Pro. Unit	TON	Cat. Code	Acc. Code	Status

Con. Unit	Type of Document	Order No.	Scale	Tot. Sheets
	DH			

	Date	Name
Drawn	08.04.2005	Hielscher
Prepared	08.04.2005	Hohmann
Checked	08.04.2005	Heuer
Approved	08.04.2005	Heuer

AMMONIA / UREA PROJECT SUEZ II

Designation: Wiring diagram 385CB11-S1

Store Location: Server \\p013040\013040-ADA

Store Location: Folder \El-ET\DH_el-wiring-diag\

Store Name 01-3040_385CB11-S1_000_01.dwg

ISO A3

BORDER-A3_013040.dwg / AGD3A3_013040.dwg / 17.05.2004

FIELD		Substation 1
INSTRUMENT	JUNCTION BOX	340-NSP-34L

MCC : 385CC11E

FEEDER : 54.29

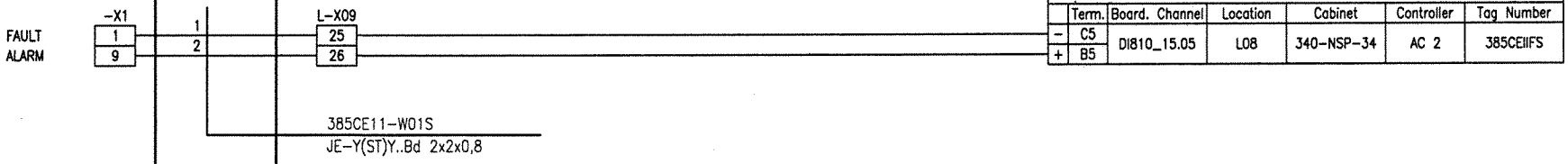

DCS S800						
	Term.	Board. Channel	Location	Cabinet	Controller	Tag Number
-	C5	DI810_15.05	L08	340-NSP-34	AC 2	385CEIIFS
+	B5					

Document-ID-BAR-Code

Rev.	Date	Name	Date	Name	Date	Name	Description	Acc. Code
	Drawn/Prepared		Checked		Approved			

Pro. Unit	TON	Cat. Code	Acc. Code	Status
Con. Unit	Type of Document: DD	Order No.	Scale	Tot. Sheets

Code				
UAN	Document ID	Part	Rev.	Group
01-3040	UD-EL-G00-FS-0001	000	00	

	Date	Name
Drawn	20.09.2006	Hielscher
Prepared	20.09.2006	Hielscher
Checked	20.09.2006	Heuer
Approved	20.09.2006	Heuer

Uhde

All rights reserved © Uhde GmbH

AMMONIA / UREA PROJECT SUEZ II

Designation
Wiring diagram
385AE11-RM1

Store Location: Server \\p013040\013040-ADA

Store Location: Folder \EI-ET\DH_el-wiring-diag\

Store Name 01-3040_385CE11_000_00.dwg

ISO A3

BORDER-A3_013040.dwg / AG03A3_013040.dwg / 17.05.2004

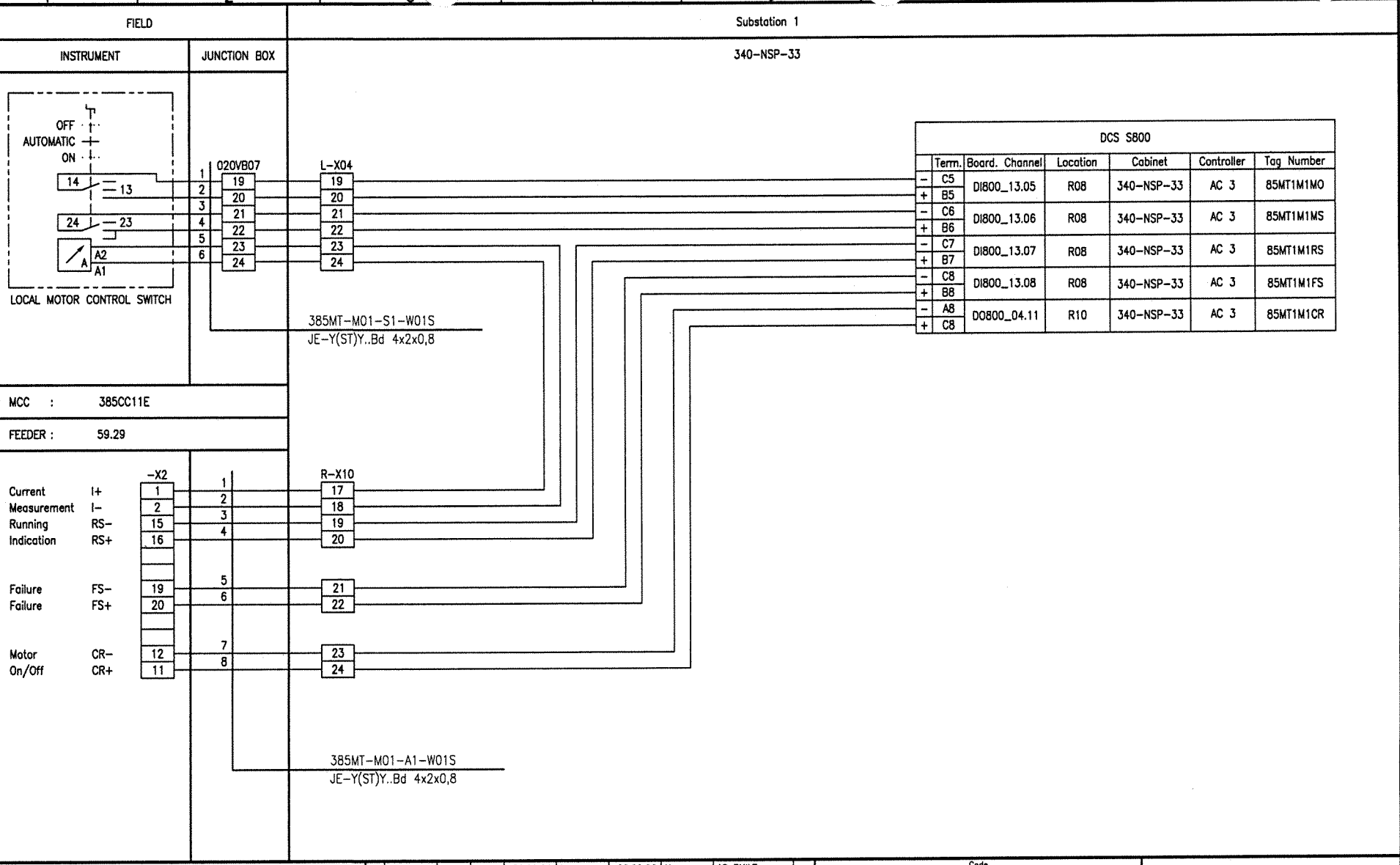

Document-ID-BAR-Code

Rev.	Date	Drawn/Prepared Name	Date	Checked Name	Date	Approved Name	Description	Acc. Code
01	20.09.06	Hie Hie	20.09.06	Heuer	20.09.06	Heuer	AS BUILT	

Pro. Unit	TON	Cat. Code	Acc. Code	Status

Con. Unit	Type of Document	Order No.	Scale	Tot. Sheets
	DH			

	Date	Name
Drawn	08.04.2005	Hielscher
Prepared	08.04.2005	Hohmann
Checked	08.04.2005	Heuer
Approved	08.04.2005	Heuer

Store Location: Server \\p013040\013040-ADA
Store Location: Folder \Ei-ET\DH_el-wiring-diag\
Store Name 01-3040_385MT-M01_000_01.dwg

UAN 01-3040
Code: Document ID UD-EL-G00-FS-0001 | Part | Rev. 01 | Group

Uhde

All rights reserved © Uhde GmbH

AMMONIA / UREA PROJECT SUEZ II

Designation
Wiring diagram
385MT-M01

ISO A3

BORDER-A3_013040.dwg / AG0343_013040.dwg / 17.05.2004

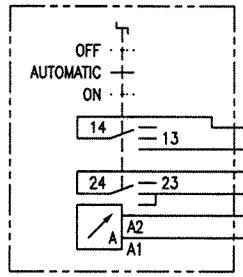

LOCAL MOTOR CONTROL SWITCH

FIELD | Substation 1

INSTRUMENT | JUNCTION BOX | 340-NSP-33

020VB07: 1, 2, 3, 4, 5, 6 — 25, 26, 27, 28, 29, 30

L-X04: 25, 26, 27, 28, 29, 30

385MT-M02-S1-W01S
JE-Y(ST)Y..Bd 4x2x0,8

MCC : 385CC12A

FEEDER : 10.06D

		-X2		R-X13
Current Measurement	I+	1	1	01
	I-	2	2	02
Running Indication	RS-	15	3	03
	RS+	16	4	04
Failure	FS-	19	5	05
Failure	FS+	20	6	06
Motor On/Off	CR-	12	7	07
	CR+	11	8	08

385MT-M02-A1-W01S
JE-Y(ST)Y..Bd 4x2x0,8

DCS S800

	Term.	Board. Channel	Location	Cabinet	Controller	Tag Number
-	C10	DI800_10.10	R05	340-NSP-33	AC 3	85MT1M2MO
+	B10					
-	C11	DI800_10.11	R05	340-NSP-33	AC 3	85MT1M2MS
+	B11					
-	C12	DI800_10.12	R05	340-NSP-33	AC 3	85MT1M2RS
+	B12					
-	C13	DI800_10.13	R05	340-NSP-33	AC 3	85MT1M2FS
+	B13					
-	A11	DO800_03.11	R09	340-NSP-33	AC 3	85MT1M2CR
+	C11					

Document-ID-BAR-Code

Rev.	Date	Name (Drawn/Prepared)	Date	Name (Checked)	Date	Name (Approved)	Description	Acc. Code
01	20.09.06	Hie Hie	20.09.06	Heuer	20.09.06	Heuer	AS BUILT	

UAN	Document ID	Part	Rev.	Group
01-3040	UD-EL-G00-FS-0001		01	

Code

Pro. Unit | TON | Cat. Code | Acc. Code | Status

Con. Unit | Type of Document: DH | Order No. | Scale | Tot. Sheets

	Date	Name
Drawn	08.04.2005	Hielscher
Prepared	08.04.2005	Hohmann
Checked	08.04.2005	Heuer
Approved	08.04.2005	Heuer

AMMONIA / UREA PROJECT SUEZ II

Uhde

All rights reserved © Uhde GmbH

Designation
Wiring diagram
385MT-M02

Store Location: Server \\p013040\013040-ADA
Store Location: Folder \Ei-ET\DH_el-wiring-diag\
Store Name 01-3040_385MT-M02_000_01.dwg

ISO A3

BORDER-A3_013040.dwg / A003A3_013040.dwg / 17.05.2004

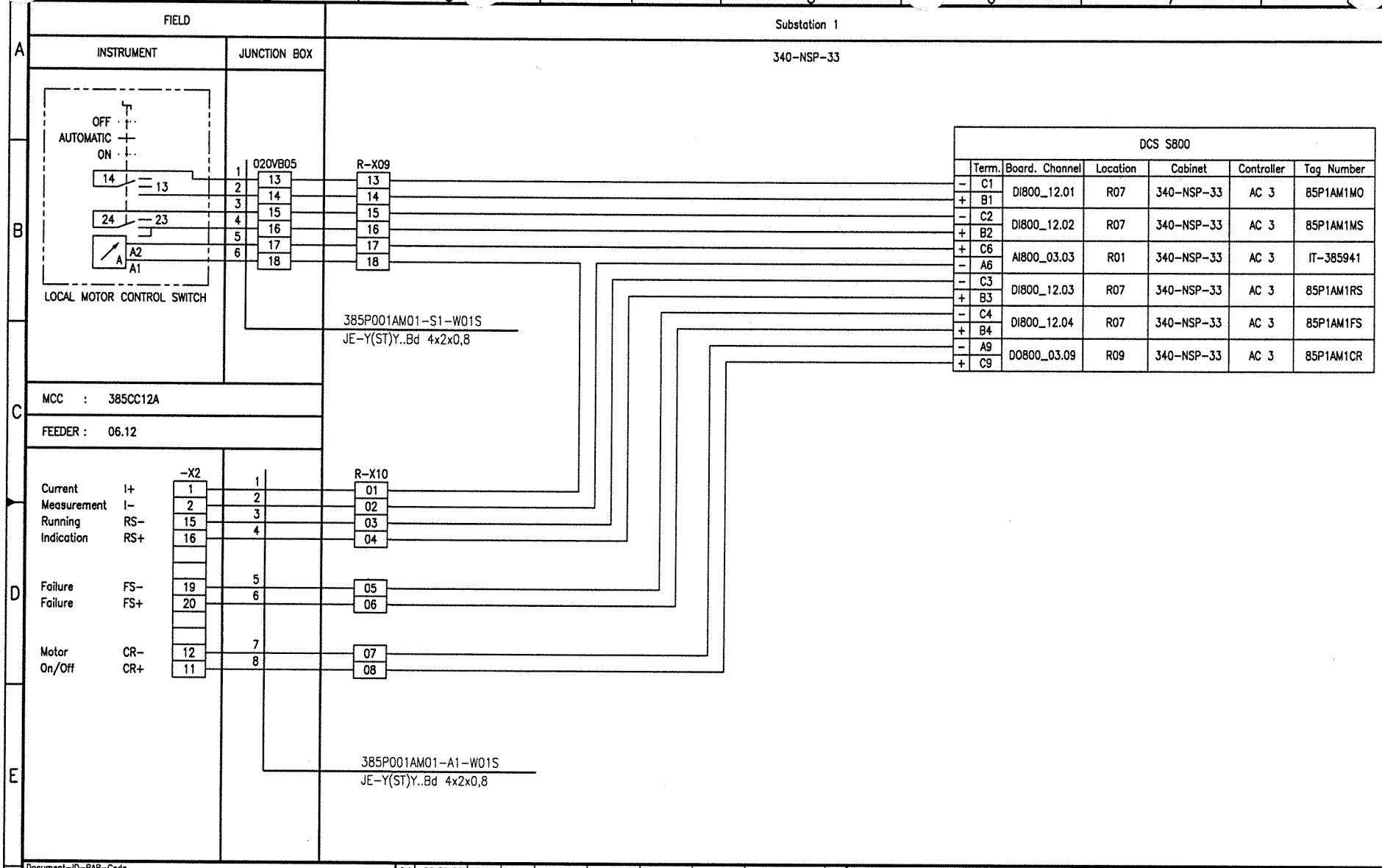

Document-ID-BAR-Code

Rev.	Date	Name (Drawn/Prepared)	Date	Name (Checked)	Date	Name (Approved)	Description	Acc. Code
01	20.09.06	Hie Hie	20.09.06	Heuer	20.09.06	Heuer	AS BUILT	

UAN	Document ID	Part	Rev.	Group
01-3040	UD-EL-G00-FS-0001		01	

Code

Uhde

All rights reserved © Uhde GmbH

Pro. Unit	TON	Cat. Code	Acc. Code	Status
Con. Unit	Type of Document: DH	Order No.	Scale	Tot. Sheets

	Date	Name
Drawn	08.04.2005	Hielscher
Prepared	08.04.2005	Hohmann
Checked	08.04.2005	Heuer
Approved	08.04.2005	Heuer

AMMONIA / UREA PROJECT SUEZ II

Designation
Wiring diagram
385P001AM01

Store Location: Server \\p013040\013040-ADA
Store Location: Folder \EI-ET\DH_el-wiring-diag\
Store Name 01-3040_385P001AM01_000_01.dwg

ISO A3

BORDER-A3_013040.dwg / AG03A3_013040.dwg / 17.05.2004

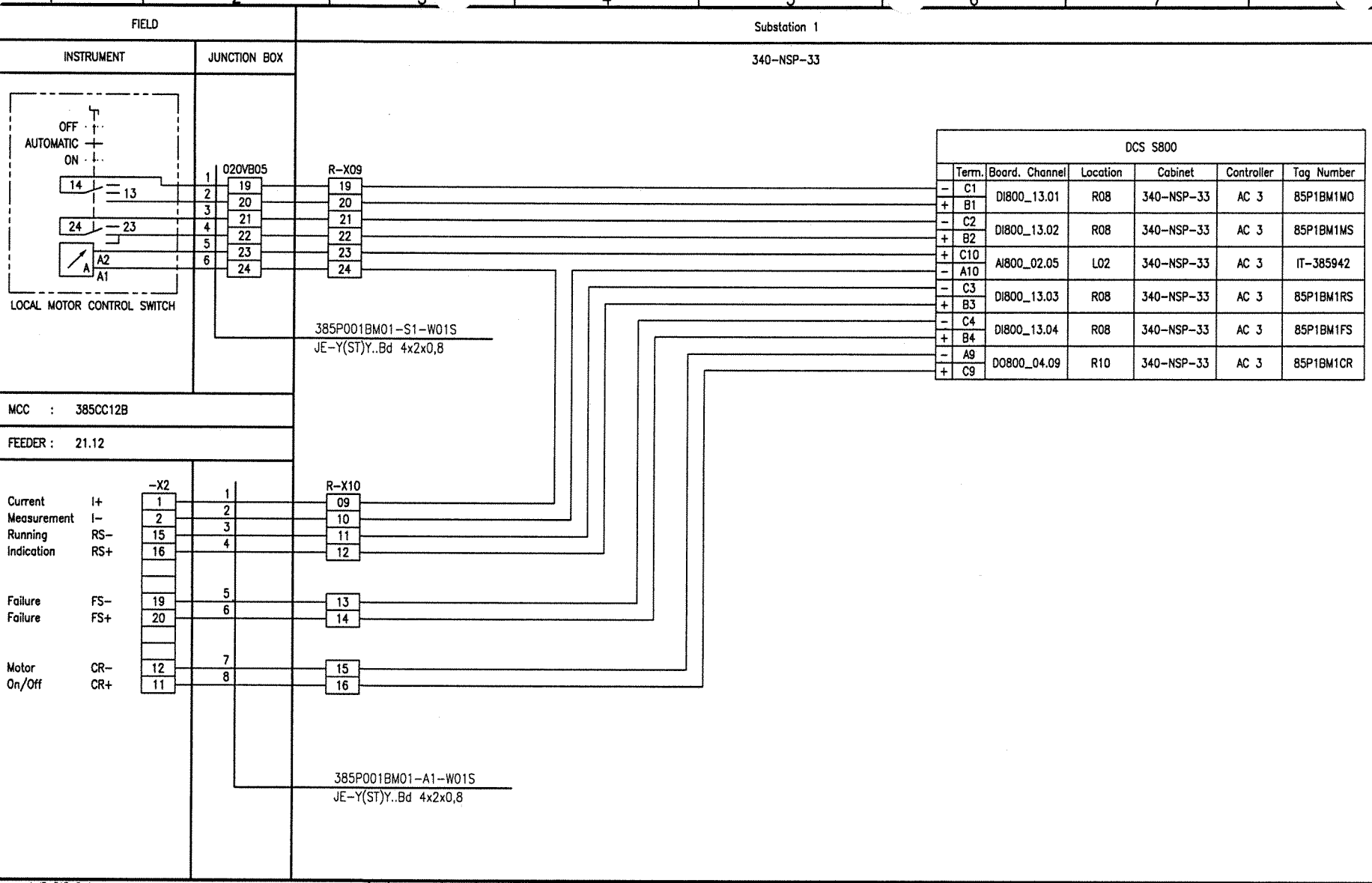

Document-ID-BAR-Code

Rev.	Date	Name (Drawn/Prepared)	Date	Name (Checked)	Date	Name (Approved)	Description	Acc. Code
01	20.09.06	Hie Hie	20.09.06	Heuer	20.09.06	Heuer	AS BUILT	

UAN	Document ID	Part	Rev.	Group
01-3040	UD-EL-G00-FS-0001		01	

Code

Uhde

All rights reserved © Uhde GmbH

Pro. Unit	TON	Cat. Code	Acc. Code	Status
Con. Unit	Type of Document: DH	Order No.	Scale	Tot. Sheets

	Date	Name
Drawn	08.04.2005	Hielscher
Prepared	08.04.2005	Hohmann
Checked	08.04.2005	Heuer
Approved	08.04.2005	Heuer

AMMONIA / UREA PROJECT SUEZ II

Designation
Wiring diagram
385P001BM01

Store Location: Server \\p013040\013040-ADA
Store Location: Folder \Ei-ET\DH_el-wiring-diag\
Store Name 01-3040_385P001BM01_000_01.dwg

ISO A3

FIELD		Substation 1
INSTRUMENT	JUNCTION BOX	340-NSP-33

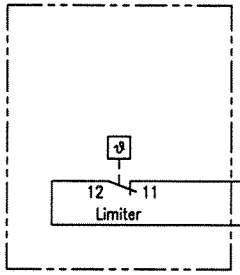

MCC : 385CC12A

FEEDER : 14.08

		-X2
Limiter	LI	4
Limiter	LI	3
Failure	FS-	19
Failure	FS+	20
Heating	CR-	12
Start	CR+	11

	R-X12
1	25
2	26
3	27
4	28

385U001-EH1-A1-W01S
JE-Y(ST)Y..Bd 12x2x0,8

DCS S800

	Term.	Board. Channel	Location	Cabinet	Controller	Tag Number
-	C14	DI800_10.14	R05	340-NSP-33	AC 3	85U1EH1FS
+	B14					
-	A13	DO800_04.13	R10	340-NSP-33	AC 3	85U1EH1CR
+	C13					

Document-ID-BAR-Code

Rev.	Date	Name (Drawn/Prepared)	Date	Name (Checked)	Date	Name (Approved)	Description	Acc. Code
01	20.09.06	Hie Hie	20.09.06	Heuer	20.09.06	Heuer	AS BUILT	

UAN	Document ID	Part	Rev.	Group
01-3040	UD-EL-G00-FS-0001		01	

Code

Pro. Unit	TON	Cat. Code	Acc. Code	Status

Con. Unit	Type of Document	Order No.	Scale	Tot. Sheets
	DH			

	Date	Name
Drawn	08.04.2005	Hielscher
Prepared	08.04.2005	Hohmann
Checked	08.04.2005	Heuer
Approved	08.04.2005	Heuer

AMMONIA / UREA
PROJECT
SUEZ II

Uhde

All rights reserved
© Uhde GmbH

Designation
Wiring diagram
385U001-EH1

Store Location: Server
\\p013040\013040-ADA

Store Location: Folder
\Ei-ET\DH_el-wiring-diag\

Store Name
01-3040_385U001-EH1_000_01.dwg

ISO A3

BORDER-A3_013040.dwg / A0/A3_013040.dwg / 17.05.2004

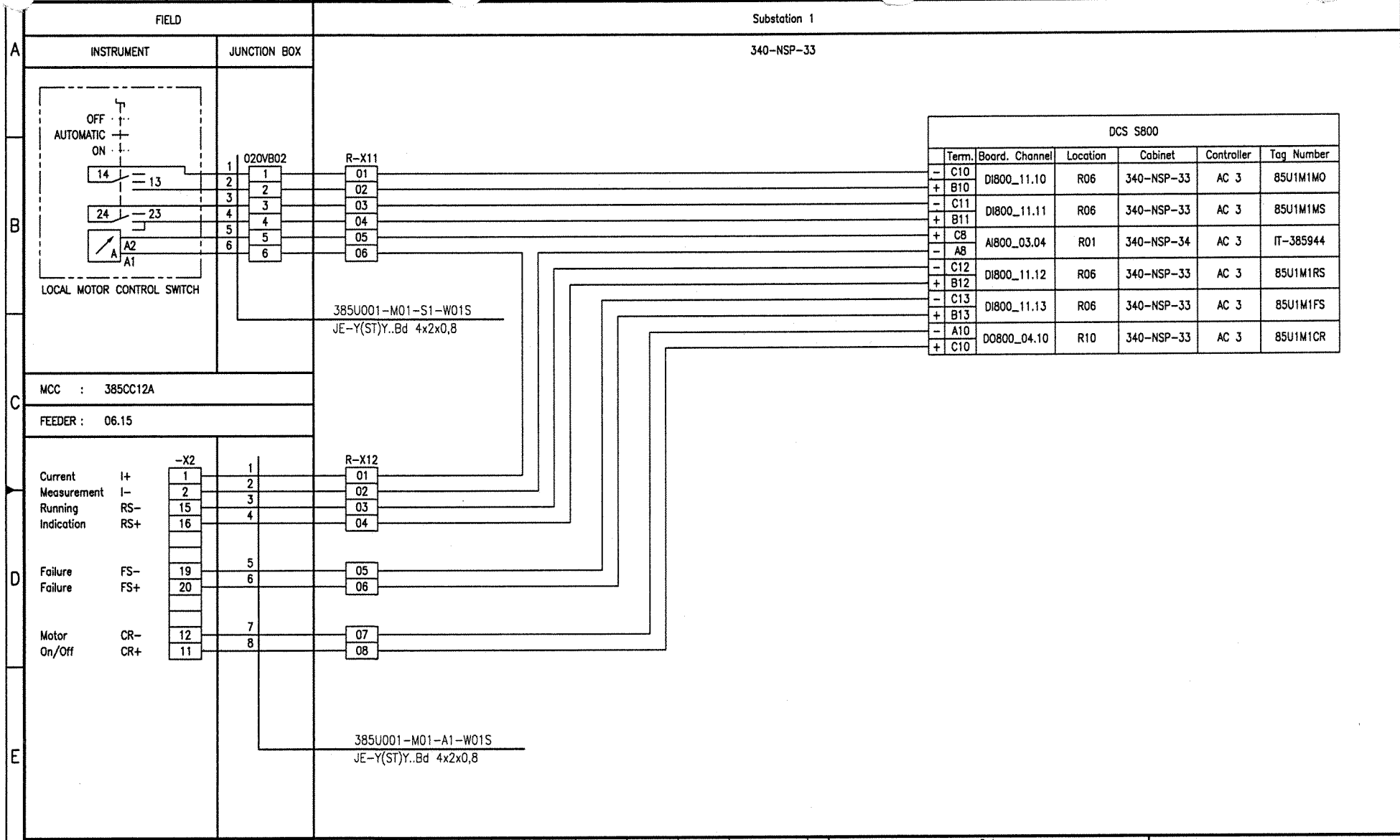

Document-ID-BAR-Code

Rev.	Date	Name (Drawn/Prepared)	Date	Name (Checked)	Date	Name (Approved)	Description	Acc. Code
01	20.09.06	Hie Hie	20.09.06	Heuer	20.09.06	Heuer	AS BUILT	

UAN	Document ID	Part	Rev.	Group
01-3040	UD-EL-G00-FS-0001		01	

Code

Uhde

All rights reserved © Uhde GmbH

Pro. Unit	TON	Cat. Code	Acc. Code	Status
Con. Unit	Type of Document: DH	Order No.	Scale	Tot. Sheets

	Date	Name
Drawn	08.04.2005	Hielscher
Prepared	08.04.2005	Hohmann
Checked	08.04.2005	Heuer
Approved	08.04.2005	Heuer

AMMONIA / UREA PROJECT SUEZ II

Designation
Wiring diagram
385U001-M01

Store Location: Server \\p013040\013040-ADA
Store Location: Folder \EI-ET\DH_el-wiring-diag\
Store Name 01-3040_385U001-M01_000_01.dwg

ISO A3

BORDER-A3_013040.dwg / AG03A3_013040.dwg / 17.05.2004

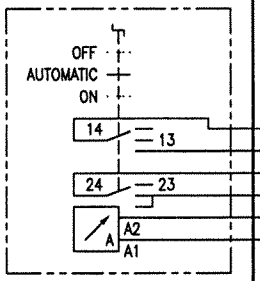

LOCAL MOTOR CONTROL SWITCH

FIELD | Substation 1

INSTRUMENT | JUNCTION BOX | 340-NSP-33

020VB02

R-X11

385U001-M02-S1-W01S
JE-Y(ST)Y..Bd 4x2x0,8

MCC : 385CC12B

FEEDER : 21.15

-X2

R-X12

		-X2	020VB02	R-X12
Current Measurement	I+	1	1	09
	I-	2	2	10
Running Indication	RS-	15	3	11
	RS+	16	4	12
Failure	FS-	19	5	13
Failure	FS+	20	6	14
Motor On/Off	CR-	12	7	15
	CR+	11	8	16

385U001-M02-A1-W01S
JE-Y(ST)Y..Bd 4x2x0,8

DCS S800

	Term.	Board. Channel	Location	Cabinet	Controller	Tag Number
-	C5	DI800_12.05	R07	340-NSP-33	AC 3	85U1M2MO
+	B5					
-	C6	DI800_12.06	R07	340-NSP-33	AC 3	85U1M2MS
+	B6					
+	C12	AI800_02.06	L02	340-NSP-33	AC 3	IT-385943
-	A12					
-	C7	DI800_12.07	R07	340-NSP-33	AC 3	85U1M2RS
+	B7					
-	C8	DI800_12.08	R07	340-NSP-33	AC 3	85U1M2FS
+	B8					
-	A10	DO800_03.10	R09	340-NSP-33	AC 3	85U1M2CR
+	C10					

Document-ID-BAR-Code

Rev.	Date	Name (Drawn/Prepared)	Date	Name (Checked)	Date	Name (Approved)	Description	Acc. Code
01	20.09.06	Hie Hie	20.09.06	Heuer	20.09.06	Heuer	AS BUILT	

UAN	Document ID	Part	Rev.	Group
01-3040	UD-EL-G00-FS-0001		01	

Code

Uhde

All rights reserved © Uhde GmbH

Pro. Unit	TON	Cat. Code	Acc. Code	Status
Con. Unit	Type of Document: DH	Order No.	Scale	Tot. Sheets

	Date	Name
Drawn	08.04.2005	Hielscher
Prepared	08.04.2005	Hohmann
Checked	08.04.2005	Heuer
Approved	08.04.2005	Heuer

AMMONIA / UREA PROJECT SUEZ II

Designation
Wiring diagram
385U001-M02

Store Location: Server \\p013040\013040-ADA
Store Location: Folder \EI-ET\DH_el-wiring-diag\
Store Name 01-3040_385U001-M02_000_01.dwg

ISO A3

BORDER-A3_013040.dwg / A3GA3_013040.dwg / 17.05.2004

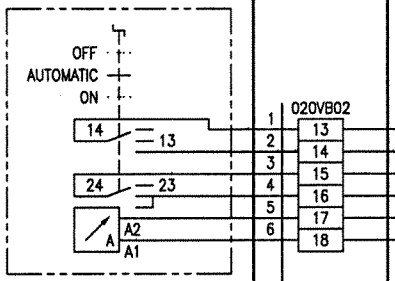

FIELD | Substation 1

INSTRUMENT | JUNCTION BOX | 340-NSP-33

DCS S800

	Term.	Board. Channel	Location	Cabinet	Controller	Tag Number
-	C9	DI800_12.09	R07	340-NSP-33	AC 3	85U1M3MO
+	B9					
-	C10	DI800_12.10	R07	340-NSP-33	AC 3	85U1M3MS
+	B10					
-	C11	DI800_12.11	R07	340-NSP-33	AC 3	85U1M3RS
+	B11					
-	C12	DI800_12.12	R07	340-NSP-33	AC 3	85U1M3FS
+	B12					
-	A12	DO800_04.12	R10	340-NSP-33	AC 3	85U1M3CR
+	C12					

Rev.	Date	Name	Date	Name	Date	Name	Description	Acc. Code
01	20.09.06	Hie	20.09.06	Heuer	20.09.06	Heuer	AS BUILT	
	Drawn/Prepared	Hie	Checked	Heuer	Approved	Heuer		

Document-ID-BAR-Code

UAN	Document ID	Part	Rev.	Group
01-3040	UD-EL-G00-FS-0001		01	

Code

Uhde

All rights reserved © Uhde GmbH

Pro. Unit	TON	Cat. Code	Acc. Code	Status

Con. Unit	Type of Document	Order No.	Scale	Tot. Sheets
	DH			

	Date	Name
Drawn	08.04.2005	Hielscher
Prepared	08.04.2005	Hohmann
Checked	08.04.2005	Heuer
Approved	08.04.2005	Heuer

AMMONIA / UREA PROJECT SUEZ II

Designation
Wiring diagram
385U001-M03

Store Location: Server \\p013040\013040-ADA
Store Location: Folder \Ei-ET\DH_el-wiring-diag\
Store Name 01-3040_385U001-M03_000_01.dwg

ISO A3

BORDER-A3_013040.dwg / AG0343_013040.dwg / 17.05.2004

CONTENTS

Loop Index (S 800 MOTORS) Processunit 386
Nitrogen Storage

Tag No.	Rev.	Crossreference: See	Remarks	File No.
386K001-M01	02			

I:\EL-ET\DH_el-wiring-diag\01-3040_Wiring_diagrams_coversheet_01.doc

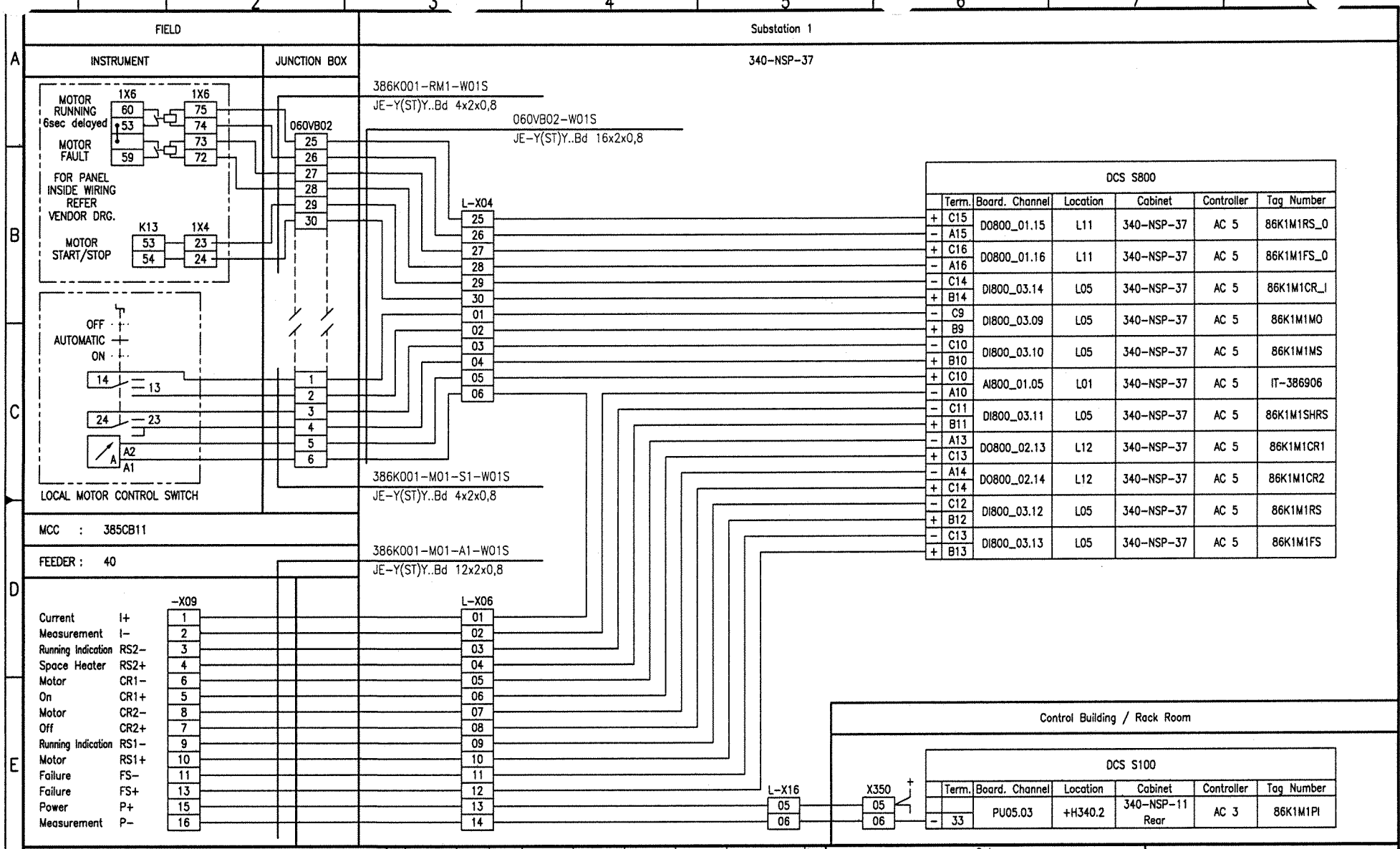

DCS S800

	Term.	Board. Channel	Location	Cabinet	Controller	Tag Number
+	C15	D0800_01.15	L11	340-NSP-37	AC 5	86K1M1RS_O
-	A15					
+	C16	D0800_01.16	L11	340-NSP-37	AC 5	86K1M1FS_O
-	A16					
-	C14	DI800_03.14	L05	340-NSP-37	AC 5	86K1M1CR_I
+	B14					
-	C9	DI800_03.09	L05	340-NSP-37	AC 5	86K1M1MO
+	B9					
-	C10	DI800_03.10	L05	340-NSP-37	AC 5	86K1M1MS
+	B10					
+	C10	AI800_01.05	L01	340-NSP-37	AC 5	IT-386906
-	A10					
-	C11	DI800_03.11	L05	340-NSP-37	AC 5	86K1M1SHRS
+	B11					
-	A13	DO800_02.13	L12	340-NSP-37	AC 5	86K1M1CR1
+	C13					
-	A14	DO800_02.14	L12	340-NSP-37	AC 5	86K1M1CR2
+	C14					
-	C12	DI800_03.12	L05	340-NSP-37	AC 5	86K1M1RS
+	B12					
-	C13	DI800_03.13	L05	340-NSP-37	AC 5	86K1M1FS
+	B13					

DCS S100

	Term.	Board. Channel	Location	Cabinet	Controller	Tag Number
-	33	PU05.03	+H340.2	340-NSP-11 Rear	AC 3	86K1M1PI

Document-ID-BAR-Code

Rev.	Date	Name	Date	Name	Date	Name	Description	Acc. Code
02	20.09.06	Hie	20.09.06	Heuer	20.09.06	Heuer	AS BUILT	
	Drawn/Prepared		Checked		Approved			

UAN	Document ID	Part	Rev.	Group
01-3040	UD-EL-G00-FS-0001		02	

Code

Uhde

All rights reserved © Uhde GmbH

Pro. Unit	TON	Cat. Code	Acc. Code	Status

Con. Unit	Type of Document	Order No.	Scale	Tot. Sheets
	DD			

	Date	Name
Drawn	08.04.2005	Hielscher
Prepared	08.04.2005	Hohmann
Checked	08.04.2005	Heuer
Approved	08.04.2005	Heuer

AMMONIA / UREA PROJECT SUEZ II

Designation
Wiring diagram
386K001-M01

Store Location: Server
\\p013040\013040-ADA

Store Location: Folder
\EI-ET\DH_el-wiring-diag\

Store Name
01-3040_386K001-M01_000_02.dwg

BORDER-A3_013040.dwg / A0G3A3_013040.dwg / 17.05.2004

ISO A3

CONTENTS

Loop Index (S 800 MOTORS) Processunit 388
Cooling Water System

Tag No.	Rev.	Crossreference: See	Remarks	File No.
388HV611-M01	01			
388HV612-M01	01			
388HV613-M01	01			
388HV621-M01	01			
388HV622-M01	01			
388HV623-M01	01			
388K001AM01	01			
388K001BM01	01			
388K001CM01	01			
388K002AM01	01			
388K002BM01	01			
388K002CM01	01			
388K002DM01	01			
388K002EM01	01			
388K002FM01	01			
388K003AM01	01			
388K003BM01	01			
388P001AM01	01			
388P001BM01	01			
388P001CM01	01			
388P002AM01	01			
388P002BM01	01			
388P002CM01	01			
388P003-M01	01			
388P004-M01	01			
388P005AM01	01			
388P005BM01	01			
388P006AM01	01			
388P006BM01	01			
388P007AM01	01			
388P007BM01	01			
388P009AM01	01			
388P009BM01	01			
388P014AM01	01			
388P014BM01	01			

I:\Ei-ET\DH_el-wiring-diag\01-3040_Wiring_diagrams_coversheet_01.doc

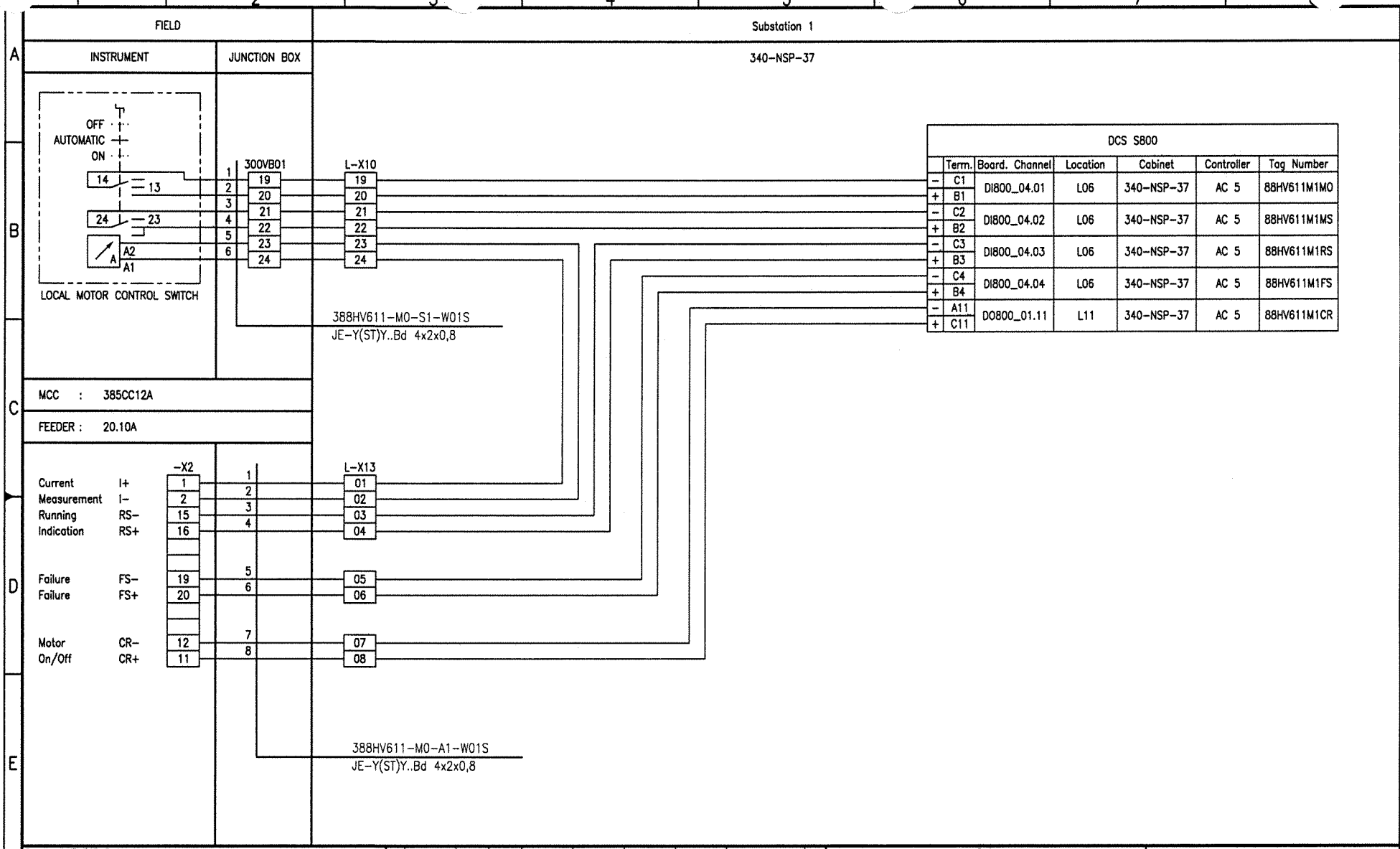

Document-ID-BAR-Code

Rev.	Date	Name	Date	Name	Date	Name	Description	Acc. Code
01	20.09.06	Hie	20.09.06	Heuer	20.09.06	Heuer	AS BUILT	
	Drawn/Prepared		Checked		Approved			

UAN	Document ID	Part	Rev.	Group
01-3040	UD-EL-G00-FS-0001		01	

Code

Uhde

All rights reserved © Uhde GmbH

Pro. Unit	TON	Cat. Code	Acc. Code	Status

Con. Unit	Type of Document	Order No.	Scale	Tot. Sheets
	DH			

	Date	Name
Drawn	08.04.2005	Hielscher
Prepared	08.04.2005	Hohmann
Checked	08.04.2005	Heuer
Approved	08.04.2005	Heuer

AMMONIA / UREA PROJECT SUEZ II

Designation
Wiring diagram
388HV611-M01

Store Location: Server
\\p013040\013040-ADA

Store Location: Folder
\EI-ET\DH_el-wiring-diag\

Store Name
01-3040_388HV611-M01_000_01.dwg

ISO A3

BORDER-A3_013040.dwg / A013A3_013040.dwg / 17.05.2004

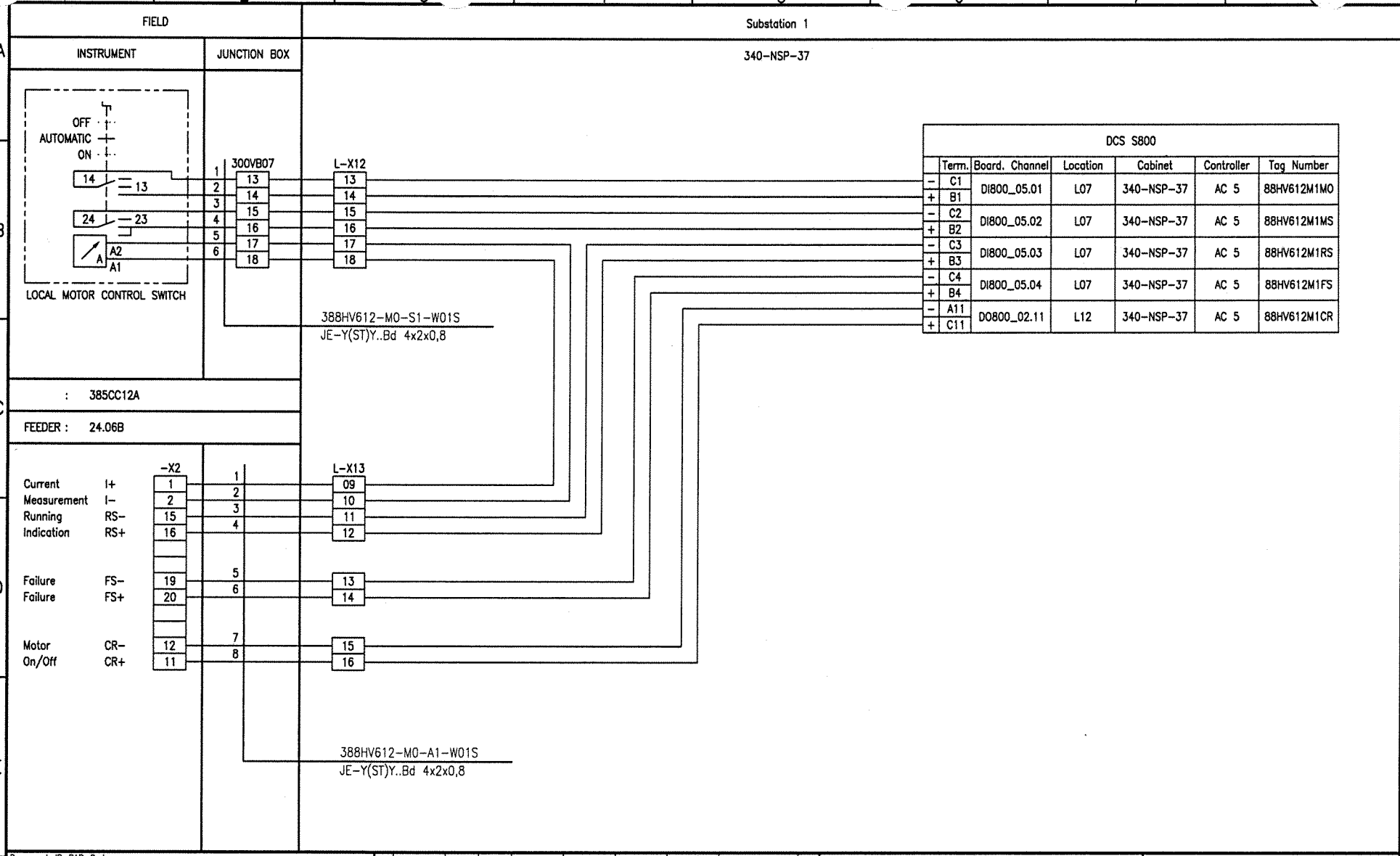

Document-ID-BAR-Code

Rev.	Date	Name	Date	Name	Date	Name	Description	Acc. Code
01	20.09.06	Hie	20.09.06	Heuer	20.09.06	Heuer	AS BUILT	
	Drawn/Prepared		Checked		Approved			

UAN	Code: Document ID	Part	Rev.	Group
01-3040	UD-EL-G00-FS-0001		01	

Uhde

All rights reserved © Uhde GmbH

Pro. Unit	TON	Cat. Code	Acc. Code	Status

Con. Unit	Type of Document	Order No.	Scale	Tot. Sheets
	DH			

	Date	Name
Drawn	08.04.2005	Hielscher
Prepared	08.04.2005	Hohmann
Checked	08.04.2005	Heuer
Approved	08.04.2005	Heuer

AMMONIA / UREA PROJECT SUEZ II

Designation
Wiring diagram
388HV612-M01

Store Location: Server
\\p013040\013040-ADA

Store Location: Folder
\Ei-ET\DH_el-wiring-diag\

Store Name
01-3040_388HV612-M01_000_01.dwg

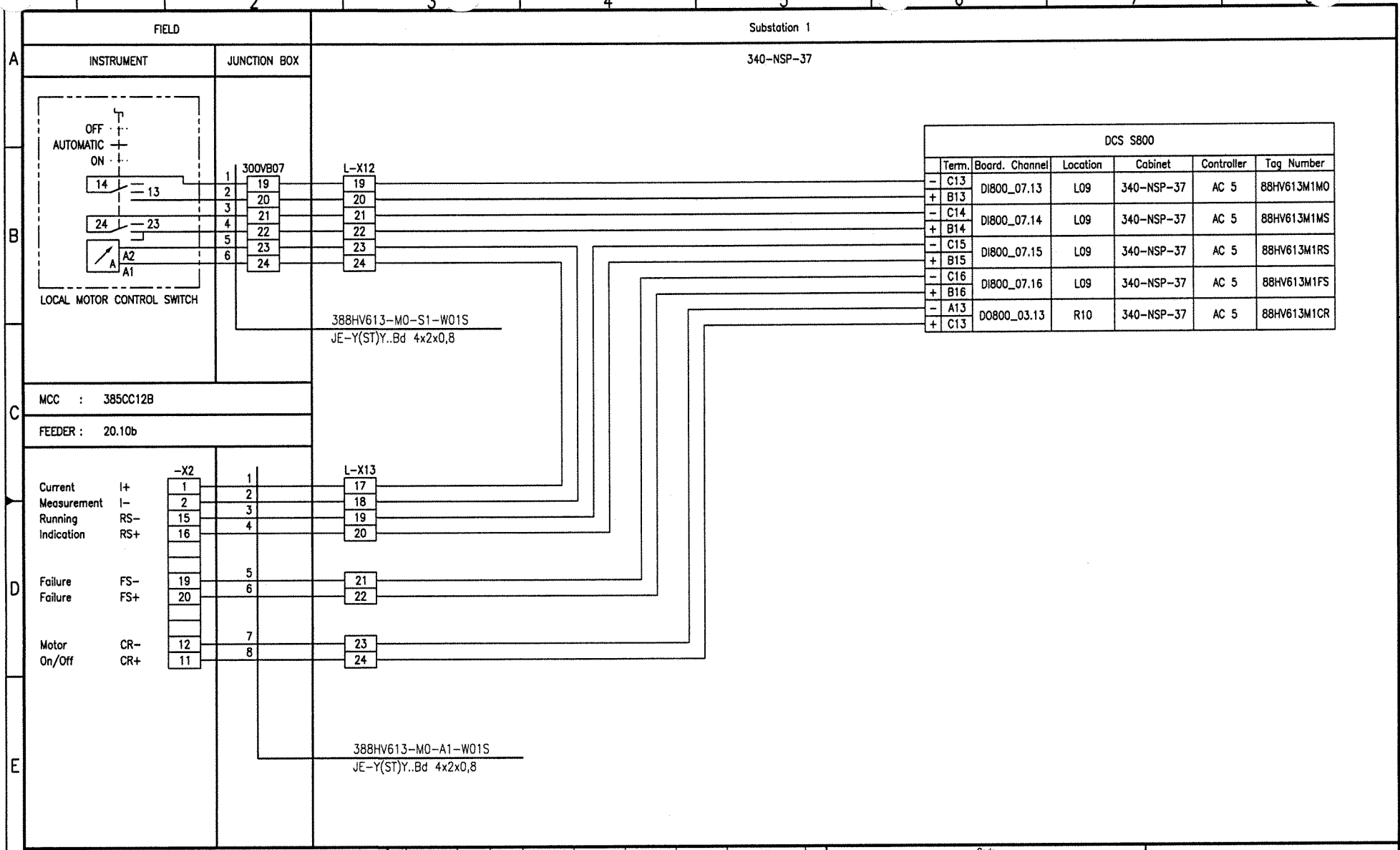

Document-ID-BAR-Code

Rev.	Date	Drawn/Prepared Name	Date	Checked Name	Date	Approved Name	Description	Acc. Code
01	20.09.06	Hie Hie	20.09.06	Heuer	20.09.06	Heuer	AS BUILT	

UAN	Code: Document ID	Part	Rev.	Group
01-3040	UD-EL-G00-FS-0001		01	

Uhde

All rights reserved © Uhde GmbH

Pro. Unit	TON	Cat. Code	Acc. Code	Status
Con. Unit	Type of Document: DH	Order No.	Scale	Tot. Sheets

	Date	Name
Drawn	08.04.2005	Hielscher
Prepared	08.04.2005	Hohmann
Checked	08.04.2005	Heuer
Approved	08.04.2005	Heuer

AMMONIA / UREA PROJECT SUEZ II

Designation
Wiring diagram
388HV613-M01

Store Location: Server \\p013040\013040-ADA
Store Location: Folder \Ei-ET\DH_el-wiring-diag\
Store Name 01-3040_388HV613-M01_000_01.dwg

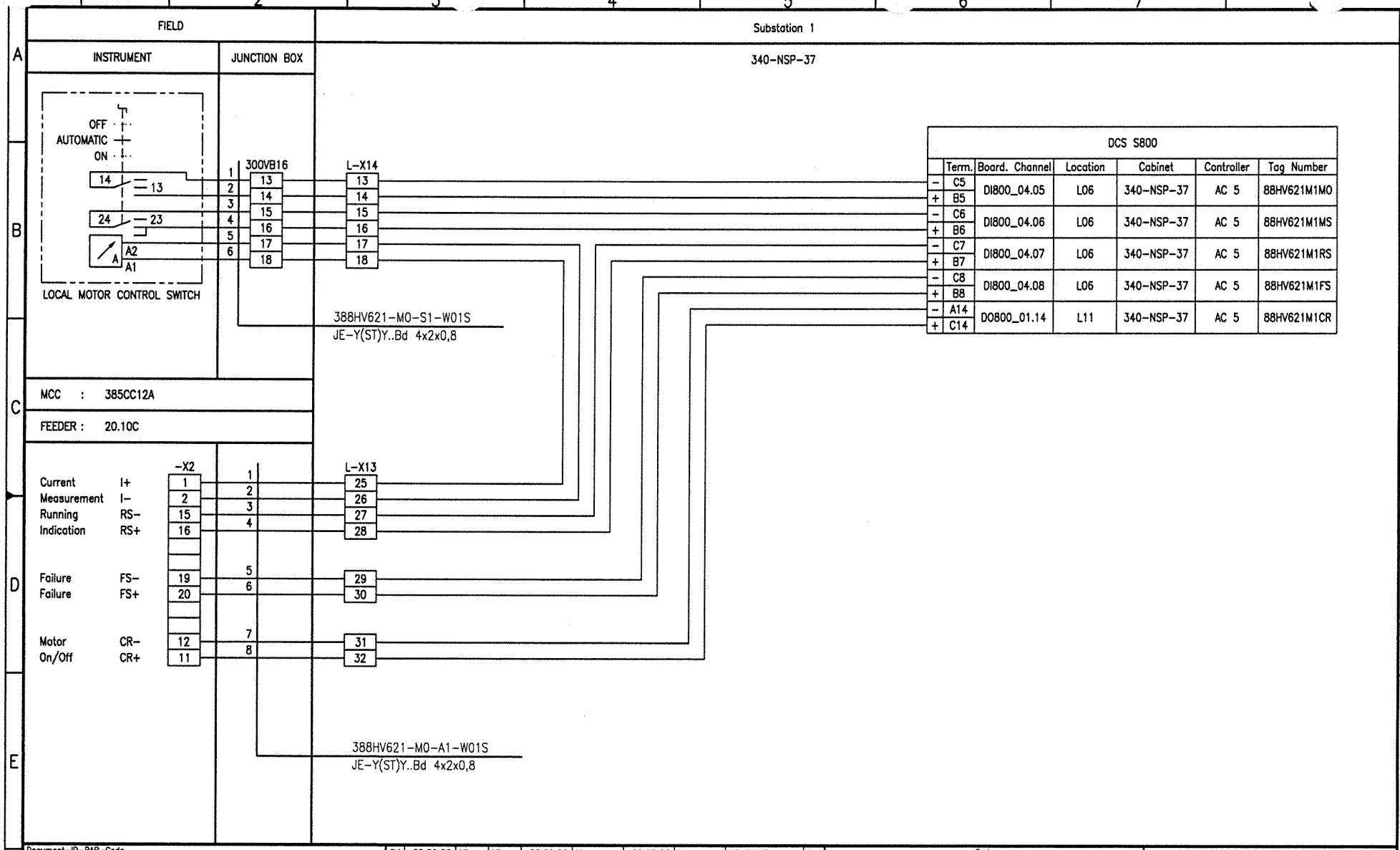

Document-ID-BAR-Code

Rev.	Date	Name (Drawn/Prepared)	Date	Name (Checked)	Date	Name (Approved)	Description	Acc. Code
01	20.09.06	Hie Hie	20.09.06	Heuer	20.09.06	Heuer	AS BUILT	

UAN	Document ID	Part	Rev.	Group
01-3040	UD-EL-G00-FS-0001		01	

Code

Uhde

All rights reserved © Uhde GmbH

Pro. Unit	TON	Cat. Code	Acc. Code	Status
Con. Unit	Type of Document: DH	Order No.	Scale	Tot. Sheets

	Date	Name
Drawn	08.04.2005	Hielscher
Prepared	08.04.2005	Hohmann
Checked	08.04.2005	Heuer
Approved	08.04.2005	Heuer

AMMONIA / UREA PROJECT SUEZ II

Designation
Wiring diagram
388HV621-M01

Store Location: Server \\p013040\013040-ADA
Store Location: Folder \EI-ET\DH_el-wiring-diag\
Store Name 01-3040_388HV621-M01_000_01.dwg

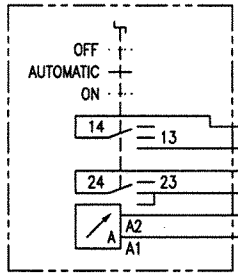

FIELD | Substation 1

INSTRUMENT | JUNCTION BOX | 340-NSP-37

300VB16: 1, 2, 3, 4, 5, 6 — 19, 20, 21, 22, 23, 24

L-X14: 19, 20, 21, 22, 23, 24

388HV622-M0-S1-W01S
JE-Y(ST)Y..Bd 4x2x0,8

MCC : 385CC12B

FEEDER : 24.06B

-X2

		-X2	300VB16	L-X15
Current Measurement	I+	1	1	01
	I-	2	2	02
Running Indication	RS-	15	3	03
	RS+	16	4	04
Failure	FS-	19	5	05
Failure	FS+	20	6	06
Motor On/Off	CR-	12	7	07
	CR+	11	8	08

L-X15: 01, 02, 03, 04, 05, 06, 07, 08

388HV622-M0-A1-W01S
JE-Y(ST)Y..Bd 4x2x0,8

DCS S800

	Term.	Board. Channel	Location	Cabinet	Controller	Tag Number
-	C5	DI800_05.05	L07	340-NSP-37	AC 5	88HV622M1MO
+	B5					
-	C6	DI800_05.06	L07	340-NSP-37	AC 5	88HV622M1MS
+	B6					
-	C7	DI800_05.07	L07	340-NSP-37	AC 5	88HV622M1RS
+	B7					
-	C8	DI800_05.08	L07	340-NSP-37	AC 5	88HV622M1FS
+	B8					
-	A12	DO800_02.12	L12	340-NSP-37	AC 5	88HV622M1CR
+	C12					

Document-ID-BAR-Code

Rev.	Date	Name (Drawn/Prepared)	Date	Name (Checked)	Date	Name (Approved)	Description	Acc. Code
01	20.09.06	Hie / Hie	20.09.06	Heuer	20.09.06	Heuer	AS BUILT	

UAN	Document ID	Part	Rev.	Group
01-3040	UD-EL-G00-FS-0001		01	

Code

Uhde

All rights reserved © Uhde GmbH

Pro. Unit	TON	Cat. Code	Acc. Code	Status

Con. Unit	Type of Document	Order No.	Scale	Tot. Sheets
	DH			

	Date	Name
Drawn	08.04.2005	Hielscher
Prepared	08.04.2005	Hohmann
Checked	08.04.2005	Heuer
Approved	08.04.2005	Heuer

AMMONIA / UREA
PROJECT
SUEZ II

Designation
Wiring diagram
388HV622-M01

Store Location: Server
\\p013040\013040-ADA

Store Location: Folder
\EI-ET\DH_el-wiring-diag\

Store Name
01-3040_388HV622-M01_000_01.dwg

ISO A3

BORDER-A3_013040.dwg / A03A3_013040.dwg / 17.05.2004

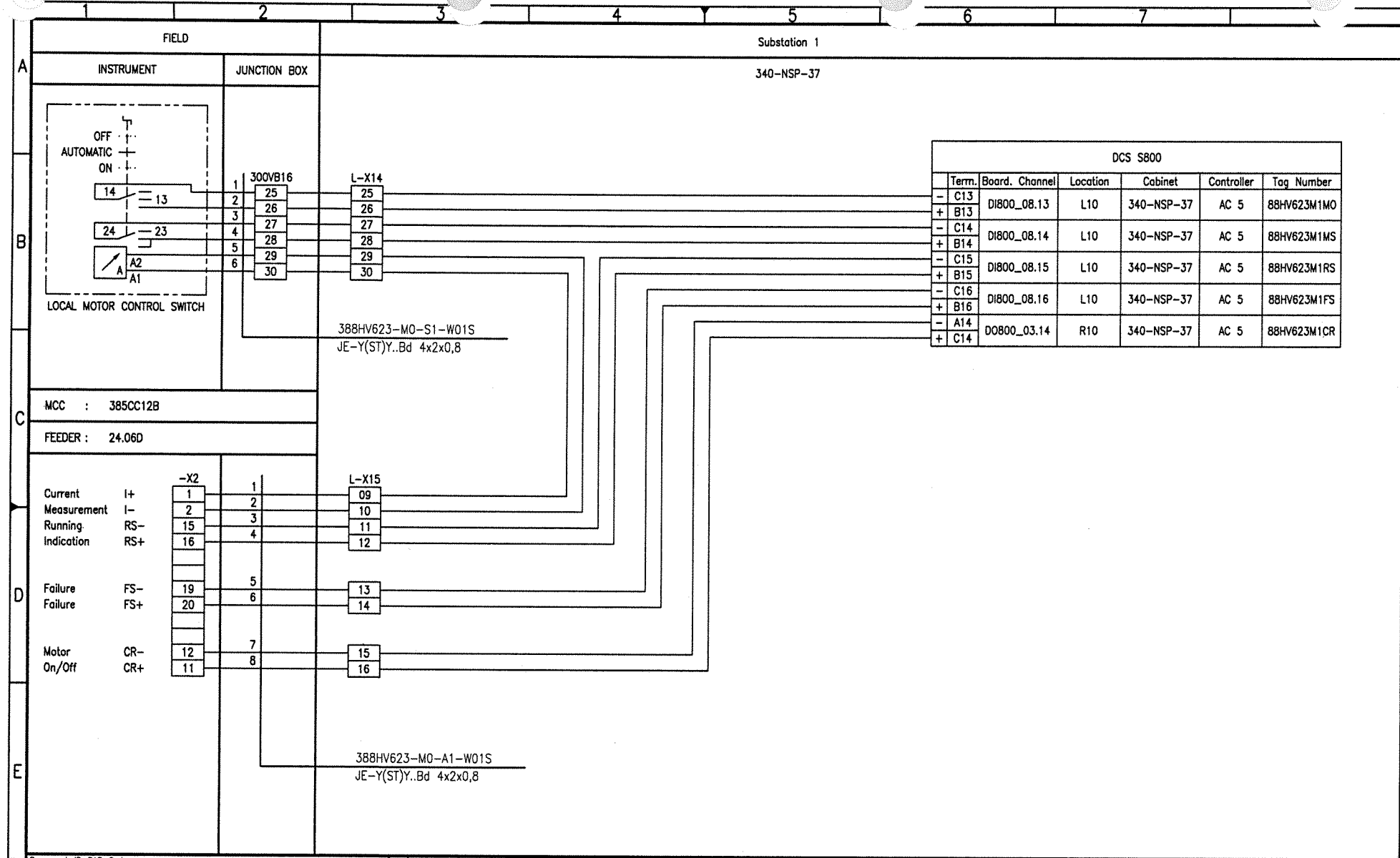
FIELD
Substation 1
INSTRUMENT
JUNCTION BOX
340-NSP-37
OFF
AUTOMATIC
ON
14
13
24
23
A
A2
A1
LOCAL MOTOR CONTROL SWITCH
300VB16
L-X14
25
26
27
28
29
30
388HV623-M0-S1-W01S
JE-Y(ST)Y..Bd 4x2x0,8
MCC : 385CC12B
FEEDER : 24.06D
-X2
L-X15
Current Measurement I+ I-
Running Indication RS- RS+
Failure FS- FS+
Motor On/Off CR- CR+
1 2 15 16 19 20 12 11
09 10 11 12 13 14 15 16
388HV623-M0-A1-W01S
JE-Y(ST)Y..Bd 4x2x0,8
DCS S800
Term. Board. Channel Location Cabinet Controller Tag Number
C13 B13 DI800_08.13 L10 340-NSP-37 AC 5 88HV623M1MO
C14 B14 DI800_08.14 L10 340-NSP-37 AC 5 88HV623M1MS
C15 B15 DI800_08.15 L10 340-NSP-37 AC 5 88HV623M1RS
C16 B16 DI800_08.16 L10 340-NSP-37 AC 5 88HV623M1FS
A14 C14 DO800_03.14 R10 340-NSP-37 AC 5 88HV623M1CR
BORDER-A3_013040.dwg / AG03A3_013040.dwg / 17.05.2004
Document-ID-BAR-Code
01 20.09.06 Hie Hie 20.09.06 Heuer 20.09.06 Heuer AS BUILT
Rev. Date Name Date Name Date Name Description Acc. Code
Drawn/Prepared Checked Approved
UAN 01-3040
Code Document ID UD-EL-G00-FS-0001 Part Rev. 01 Group
Uhde
All rights reserved © Uhde GmbH
Pro. Unit TON Cat. Code Acc. Code Status
Con. Unit Type of Document DH Order No. Scale Tot. Sheets
Drawn 08.04.2005 Hielscher
Prepared 08.04.2005 Hohmann
Checked 08.04.2005 Heuer
Approved 08.04.2005 Heuer
AMMONIA / UREA PROJECT SUEZ II
Designation
Wiring diagram 388HV623-M01
Store Location: Server \\p013040\013040-ADA
Store Location: Folder \EI-ET\DH_el-wiring-diag\
Store Name 01-3040_388HV623-M01_000_01.dwg
ISO A3

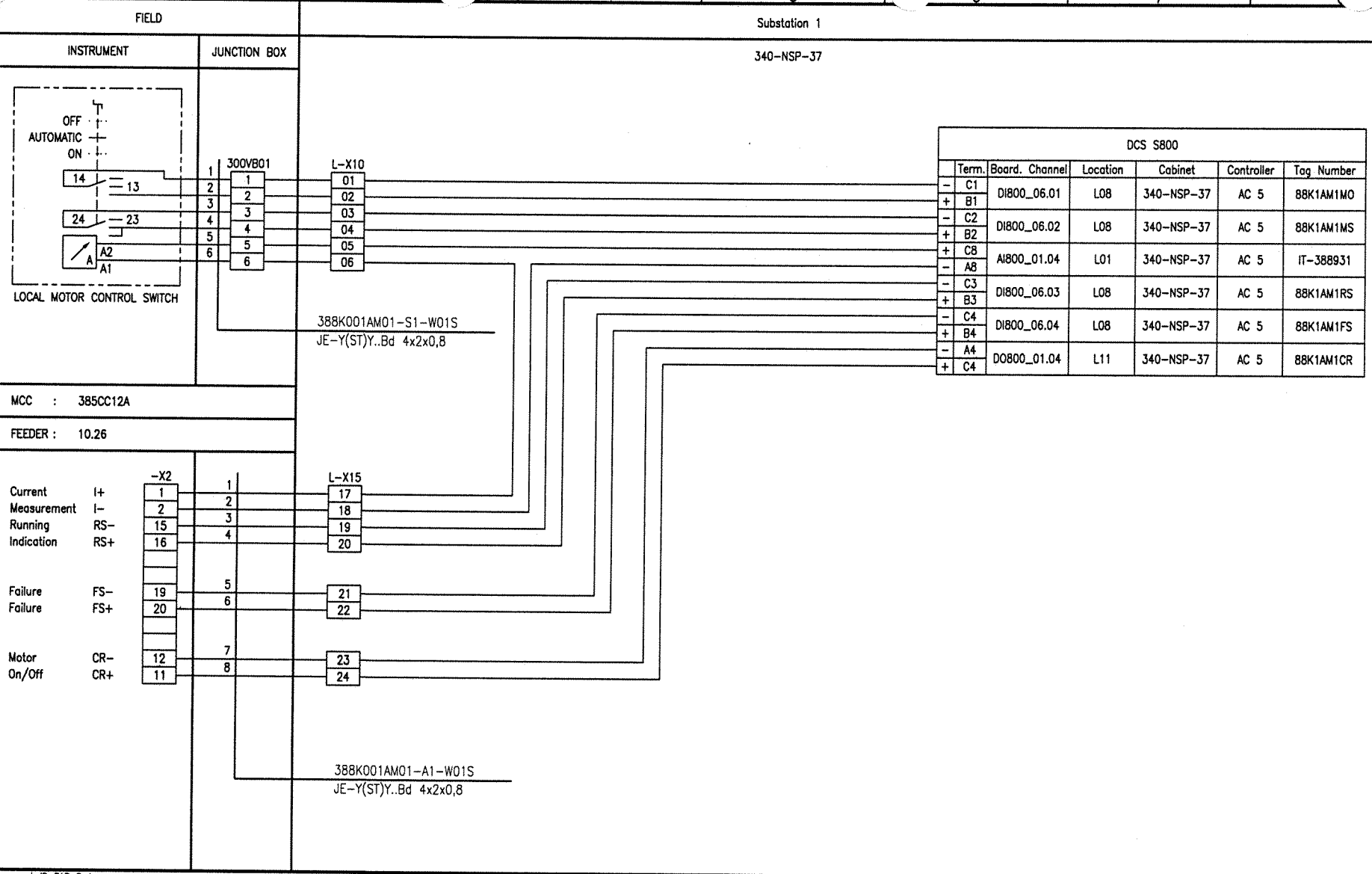

Document-ID-BAR-Code

Rev.	Date	Name (Drawn/Prepared)	Date	Name (Checked)	Date	Name (Approved)	Description	Acc. Code
01	20.09.06	Hie Hie	20.09.06	Heuer	20.09.06	Heuer	AS BUILT	

UAN	Document ID	Part	Rev.	Group
01-3040	UD-EL-G00-FS-0001		01	

Code

Uhde

All rights reserved © Uhde GmbH

Pro. Unit	TON	Cat. Code	Acc. Code	Status
Con. Unit	Type of Document: DH	Order No.	Scale	Tot. Sheets

	Date	Name
Drawn	08.04.2005	Hielscher
Prepared	08.04.2005	Hohmann
Checked	08.04.2005	Heuer
Approved	08.04.2005	Heuer

AMMONIA / UREA PROJECT SUEZ II

Designation
Wiring diagram
388K001AM01

Store Location: Server \\p013040\013040-ADA
Store Location: Folder \Ei-ET\DH_el-wiring-diag\
Store Name 01-3040_388K001AM01_000_01.dwg

ISO A3

BORDER-A3_013040.dwg / AGG3A3_013040.dwg / 17.05.2004

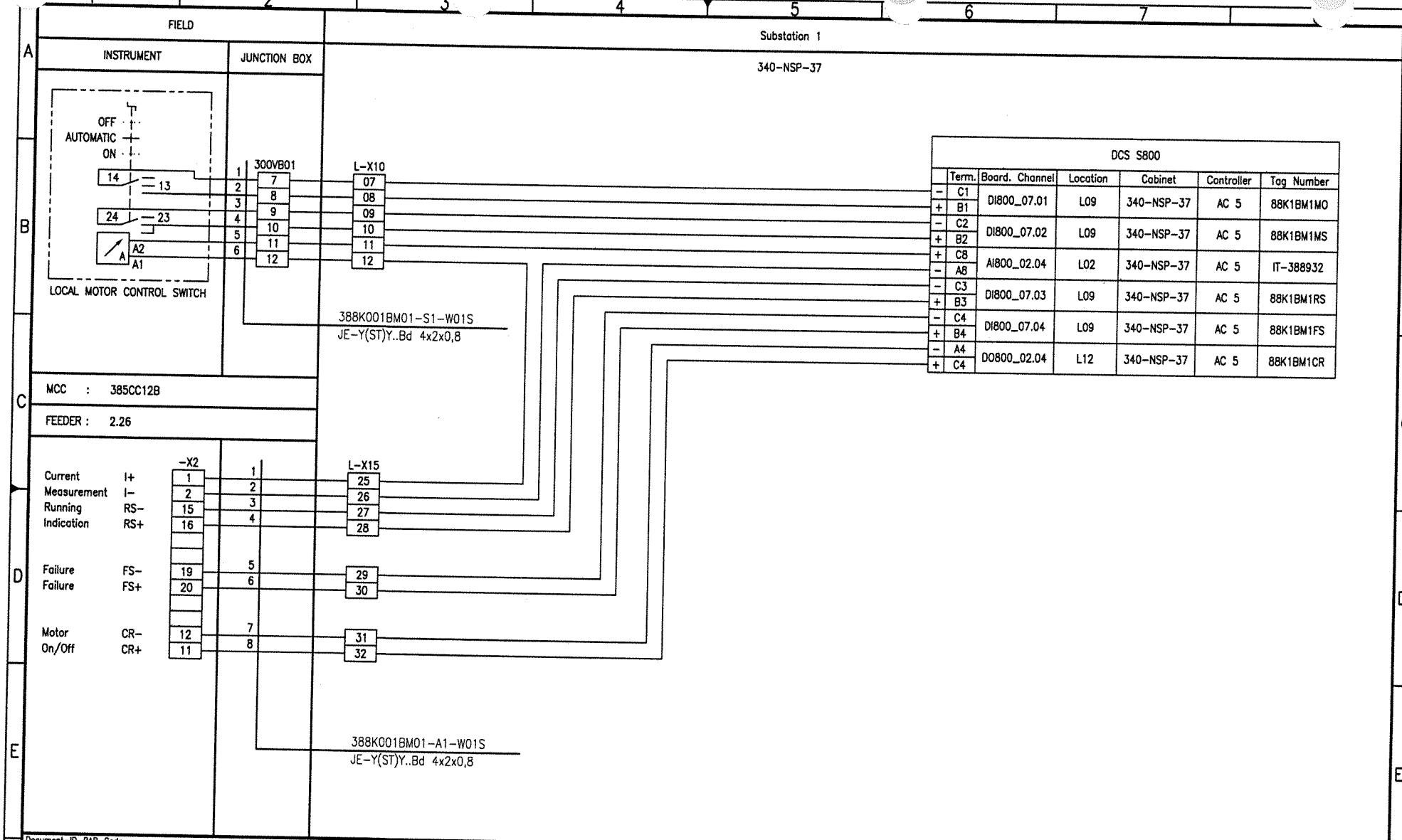
FIELD
INSTRUMENT
JUNCTION BOX
Substation 1
340-NSP-37
OFF
AUTOMATIC
ON
14
13
24
23
A2
A1
LOCAL MOTOR CONTROL SWITCH
300VB01
L-X10
388K001BM01-S1-W01S
JE-Y(ST)Y..Bd 4x2x0,8
MCC : 385CC12B
FEEDER : 2.26
-X2
Current Measurement I+ I-
Running Indication RS- RS+
Failure FS- Failure FS+
Motor On/Off CR- CR+
L-X15
388K001BM01-A1-W01S
JE-Y(ST)Y..Bd 4x2x0,8
DCS S800
Term. Board. Channel Location Cabinet Controller Tag Number
C1 B1 DI800_07.01 L09 340-NSP-37 AC 5 88K1BM1MO
C2 B2 DI800_07.02 L09 340-NSP-37 AC 5 88K1BM1MS
C8 A8 AI800_02.04 L02 340-NSP-37 AC 5 IT-388932
C3 B3 DI800_07.03 L09 340-NSP-37 AC 5 88K1BM1RS
C4 B4 DI800_07.04 L09 340-NSP-37 AC 5 88K1BM1FS
A4 C4 DO800_02.04 L12 340-NSP-37 AC 5 88K1BM1CR
Document-ID-BAR-Code
01 20.09.06 Hie Hie 20.09.06 Heuer 20.09.06 Heuer AS BUILT
Rev. Date Name Drawn/Prepared Date Name Checked Date Name Approved Description Acc. Code
UAN 01-3040
Code Document ID UD-EL-G00-FS-0001 Part Rev. 01 Group
Uhde
All rights reserved © Uhde GmbH
Pro. Unit TON Cat. Code Acc. Code Status
Con. Unit Type of Document DH Order No. Scale Tot. Sheets
Date Name
Drawn 08.04.2005 Hielscher
Prepared 08.04.2005 Hohmann
Checked 08.04.2005 Heuer
Approved 08.04.2005 Heuer
AMMONIA / UREA PROJECT SUEZ II
Designation
Wiring diagram 388K001BM01
Store Location: Server \\p013040\013040-ADA
Store Location: Folder \EI-ET\DH_el-wiring-diag\
Store Name 01-3040_388K001BM01_000_01.dwg
ISO A3
BORDER-A3_013040.dwg / A03A3_013040.dwg / 17.05.2004

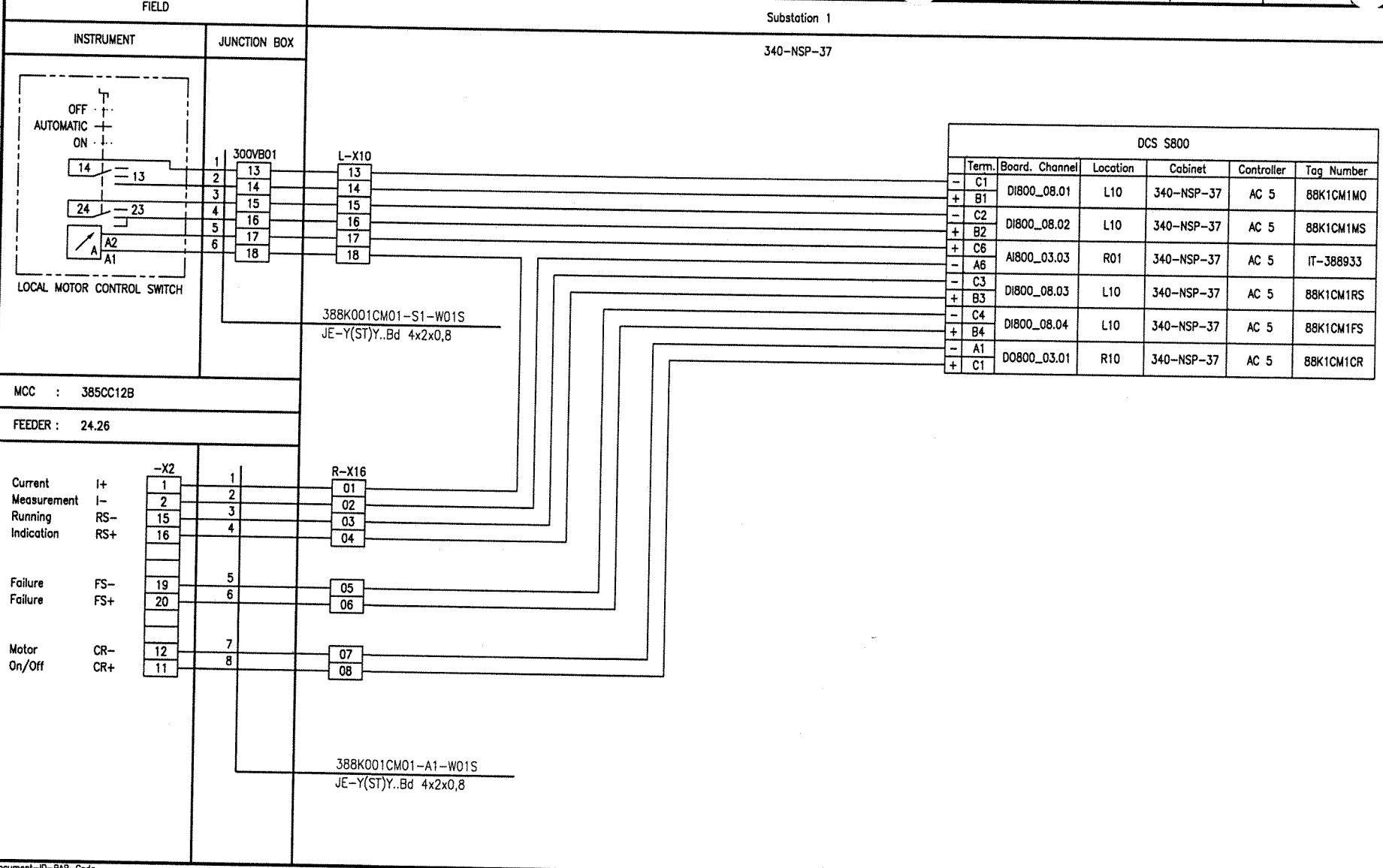

Document-ID-BAR-Code

Rev.	Date	Name (Drawn/Prepared)	Date	Name (Checked)	Date	Name (Approved)	Description	Acc. Code
01	20.09.06	Hie Hie	20.09.06	Heuer	20.09.06	Heuer	AS BUILT	

UAN 01-3040 | Code: Document ID UD-EL-G00-FS-0001 | Part | Rev. 01 | Group

Uhde

All rights reserved © Uhde GmbH

Pro. Unit	TON	Cat. Code	Acc. Code	Status
Con. Unit	Type of Document: DH	Order No.	Scale	Tot. Sheets

	Date	Name
Drawn	08.04.2005	Hielscher
Prepared	08.04.2005	Hohmann
Checked	08.04.2005	Heuer
Approved	08.04.2005	Heuer

AMMONIA / UREA PROJECT SUEZ II

Designation: Wiring diagram 388K001CM01

Store Location: Server \\p013040\013040-ADA

Store Location: Folder \Ei-ET\DH_el-wiring-diag\

Store Name: 01-3040_388K001CM01_000_01.dwg

ISO A3

BORDER-A3_013040.dwg / AG03A3_013040.dwg / 17.05.2004

FIELD

INSTRUMENT | JUNCTION BOX

Substation 1

340-NSP-37

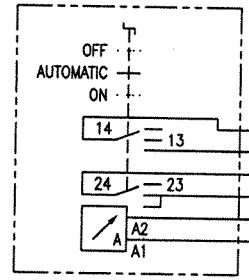

LOCAL MOTOR CONTROL SWITCH

300VB11

R-X01

388K002AM01-S1-W01S
JE-Y(ST)Y..Bd 4x2x0,8

MCC : 385CC12B

FEEDER : 29.26

-X2

R-X02

		-X2		R-X02
Current Measurement	I+	1	1	01
	I-	2	2	02
Running Indication	RS-	15	3	03
	RS+	16	4	04
Failure	FS-	19	5	05
Failure	FS+	20	6	06
Motor On/Off	CR-	12	7	07
	CR+	11	8	08

388K002AM01-A1-W01S
JE-Y(ST)Y..Bd 4x2x0,8

DCS S800

	Term.	Board. Channel	Location	Cabinet	Controller	Tag Number
-	C5	DI800_06.05	L08	340-NSP-37	AC 5	88K2AM1MO
+	B5					
-	C6	DI800_06.06	L08	340-NSP-37	AC 5	88K2AM1MS
+	B6					
+	C2	AI800_04.01	R02	340-NSP-37	AC 5	IT-388934
-	A2					
-	C7	DI800_06.07	L08	340-NSP-37	AC 5	88K2AM1RS
+	B7					
-	C8	DI800_06.08	L08	340-NSP-37	AC 5	88K2AM1FS
+	B8					
-	A5	DO800_01.05	L11	340-NSP-37	AC 5	88K2AM1CR
+	C5					

BORDER-A3_013040.dwg / A03X3_013040.dwg / 17.05.2004

Document-ID-BAR-Code

Rev.	Date	Name (Drawn/Prepared)	Date	Name (Checked)	Date	Name (Approved)	Description	Acc. Code
01	20.09.06	Hie Hie	20.09.06	Heuer	20.09.06	Heuer	AS BUILT	

UAN	Document ID	Part	Rev.	Group
01-3040	UD-EL-G00-FS-0001		01	

Code

Uhde

All rights reserved © Uhde GmbH

Pro. Unit	TON	Cat. Code	Acc. Code	Status
Con. Unit	Type of Document: DH	Order No.	Scale	Tot. Sheets

	Date	Name
Drawn	08.04.2005	Hielscher
Prepared	08.04.2005	Hohmann
Checked	08.04.2005	Heuer
Approved	08.04.2005	Heuer

AMMONIA / UREA PROJECT SUEZ II

Designation
Wiring diagram
388K002AM01

Store Location: Server \\p013040\013040-ADA

Store Location: Folder \Ei-ET\DH_el-wiring-diag\

Store Name 01-3040_388K002AM01_000_01.dwg

ISO A3

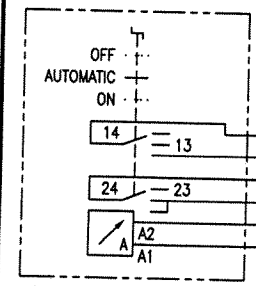

FIELD

INSTRUMENT | JUNCTION BOX

Substation 1

340-NSP-37

DCS S800

	Term.	Board. Channel	Location	Cabinet	Controller	Tag Number
-	C5	DI800_07.05	L09	340-NSP-37	AC 5	88K2BM1MO
+	B5					
-	C6	DI800_07.06	L09	340-NSP-37	AC 5	88K2BM1MS
+	B6					
+	C2	AI800_05.01	L01	340-NSP-38	AC 5	IT-388935
-	A2					
-	C7	DI800_07.07	L09	340-NSP-37	AC 5	88K2BM1RS
+	B7					
-	C8	DI800_07.08	L09	340-NSP-37	AC 5	88K2BM1FS
+	B8					
-	A5	DO800_02.05	L12	340-NSP-37	AC 5	88K2BM1CR
+	C5					

Document-ID-BAR-Code

Rev.	Date	Name	Drawn/Prepared	Date	Name	Checked	Date	Name	Approved	Description	Acc. Code
01	20.09.06	Hie	Hie	20.09.06	Heuer		20.09.06	Heuer		AS BUILT	

UAN	Document ID	Part	Rev.	Group
01-3040	UD-EL-G00-FS-0001		01	

Code

Uhde

All rights reserved © Uhde GmbH

Pro. Unit	TON	Cat. Code	Acc. Code	Status
Con. Unit	Type of Document: DH	Order No.	Scale	Tot. Sheets

	Date	Name
Drawn	08.04.2005	Hielscher
Prepared	08.04.2005	Hohmann
Checked	08.04.2005	Heuer
Approved	08.04.2005	Heuer

AMMONIA / UREA PROJECT SUEZ II

Designation: Wiring diagram 388K002BM01

Store Location: Server \\p013040\013040-ADA

Store Location: Folder \EI-ET\DH_el-wiring-diag\

Store Name 01-3040_388K002BM01_000_01.dwg

ISO A3

BORDER-A3_013040.dwg / A03A3_013040.dwg / 17.05.2004

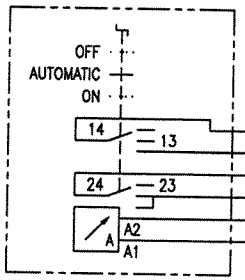

FIELD

INSTRUMENT | JUNCTION BOX

Substation 1

340-NSP-37

MCC : 385CC12B

FEEDER : 27.26

DCS S800

	Term.	Board. Channel	Location	Cabinet	Controller	Tag Number
-	C5	DI800_08.05	L10	340-NSP-37	AC 5	88K2CM1MO
+	B5					
-	C6	DI800_08.06	L10	340-NSP-37	AC 5	88K2CM1MS
+	B5					
+	C8	AI800_03.04	R01	340-NSP-37	AC 5	IT-388936
-	A8					
-	C7	DI800_08.07	L10	340-NSP-37	AC 5	88K2CM1RS
+	B7					
-	C8	DI800_08.08	L10	340-NSP-37	AC 5	88K2CM1FS
+	B8					
-	A2	DO800_03.02	R10	340-NSP-37	AC 5	88K2CM1CR
+	C2					

Document-ID-BAR-Code

Rev.	Date	Name (Drawn/Prepared)	Date	Name (Checked)	Date	Name (Approved)	Description	Acc. Code
01	20.09.06	Hie Hie	20.09.06	Heuer	20.09.06	Heuer	AS BUILT	

UAN 01-3040 | Document ID UD-EL-G00-FS-0001 | Part | Rev. 01 | Group

Uhde

All rights reserved © Uhde GmbH

Pro. Unit | TON | Cat. Code | Acc. Code | Status

Con. Unit | Type of Document DH | Order No. | Scale | Tot. Sheets

	Date	Name
Drawn	08.04.2005	Hielscher
Prepared	08.04.2005	Hohmann
Checked	08.04.2005	Heuer
Approved	08.04.2005	Heuer

AMMONIA / UREA PROJECT SUEZ II

Designation
Wiring diagram
388K002CM01

Store Location: Server \\p013040\013040-ADA

Store Location: Folder \EI-ET\DH_el-wiring-diag\

Store Name 01-3040_388K002CM01_000_01.dwg

ISO A3

BORDER-A3_013040.dwg / A003A3_013040.dwg / 17.05.2004

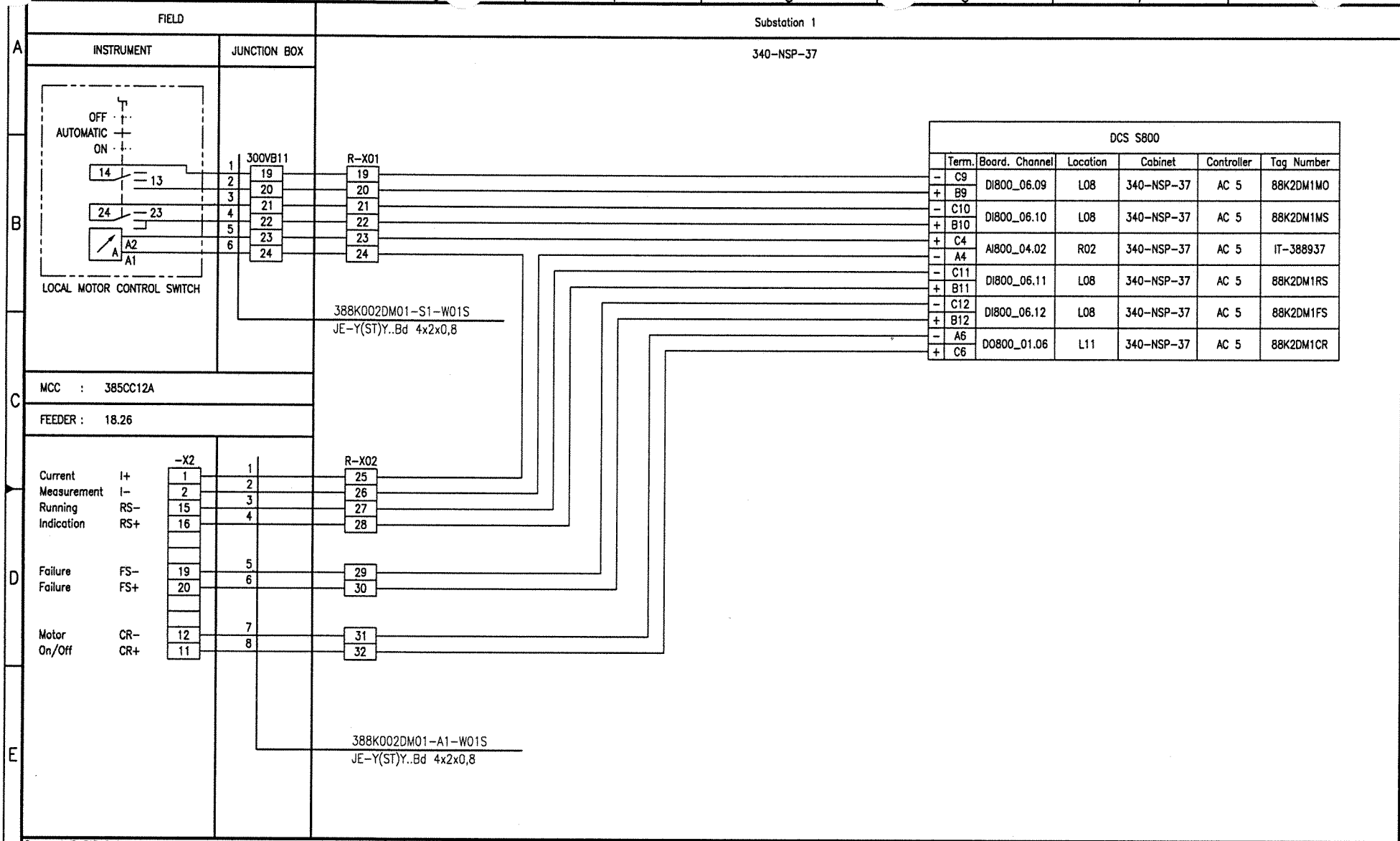

DCS S800

	Term.	Board. Channel	Location	Cabinet	Controller	Tag Number
-	C9	DI800_06.09	L08	340-NSP-37	AC 5	88K2DM1MO
+	B9					
-	C10	DI800_06.10	L08	340-NSP-37	AC 5	88K2DM1MS
+	B10					
+	C4	AI800_04.02	R02	340-NSP-37	AC 5	IT-388937
-	A4					
-	C11	DI800_06.11	L08	340-NSP-37	AC 5	88K2DM1RS
+	B11					
-	C12	DI800_06.12	L08	340-NSP-37	AC 5	88K2DM1FS
+	B12					
-	A6	DO800_01.06	L11	340-NSP-37	AC 5	88K2DM1CR
+	C6					

Document-ID-BAR-Code

Rev.	Date	Name	Date	Name	Date	Name	Description	Acc. Code
01	20.09.06	Hie	20.09.06	Heuer	20.09.06	Heuer	AS BUILT	
	Drawn/Prepared		Checked		Approved			

UAN	Document ID	Part	Rev.	Group
01-3040	UD-EL-G00-FS-0001		01	

Code

Pro. Unit	TON	Cat. Code	Acc. Code	Status

Con. Unit	Type of Document	Order No.	Scale	Tot. Sheets
	DH			

	Date	Name
Drawn	08.04.2005	Hielscher
Prepared	08.04.2005	Hohmann
Checked	08.04.2005	Heuer
Approved	08.04.2005	Heuer

AMMONIA / UREA PROJECT SUEZ II

Uhde

All rights reserved © Uhde GmbH

Designation
Wiring diagram
388K002DM01

Store Location: Server
\\p013040\013040-ADA

Store Location: Folder
\EI-ET\DH_el-wiring-diag\

Store Name
01-3040_388K002DM01_000_01.dwg

ISO A3

BORDER-A3_013040.dwg / A003A3_013040.dwg / 17.05.2004

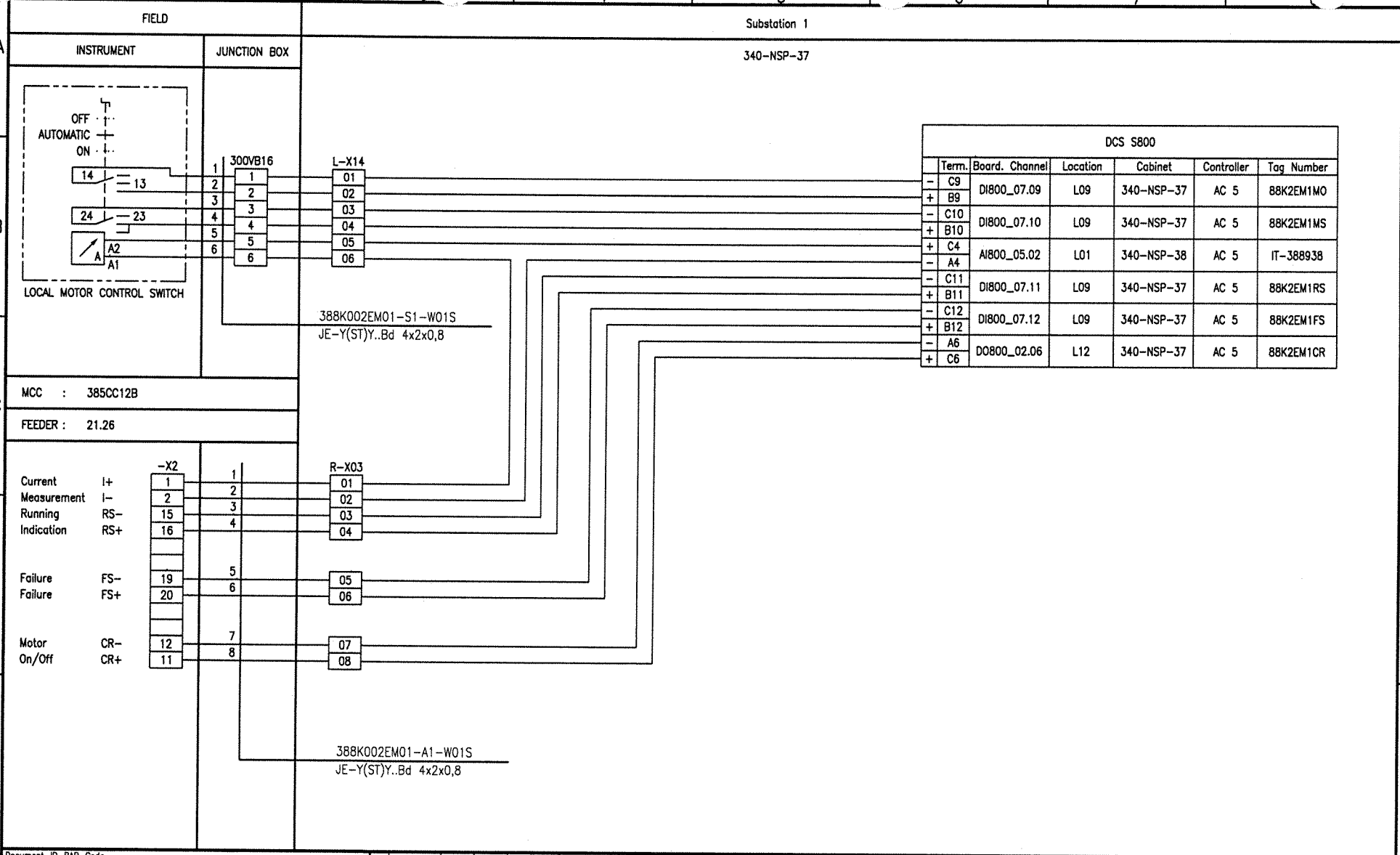

Document-ID-BAR-Code

Rev.	Date	Name	Date	Name	Date	Name	Description	Acc. Code
01	20.09.06	Hie	20.09.06	Heuer	20.09.06	Heuer	AS BUILT	
	Drawn/Prepared		Checked		Approved			

UAN	Document ID	Part	Rev.	Group
01-3040	UD-EL-G00-FS-0001		01	

Code

Uhde

All rights reserved © Uhde GmbH

Pro. Unit	TON	Cat. Code	Acc. Code	Status
Con. Unit	Type of Document: DH	Order No.	Scale	Tot. Sheets

	Date	Name
Drawn	08.04.2005	Hielscher
Prepared	08.04.2005	Hohmann
Checked	08.04.2005	Heuer
Approved	08.04.2005	Heuer

AMMONIA / UREA PROJECT SUEZ II

Designation
Wiring diagram
388K002EM01

Store Location: Server \\p013040\013040-ADA
Store Location: Folder \Ei-ET\DH_el-wiring-diag\
Store Name 01-3040_388K002EM01_000_01.dwg

ISO A3

BORDER-A3_013040.dwg / A03A3_013040.dwg / 17.05.2004

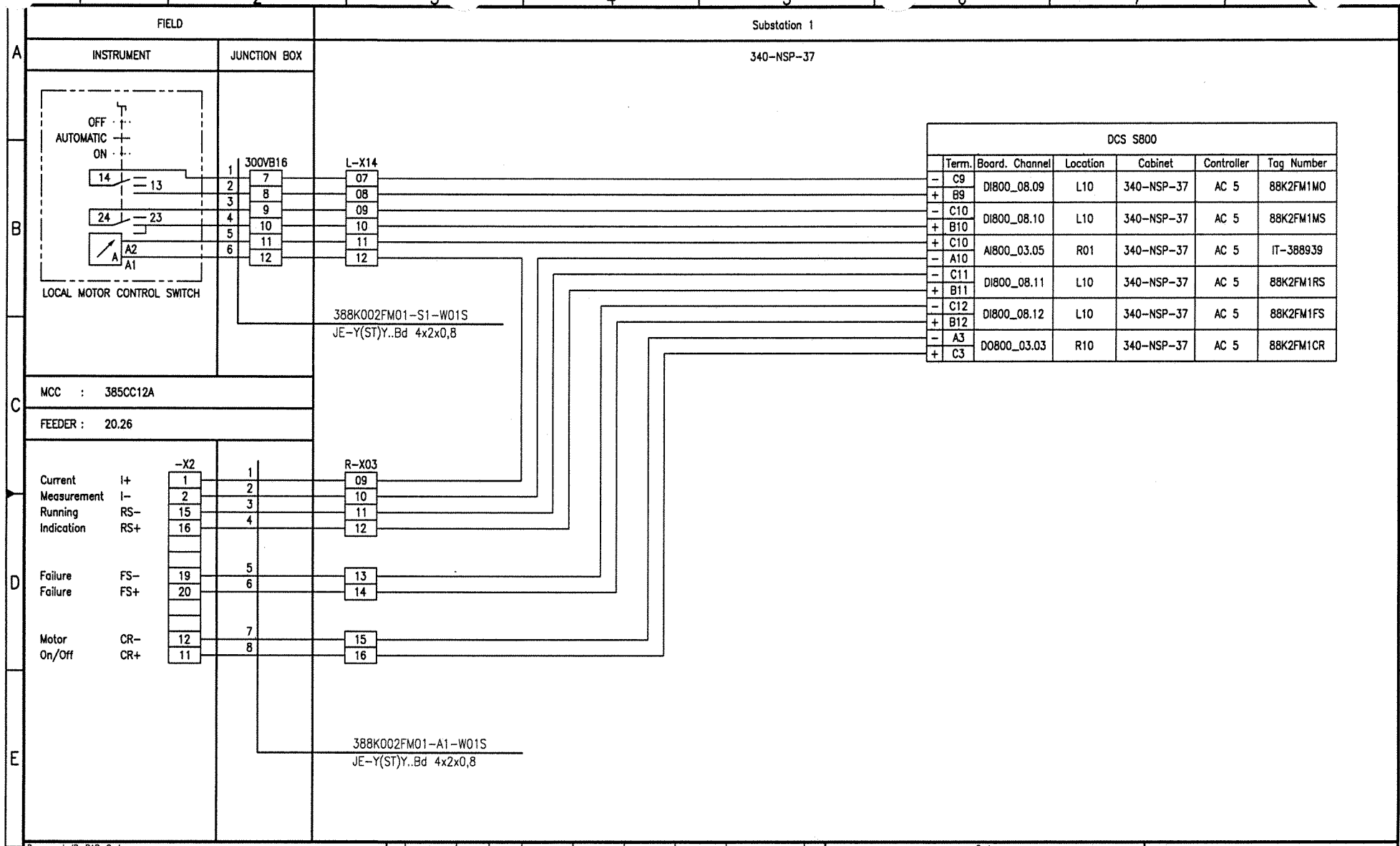

Document-ID-BAR-Code

Rev.	Date	Name	Date	Name	Date	Name	Description	Acc. Code
01	20.09.06	Hie	20.09.06	Heuer	20.09.06	Heuer	AS BUILT	
	Drawn/Prepared		Checked		Approved			

UAN	Document ID	Part	Rev.	Group
01-3040	UD-EL-G00-FS-0001		01	

Code

Uhde

All rights reserved © Uhde GmbH

Pro. Unit	TON	Cat. Code	Acc. Code	Status
Con. Unit	Type of Document: DH	Order No.	Scale	Tot. Sheets

	Date	Name
Drawn	08.04.2005	Hielscher
Prepared	08.04.2005	Hohmann
Checked	08.04.2005	Heuer
Approved	08.04.2005	Heuer

AMMONIA / UREA PROJECT SUEZ II

Designation
Wiring diagram
388K002FM01

Store Location: Server
\\p013040\013040-ADA

Store Location: Folder
\Ei-ET\DH_el-wiring-diag\

Store Name
01-3040_388K002FM01_000_01.dwg

ISO A3

BORDER-A3_013040.dwg / AG03A3_013040.dwg / 17.05.2004

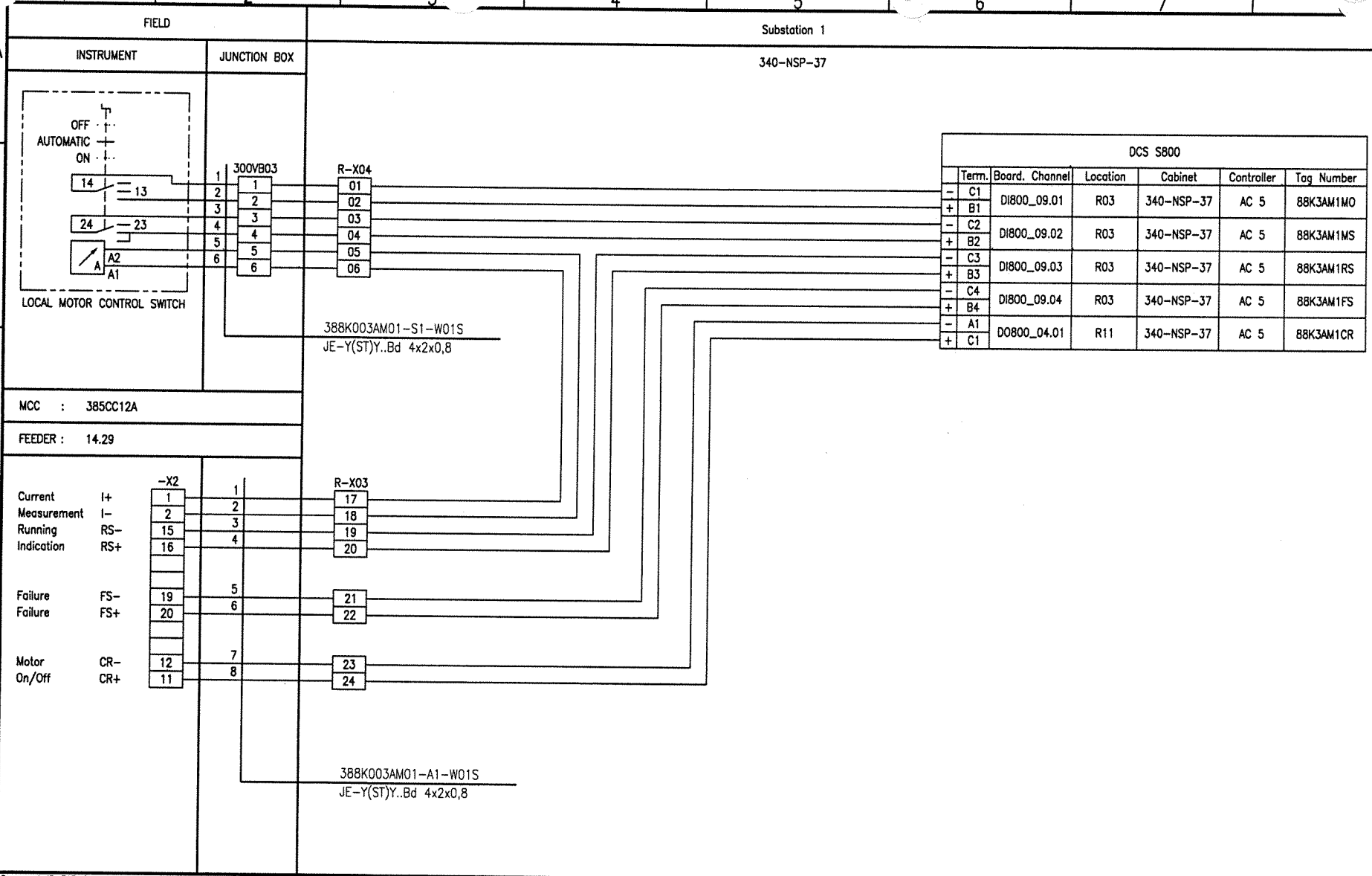

Document-ID-BAR-Code

Rev.	Date	Name (Drawn/Prepared)	Date	Name (Checked)	Date	Name (Approved)	Description	Acc. Code
01	20.09.06	Hie	20.09.06	Heuer	20.09.06	Heuer	AS BUILT	

UAN	Document ID	Part	Rev.	Group
01-3040	UD-EL-G00-FS-0001		01	

Code

Pro. Unit | TON | Cat. Code | Acc. Code | Status

Con. Unit | Type of Document: DH | Order No. | Scale | Tot. Sheets

	Date	Name
Drawn	08.04.2005	Hielscher
Prepared	08.04.2005	Hohmann
Checked	08.04.2005	Heuer
Approved	08.04.2005	Heuer

Store Location: Server \\p013040\013040-ADA

Store Location: Folder \EI-ET\DH_el-wiring-diag\

Store Name 01-3040_388K003AM01_000_01.dwg

AMMONIA / UREA PROJECT SUEZ II

Uhde

All rights reserved © Uhde GmbH

Designation
Wiring diagram
388K003AM01

ISO A3

BORDER-A3_013040.dwg / AG03A3_013040.dwg / 17.05.2004

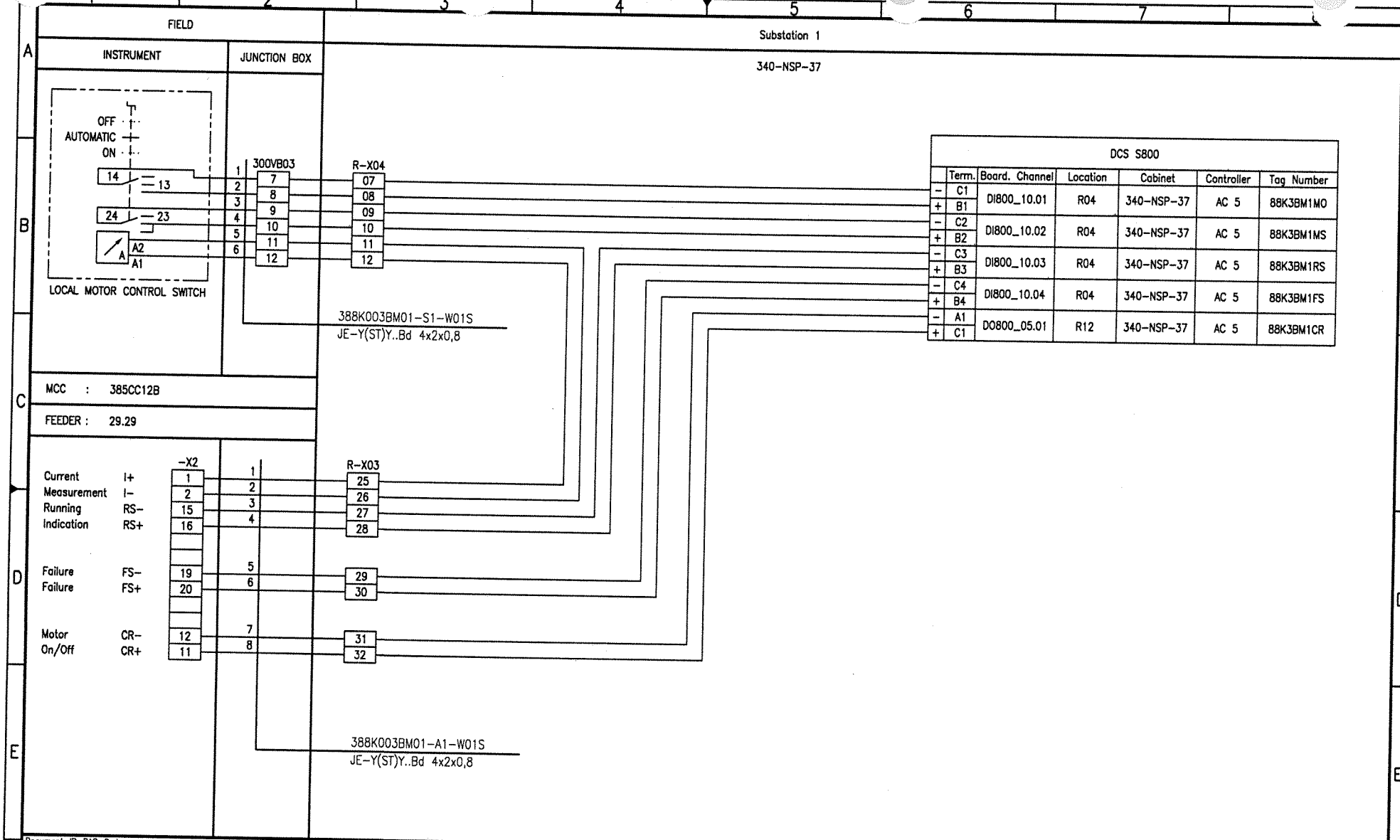

Document-ID-BAR-Code

Rev.	Date	Name Drawn/Prepared	Date	Name Checked	Date	Name Approved	Description	Acc. Code
01	20.09.06	Hie Hie	20.09.06	Heuer	20.09.06	Heuer	AS BUILT	

UAN	Code: Document ID	Part	Rev.	Group
01-3040	UD-EL-G00-FS-0001		01	

Uhde

All rights reserved © Uhde GmbH

Pro. Unit	TON	Cat. Code	Acc. Code	Status
Con. Unit	Type of Document: DH	Order No.	Scale	Tot. Sheets

	Date	Name
Drawn	08.04.2005	Hielscher
Prepared	08.04.2005	Hohmann
Checked	08.04.2005	Heuer
Approved	08.04.2005	Heuer

AMMONIA / UREA PROJECT SUEZ II

Designation: Wiring diagram 388K003BM01

Store Location: Server \\p013040\013040-ADA

Store Location: Folder \EI-ET\DH_el-wiring-diag\

Store Name: 01-3040_388K003BM01_000_01.dwg

ISO A3

BORDER-A3_013040.dwg / AG03A3_013040.dwg / 17.05.2004

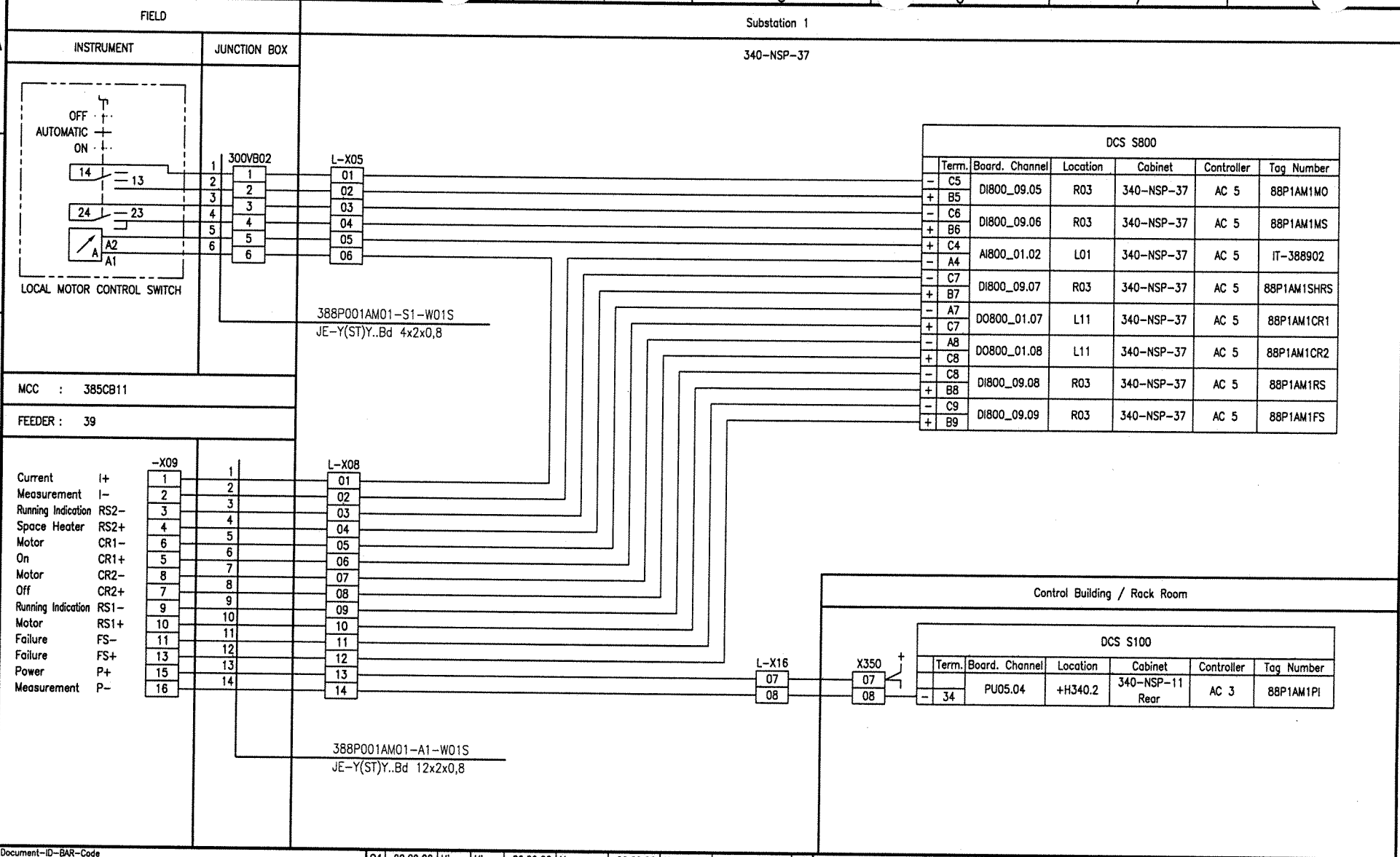

	Term.	Board. Channel	Location	Cabinet	Controller	Tag Number
-	C5	DI800_09.05	R03	340-NSP-37	AC 5	88P1AM1MO
+	B5					
-	C6	DI800_09.06	R03	340-NSP-37	AC 5	88P1AM1MS
+	B6					
+	C4	AI800_01.02	L01	340-NSP-37	AC 5	IT-388902
-	A4					
-	C7	DI800_09.07	R03	340-NSP-37	AC 5	88P1AM1SHRS
+	B7					
-	A7	DO800_01.07	L11	340-NSP-37	AC 5	88P1AM1CR1
+	C7					
-	A8	DO800_01.08	L11	340-NSP-37	AC 5	88P1AM1CR2
+	C8					
-	C8	DI800_09.08	R03	340-NSP-37	AC 5	88P1AM1RS
+	B8					
-	C9	DI800_09.09	R03	340-NSP-37	AC 5	88P1AM1FS
+	B9					

	Term.	Board. Channel	Location	Cabinet	Controller	Tag Number
-	34	PU05.04	+H340.2	340-NSP-11 Rear	AC 3	88P1AM1PI

Document-ID-BAR-Code

Rev.	Date	Name	Date	Name	Date	Name	Description	Acc. Code
01	20.09.06	Hie	20.09.06	Heuer	20.09.06	Heuer	AS BUILT	
	Drawn/Prepared		Checked		Approved			

UAN	Document ID	Part	Rev.	Group
01-3040	UD-EL-G00-FS-0001		01	

Code

Pro. Unit | TON | Cat. Code | Acc. Code | Status

Con. Unit | Type of Document: DH | Order No. | Scale | Tot. Sheets

	Date	Name
Drawn	08.04.2005	Hielscher
Prepared	08.04.2005	Hohmann
Checked	08.04.2005	Heuer
Approved	08.04.2005	Heuer

Store Location: Server \\p013040\013040-ADA

Store Location: Folder \EI-ET\DH_el-wiring-diag\

Store Name 01-3040_388P001AM01_000_01.dwg

AMMONIA / UREA PROJECT SUEZ II

Uhde

All rights reserved © Uhde GmbH

Designation
Wiring diagram
388P001AM01

ISO A3

FIELD | Substation 1

INSTRUMENT | JUNCTION BOX | 340-NSP-37

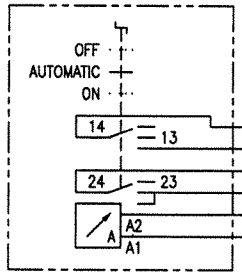

LOCAL MOTOR CONTROL SWITCH

MCC : 385CB11

FEEDER : 38

300VB02 — L-X05

388P001BM01-S1-W01S
JE-Y(ST)Y..Bd 4x2x0,8

Term.	Board. Channel	Location	Cabinet	Controller	Tag Number
DCS S800					
- C5	DI800_10.05	R04	340-NSP-37	AC 5	88P1BM1MO
+ B5					
- C6	DI800_10.06	R04	340-NSP-37	AC 5	88P1BM1MS
+ B6					
+ C4	AI800_02.02	L02	340-NSP-37	AC 5	IT-388903
- A4					
- C7	DI800_10.07	R04	340-NSP-37	AC 5	88P1BM1SHRS
+ B7					
- A7	DO800_02.07	L12	340-NSP-37	AC 5	88P1BM1CR1
+ C7					
- A8	DO800_02.08	L12	340-NSP-37	AC 5	88P1BM1CR2
+ C8					
- C8	DI800_10.08	R04	340-NSP-37	AC 5	88P1BM1RS
+ B8					
- C9	DI800_10.09	R04	340-NSP-37	AC 5	88P1BM1FS
+ B9					

-X09 — L-X08

		-X09	L-X08
Current	I+	1	15
Measurement	I-	2	16
Running Indication	RS2-	3	17
Space Heater	RS2+	4	18
Motor	CR1-	6	19
On	CR1+	5	20
Motor	CR2-	8	21
Off	CR2+	7	22
Running Indication	RS1-	9	23
Motor	RS1+	10	24
Failure	FS-	11	25
Failure	FS+	13	26
Power	P+	15	27
Measurement	P-	16	28

388P001BM01-A1-W01S
JE-Y(ST)Y..Bd 12x2x0,8

Control Building / Rack Room

L-X16 — X350

Term.	Board. Channel	Location	Cabinet	Controller	Tag Number
DCS S100					
- 35	PU05.05	+H340.2	340-NSP-11 Rear	AC 3	88P1BM1PI

Rev.	Date	Name	Date	Name	Date	Name	Description	Acc. Code
01	20.09.06	Hie	20.09.06	Heuer	20.09.06	Heuer	AS BUILT	
	Drawn/Prepared		Checked		Approved			

Document-ID-BAR-Code

UAN	Document ID	Part	Rev.	Group
01-3040	UD-EL-G00-FS-0001		01	

Code

Uhde

All rights reserved © Uhde GmbH

Pro. Unit	TON	Cat. Code	Acc. Code	Status
Con. Unit	Type of Document: DH	Order No.	Scale	Tot. Sheets

	Date	Name
Drawn	08.04.2005	Hielscher
Prepared	08.04.2005	Hohmann
Checked	08.04.2005	Heuer
Approved	08.04.2005	Heuer

AMMONIA / UREA PROJECT SUEZ II

Designation: Wiring diagram 388P001BM01

Store Location: Server \\p013040\013040-ADA

Store Location: Folder \EI-ET\DH_el-wiring-diag\

Store Name 01-3040_388P001BM01_000_01.dwg

ISO A3

BORDER-A3_013040.dwg / AG03A3_013040.dwg / 17.05.2004

FIELD

INSTRUMENT | JUNCTION BOX

Substation 1

340-NSP-37

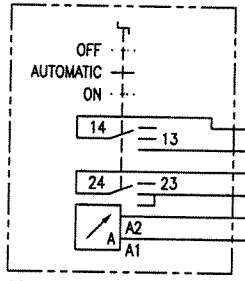

LOCAL MOTOR CONTROL SWITCH

300VB02: 1, 2, 3, 4, 5, 6 — 13, 14, 15, 16, 17, 18

L-X05: 13, 14, 15, 16, 17, 18

388P001CM01-S1-W01S
JE-Y(ST)Y..Bd 4x2x0,8

MCC : 385CB11

FEEDER : 37

		-X09		L-X09
Current	I+	1	1	01
Measurement	I-	2	2	02
Running Indication	RS2-	3	3	03
Space Heater	RS2+	4	4	04
Motor	CR1-	6	5	05
On	CR1+	5	6	06
Motor	CR2-	8	7	07
Off	CR2+	7	8	08
Running Indication	RS1-	9	9	09
Motor	RS1+	10	10	10
Failure	FS-	11	11	11
Failure	FS+	13	12	12
Power	P+	15	13	13
Measurement	P-	16	14	14

388P001CM01-A1-W01S
JE-Y(ST)Y..Bd 12x2x0,8

DCS S800

	Term.	Board. Channel	Location	Cabinet	Controller	Tag Number
-	C1	DI800_11.01	R05	340-NSP-37	AC 5	88P1CM1MO
+	B1					
-	C2	DI800_11.02	R05	340-NSP-37	AC 5	88P1CM1MS
+	B2					
+	C2	AI800_03.01	R01	340-NSP-37	AC 5	IT-388904
-	A2					
-	C3	DI800_11.03	R05	340-NSP-37	AC 5	88P1CM1SHRS
+	B3					
-	A4	DO800_03.04	R10	340-NSP-37	AC 5	88P1CM1CR1
+	C4					
-	A5	DO800_03.05	R10	340-NSP-37	AC 5	88P1CM1CR2
+	C5					
-	C4	DI800_11.04	R05	340-NSP-37	AC 5	88P1CM1RS
+	B4					
-	C5	DI800_11.05	R05	340-NSP-37	AC 5	88P1CM1FS
+	B5					

L-X16: 11, 12 — X350: 11, 12 (+)

Control Building / Rack Room

DCS S100

	Term.	Board. Channel	Location	Cabinet	Controller	Tag Number
-	36	PU05.06	+H340.2	340-NSP-11 Rear	AC 3	88P1CM1PI

Document-ID-BAR-Code

Rev.	Date	Name (Drawn/Prepared)	Date	Name (Checked)	Date	Name (Approved)	Description	Acc. Code
01	20.09.06	Hie Hie	20.09.06	Heuer	20.09.06	Heuer	AS BUILT	

UAN	Code: Document ID	Part	Rev.	Group
01-3040	UD-EL-G00-FS-0001		01	

Uhde

All rights reserved © Uhde GmbH

Pro. Unit	TON	Cat. Code	Acc. Code	Status

Con. Unit	Type of Document	Order No.	Scale	Tot. Sheets
	DH			

	Date	Name
Drawn	08.04.2005	Hielscher
Prepared	08.04.2005	Hohmann
Checked	08.04.2005	Heuer
Approved	08.04.2005	Heuer

AMMONIA / UREA PROJECT SUEZ II

Designation: Wiring diagram 388P001CM01

Store Location: Server \\p013040\013040-ADA

Store Location: Folder \EI-ET\DH_el-wiring-diag\

Store Name: 01-3040_388P001CM01_000_01.dwg

ISO A3

BORDER-A3_013040.dwg / AG03A3_013040.dwg / 17.05.2004

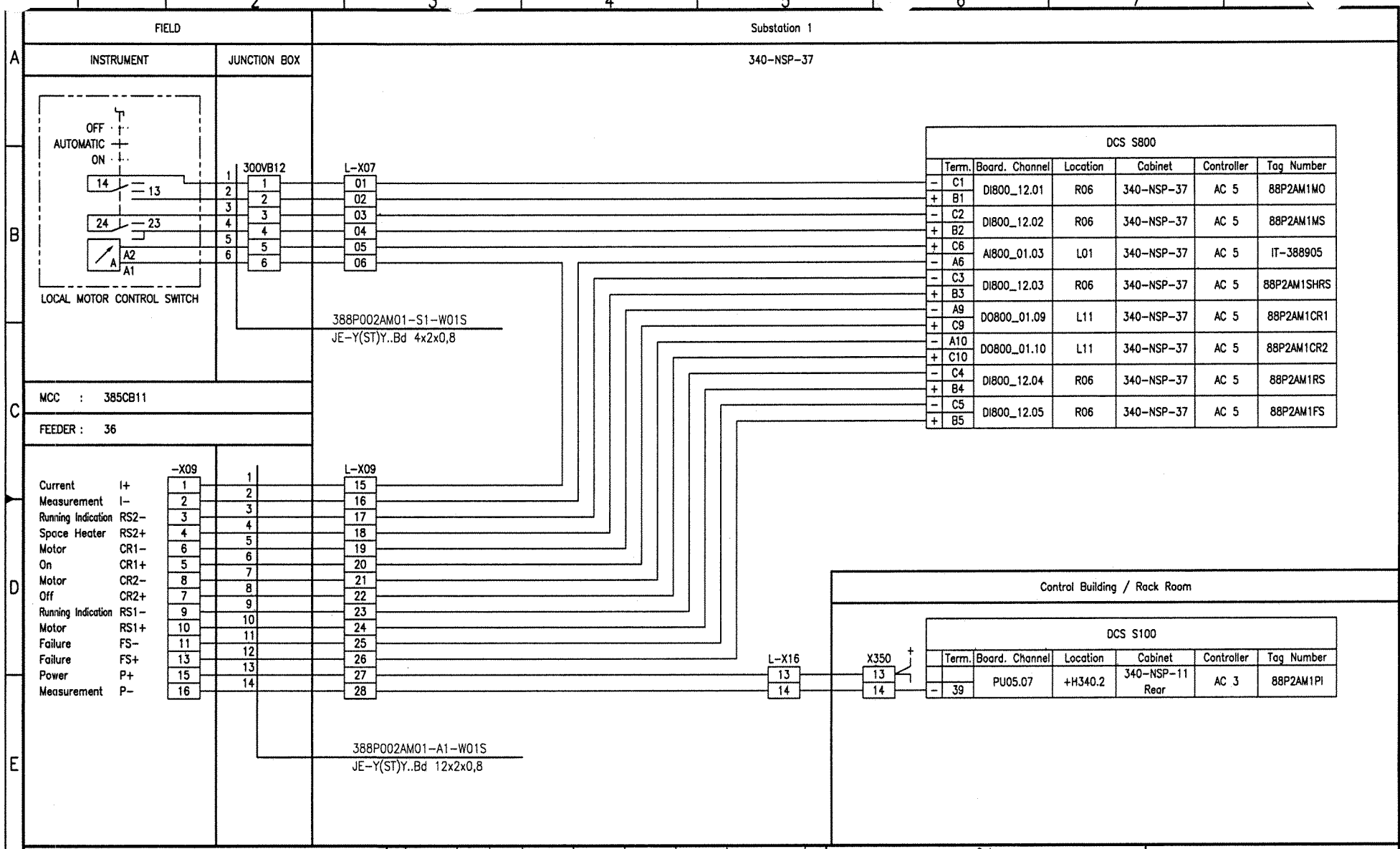
FIELD
Substation 1
INSTRUMENT
JUNCTION BOX
340-NSP-37
OFF
AUTOMATIC
ON
14
13
24
23
A2
A1
LOCAL MOTOR CONTROL SWITCH
300VB12
L-X07
01
02
03
04
05
06
388P002AM01-S1-W01S
JE-Y(ST)Y..Bd 4x2x0,8
MCC : 385CB11
FEEDER : 36
-X09
L-X09
Current I+
Measurement I-
Running Indication RS2-
Space Heater RS2+
Motor CR1-
On CR1+
Motor CR2-
Off CR2+
Running Indication RS1-
Motor RS1+
Failure FS-
Failure FS+
Power P+
Measurement P-
388P002AM01-A1-W01S
JE-Y(ST)Y..Bd 12x2x0,8
L-X16
X350
Control Building / Rack Room
DCS S800
Term. Board. Channel Location Cabinet Controller Tag Number
C1 B1 DI800_12.01 R06 340-NSP-37 AC 5 88P2AM1MO
C2 B2 DI800_12.02 R06 340-NSP-37 AC 5 88P2AM1MS
C6 A6 AI800_01.03 L01 340-NSP-37 AC 5 IT-388905
C3 B3 DI800_12.03 R06 340-NSP-37 AC 5 88P2AM1SHRS
A9 C9 DO800_01.09 L11 340-NSP-37 AC 5 88P2AM1CR1
A10 C10 DO800_01.10 L11 340-NSP-37 AC 5 88P2AM1CR2
C4 B4 DI800_12.04 R06 340-NSP-37 AC 5 88P2AM1RS
C5 B5 DI800_12.05 R06 340-NSP-37 AC 5 88P2AM1FS
DCS S100
Term. Board. Channel Location Cabinet Controller Tag Number
39 PU05.07 +H340.2 340-NSP-11 Rear AC 3 88P2AM1PI
Document-ID-BAR-Code
01 20.09.06 Hie Hie 20.09.06 Heuer 20.09.06 Heuer AS BUILT
Rev. Date Name Date Name Date Name Description Acc. Code
Drawn/Prepared Checked Approved
UAN 01-3040
Code
Document ID UD-EL-G00-FS-0001
Part
Rev. 01
Group
Uhde
All rights reserved © Uhde GmbH
Pro. Unit TON
Cat. Code
Acc. Code
Status
Con. Unit
Type of Document DH
Order No.
Scale
Tot. Sheets
Drawn 08.04.2005 Hielscher
Prepared 08.04.2005 Hohmann
Checked 08.04.2005 Heuer
Approved 08.04.2005 Heuer
AMMONIA / UREA PROJECT SUEZ II
Designation
Wiring diagram
388P002AM01
Store Location: Server
\\p013040\013040-ADA
Store Location: Folder
\EI-ET\DH_el-wiring-diag\
Store Name
01-3040_388P002AM01_000_01.dwg
ISO A3
BORDER-A3_013040.dwg / A003A3_013040.dwg / 17.05.2004

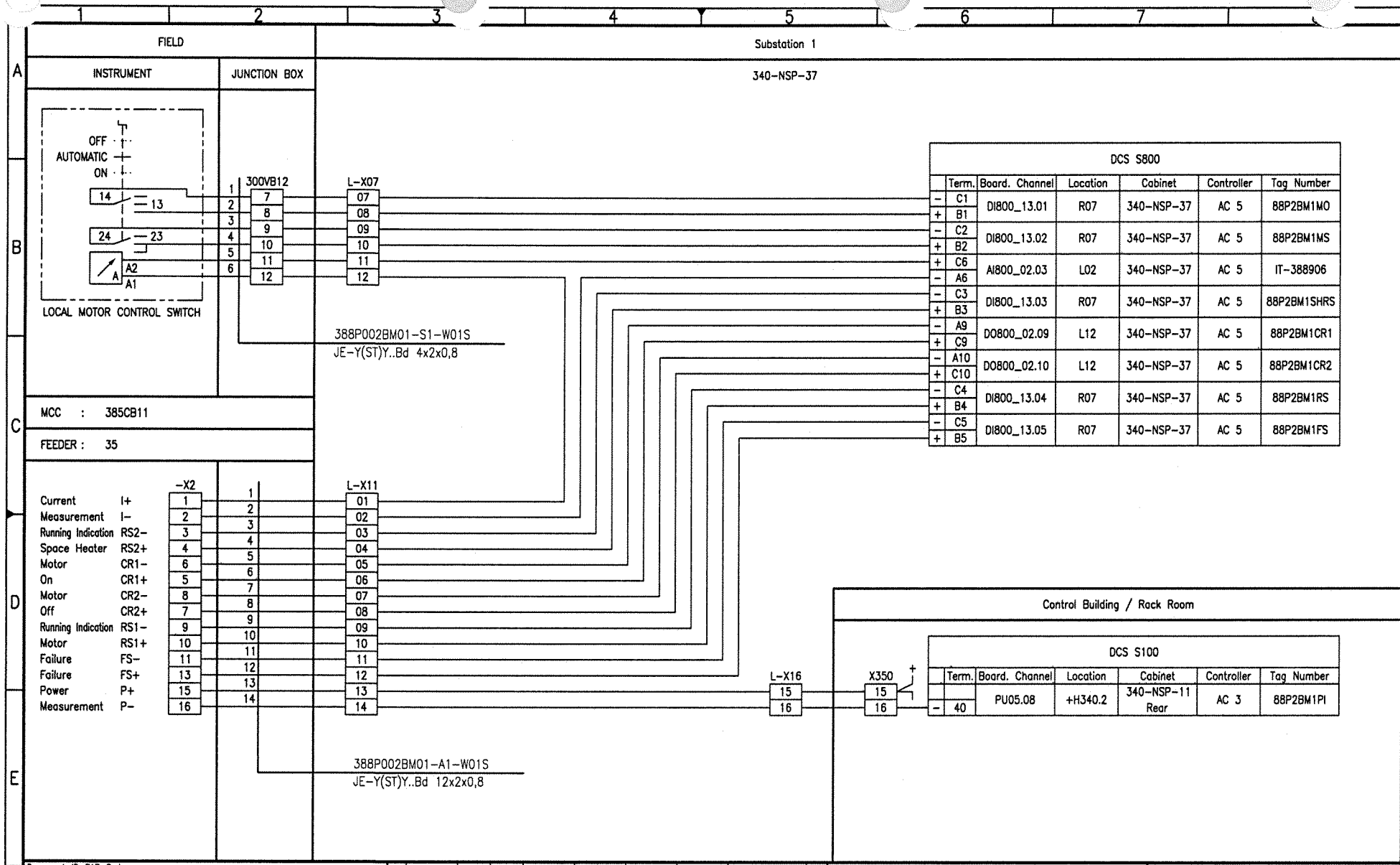
FIELD
Substation 1
INSTRUMENT
JUNCTION BOX
340-NSP-37
OFF
AUTOMATIC
ON
14
13
24
23
A2
A1
LOCAL MOTOR CONTROL SWITCH
300VB12
L-X07
388P002BM01-S1-W01S
JE-Y(ST)Y..Bd 4x2x0,8
MCC : 385CB11
FEEDER : 35
-X2
Current I+
Measurement I-
Running Indication RS2-
Space Heater RS2+
Motor CR1-
On CR1+
Motor CR2-
Off CR2+
Running Indication RS1-
Motor RS1+
Failure FS-
Failure FS+
Power P+
Measurement P-
L-X11
388P002BM01-A1-W01S
JE-Y(ST)Y..Bd 12x2x0,8
L-X16
X350
Control Building / Rack Room
DCS S800
Term. Board. Channel Location Cabinet Controller Tag Number
C1 B1 DI800_13.01 R07 340-NSP-37 AC 5 88P2BM1MO
C2 B2 DI800_13.02 R07 340-NSP-37 AC 5 88P2BM1MS
C6 A6 AI800_02.03 L02 340-NSP-37 AC 5 IT-388906
C3 B3 DI800_13.03 R07 340-NSP-37 AC 5 88P2BM1SHRS
A9 C9 DO800_02.09 L12 340-NSP-37 AC 5 88P2BM1CR1
A10 C10 DO800_02.10 L12 340-NSP-37 AC 5 88P2BM1CR2
C4 B4 DI800_13.04 R07 340-NSP-37 AC 5 88P2BM1RS
C5 B5 DI800_13.05 R07 340-NSP-37 AC 5 88P2BM1FS
DCS S100
Term. Board. Channel Location Cabinet Controller Tag Number
40 PU05.08 +H340.2 340-NSP-11 Rear AC 3 88P2BM1PI
BORDER-A3_013040.dwg / A03A3_013040.dwg / 17.05.2004
Document-ID-BAR-Code
01 20.09.06 Hie Hie 20.09.06 Heuer 20.09.06 Heuer AS BUILT
Rev. Date Name Date Name Date Name Description Acc. Code
Drawn/Prepared Checked Approved
UAN 01-3040
Code Document ID UD-EL-G00-FS-0001 Part Rev. 01 Group
Uhde
All rights reserved © Uhde GmbH
Pro. Unit TON Cat. Code Acc. Code Status
Con. Unit Type of Document DH Order No. Scale Tot. Sheets
Date Name
Drawn 08.04.2005 Hielscher
Prepared 08.04.2005 Hohmann
Checked 08.04.2005 Heuer
Approved 08.04.2005 Heuer
AMMONIA / UREA PROJECT SUEZ II
Designation
Wiring diagram 388P002BM01
Store Location: Server \\p013040\013040-ADA
Store Location: Folder \EI-ET\DH_el-wiring-diag\
Store Name 01-3040_388P002BM01_000_01.dwg
ISO A3

FIELD | Substation 1

INSTRUMENT | JUNCTION BOX | 340-NSP-37

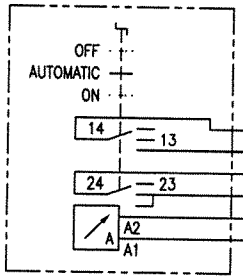

LOCAL MOTOR CONTROL SWITCH

300VB12: 1, 2, 3, 4, 5, 6 / 13, 14, 15, 16, 17, 18

L-X07: 13, 14, 15, 16, 17, 18

388P002CM01-S1-W01S
JE-Y(ST)Y..Bd 4x2x0,8

MCC : 385CB11

FEEDER : 34

		-X2		L-X11
Current	I+	1	1	15
Measurement	I-	2	2	16
Running Indication	RS2-	3	3	17
Space Heater	RS2+	4	4	18
Motor	CR1-	6	5	19
On	CR1+	5	6	20
Motor	CR2-	8	7	21
Off	CR2+	7	8	22
Running Indication	RS1-	9	9	23
Motor	RS1+	10	10	24
Failure	FS-	11	11	25
Failure	FS+	13	12	26
Power	P+	15	13	27
Measurement	P-	16	14	28

388P002CM01-A1-W01S
JE-Y(ST)Y..Bd 12x2x0,8

DCS S800

	Term.	Board. Channel	Location	Cabinet	Controller	Tag Number
-	C6	DI800_11.06	R05	340-NSP-37	AC 5	88P2CM1MO
+	B6					
-	C7	DI800_11.07	R05	340-NSP-37	AC 5	88P2CM1MS
+	B7					
+	C4	AI800_03.02	R01	340-NSP-37	AC 5	IT-388907
-	A4					
-	C8	DI800_11.08	R05	340-NSP-37	AC 5	88P2CM1SHRS
+	B8					
-	A6	DO800_03.06	R10	340-NSP-37	AC 5	88P2CM1CR1
+	C6					
-	A7	DO800_03.07	R10	340-NSP-37	AC 5	88P2CM1CR2
+	C7					
-	C9	DI800_11.09	R05	340-NSP-37	AC 5	88P2CM1RS
+	B9					
-	C10	DI800_11.10	R05	340-NSP-37	AC 5	88P2CM1FS
+	B10					

Control Building / Rack Room

L-X16: 17, 18 — X350: 17, 18 (+)

DCS S100

	Term.	Board. Channel	Location	Cabinet	Controller	Tag Number
-	41	PU05.09	+H340.2	340-NSP-11 Rear	AC 3	88P2CM1PI

Document-ID-BAR-Code

Rev.	Date	Name (Drawn/Prepared)	Date	Name (Checked)	Date	Name (Approved)	Description	Acc. Code
01	20.09.06	Hie Hie	20.09.06	Heuer	20.09.06	Heuer	AS BUILT	

UAN	Code: Document ID	Part	Rev.	Group
01-3040	UD-EL-G00-FS-0001		01	

Pro. Unit: TON | Cat. Code | Acc. Code | Status

Con. Unit | Type of Document: DH | Order No. | Scale | Tot. Sheets

	Date	Name
Drawn	08.04.2005	Hielscher
Prepared	08.04.2005	Hohmann
Checked	08.04.2005	Heuer
Approved	08.04.2005	Heuer

Uhde

All rights reserved © Uhde GmbH

AMMONIA / UREA PROJECT SUEZ II

Designation: Wiring diagram 388P002CM01

Store Location: Server \\p013040\013040-ADA
Store Location: Folder \EI-ET\DH_el-wiring-diag\
Store Name: 01-3040_388P002CM01_000_01.dwg

ISO A3

BORDER-A3_013040.dwg / A03A3_013040.dwg / 17.05.2004

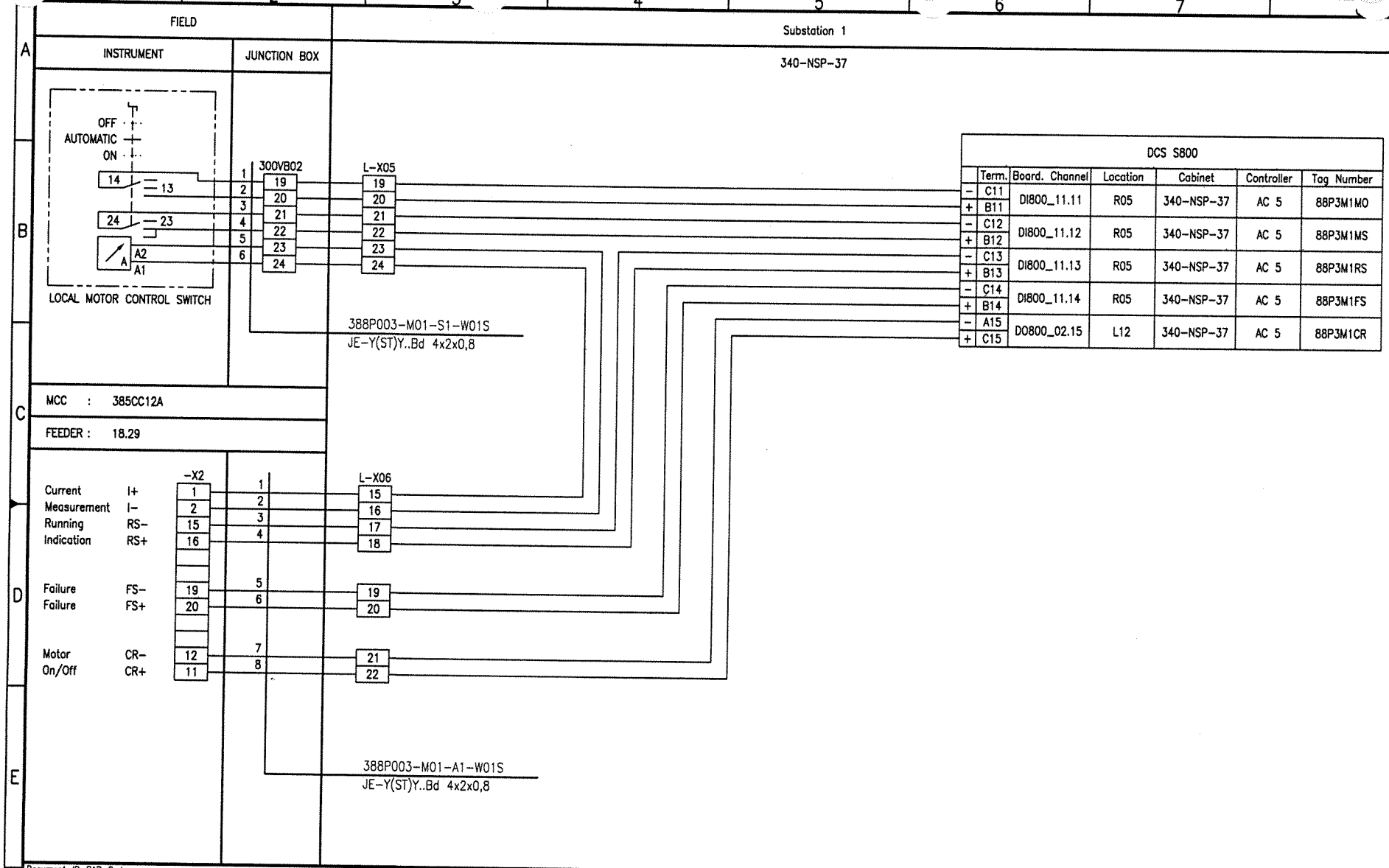

Document-ID-BAR-Code

Rev.	Date	Name (Drawn/Prepared)	Date	Name (Checked)	Date	Name (Approved)	Description	Acc. Code
01	20.09.06	Hie Hie	20.09.06	Heuer	20.09.06	Heuer	AS BUILT	

UAN 01-3040 | Code: Document ID UD-EL-G00-FS-0001 | Part | Rev. 01 | Group

Uhde

All rights reserved © Uhde GmbH

Pro. Unit | TON | Cat. Code | Acc. Code | Status

Con. Unit | Type of Document DH | Order No. | Scale | Tot. Sheets

	Date	Name
Drawn	08.04.2005	Hielscher
Prepared	08.04.2005	Hohmann
Checked	08.04.2005	Heuer
Approved	08.04.2005	Heuer

AMMONIA / UREA PROJECT SUEZ II

Designation: Wiring diagram 388P003-M01

Store Location: Server \\p013040\013040-ADA

Store Location: Folder \EI-ET\DH_el-wiring-diag\

Store Name 01-3040_388P003-M01_000_01.dwg

ISO A3

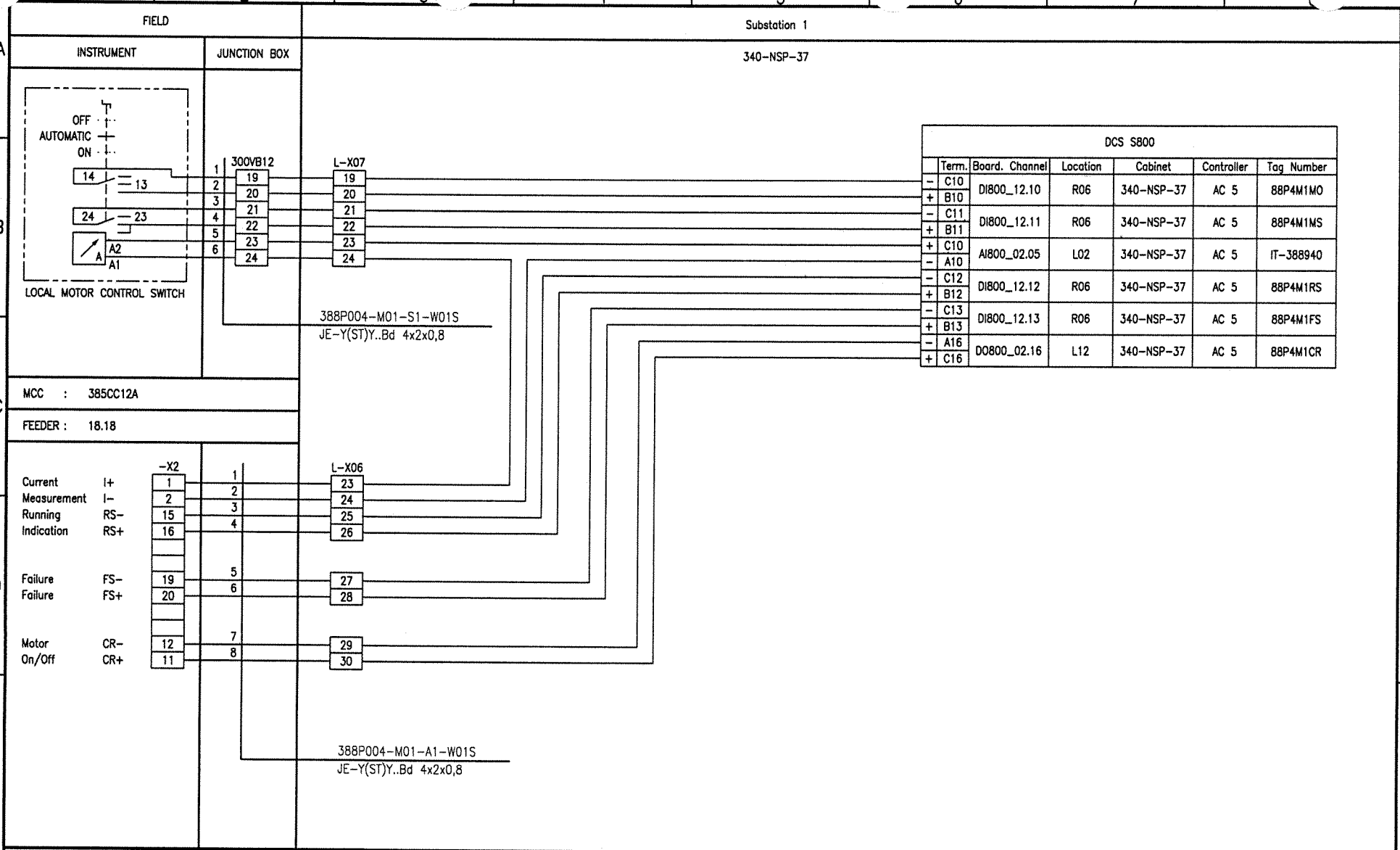
FIELD
INSTRUMENT
JUNCTION BOX
Substation 1
340-NSP-37
OFF
AUTOMATIC
ON
14
13
24
23
A2
A1
LOCAL MOTOR CONTROL SWITCH
300VB12
L-X07
388P004-M01-S1-W01S
JE-Y(ST)Y..Bd 4x2x0,8
MCC : 385CC12A
FEEDER : 18.18
-X2
L-X06
Current Measurement I+ I-
Running Indication RS- RS+
Failure FS-
Failure FS+
Motor On/Off CR- CR+
388P004-M01-A1-W01S
JE-Y(ST)Y..Bd 4x2x0,8
DCS S800
Term. Board. Channel Location Cabinet Controller Tag Number
C10 B10 DI800_12.10 R06 340-NSP-37 AC 5 88P4M1MO
C11 B11 DI800_12.11 R06 340-NSP-37 AC 5 88P4M1MS
C10 A10 AI800_02.05 L02 340-NSP-37 AC 5 IT-388940
C12 B12 DI800_12.12 R06 340-NSP-37 AC 5 88P4M1RS
C13 B13 DI800_12.13 R06 340-NSP-37 AC 5 88P4M1FS
A16 C16 DO800_02.16 L12 340-NSP-37 AC 5 88P4M1CR
Document-ID-BAR-Code
01 20.09.06 Hie Hie 20.09.06 Heuer 20.09.06 Heuer AS BUILT
Rev. Date Name Date Name Date Name Description Acc. Code
Drawn/Prepared Checked Approved
UAN 01-3040
Code Document ID UD-EL-G00-FS-0001 Part Rev. 01 Group
Uhde
All rights reserved © Uhde GmbH
Pro. Unit TON Cat. Code Acc. Code Status
Con. Unit Type of Document DH Order No. Scale Tot. Sheets
Drawn 08.04.2005 Hielscher
Prepared 08.04.2005 Hohmann
Checked 08.04.2005 Heuer
Approved 08.04.2005 Heuer
AMMONIA / UREA PROJECT SUEZ II
Designation
Wiring diagram 388P004-M01
Store Location: Server \\p013040\013040-ADA
Store Location: Folder \EI-ET\DH_el-wiring-diag\
Store Name 01-3040_388P004-M01_000_01.dwg
ISO A3
BORDER-A3_013040.dwg / AG03A3_013040.dwg / 17.05.2004

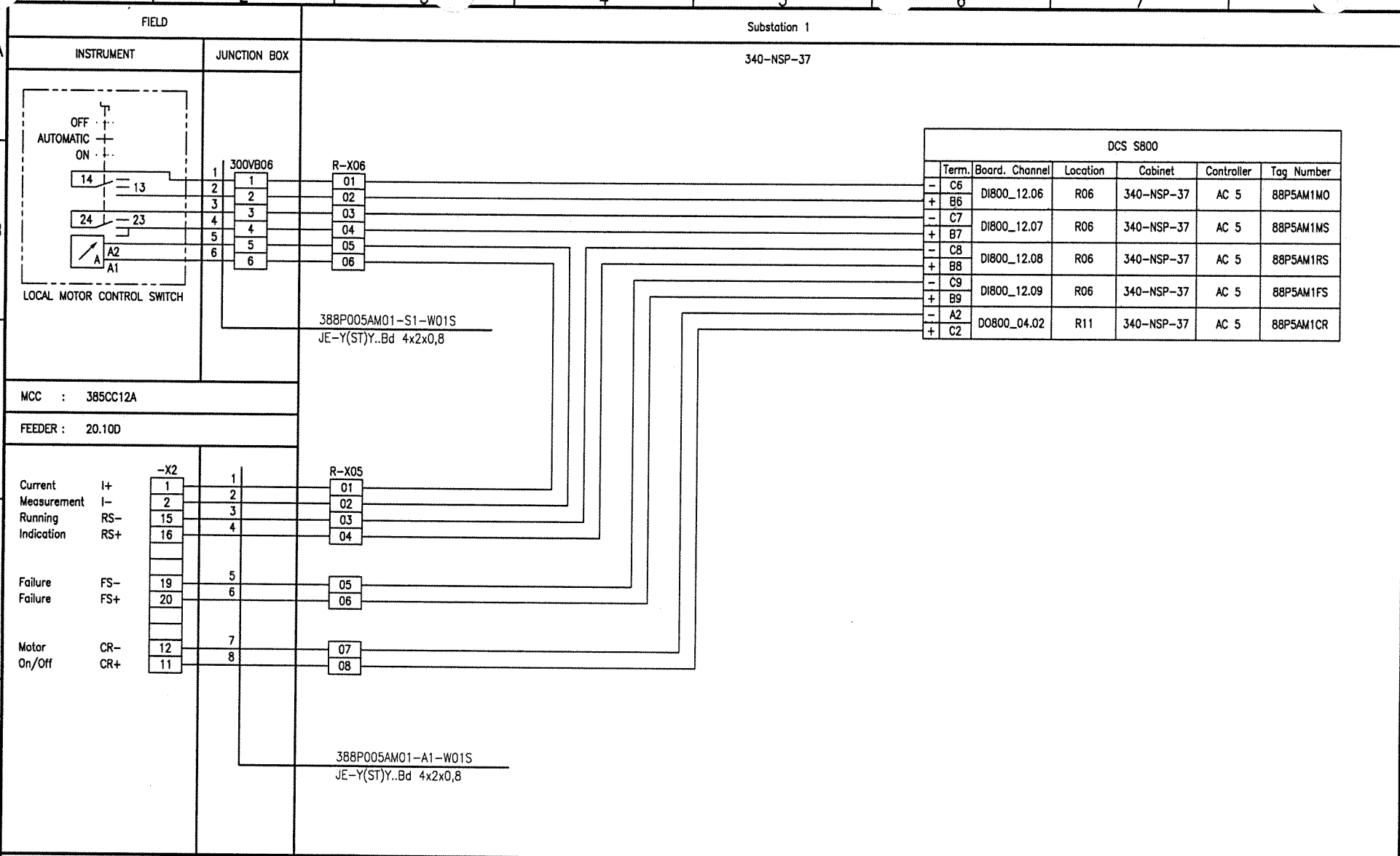
FIELD
INSTRUMENT
JUNCTION BOX
Substation 1
340-NSP-37
OFF
AUTOMATIC
ON
14
13
24
23
A2
A1
LOCAL MOTOR CONTROL SWITCH
300VB06
R-X06
388P005AM01-S1-W01S
JE-Y(ST)Y..Bd 4x2x0,8
MCC : 385CC12A
FEEDER : 20.10D
-X2
R-X05
Current Measurement I+ I-
Running Indication RS- RS+
Failure FS- Failure FS+
Motor On/Off CR- CR+
388P005AM01-A1-W01S
JE-Y(ST)Y..Bd 4x2x0,8
DCS S800
Term. Board. Channel Location Cabinet Controller Tag Number
C6 B6 DI800_12.06 R06 340-NSP-37 AC 5 88P5AM1MO
C7 B7 DI800_12.07 R06 340-NSP-37 AC 5 88P5AM1MS
C8 B8 DI800_12.08 R06 340-NSP-37 AC 5 88P5AM1RS
C9 B9 DI800_12.09 R06 340-NSP-37 AC 5 88P5AM1FS
A2 C2 DO800_04.02 R11 340-NSP-37 AC 5 88P5AM1CR
BORDER-A3_013040.dwg / AG03A3_013040.dwg / 17.05.2004
Document-ID-BAR-Code
01 20.09.06 Hie Hie 20.09.06 Heuer 20.09.06 Heuer AS BUILT
Rev. Date Name Date Name Date Name Description Acc. Code
Drawn/Prepared Checked Approved
UAN 01-3040
Code Document ID UD-EL-G00-FS-0001 Part Rev. 01 Group
Uhde
All rights reserved © Uhde GmbH
Pro. Unit TON Cat. Code Acc. Code Status
Con. Unit Type of Document DH Order No. Scale Tot. Sheets
Date Name
Drawn 08.04.2005 Hielscher
Prepared 08.04.2005 Hohmann
Checked 08.04.2005 Heuer
Approved 08.04.2005 Heuer
AMMONIA / UREA PROJECT SUEZ II
Designation
Wiring diagram 388P005AM01
Store Location: Server \\p013040\013040-ADA
Store Location: Folder \Ei-ET\DH_el-wiring-diag\
Store Name 01-3040_388P005AM01_000_01.dwg
ISO A3

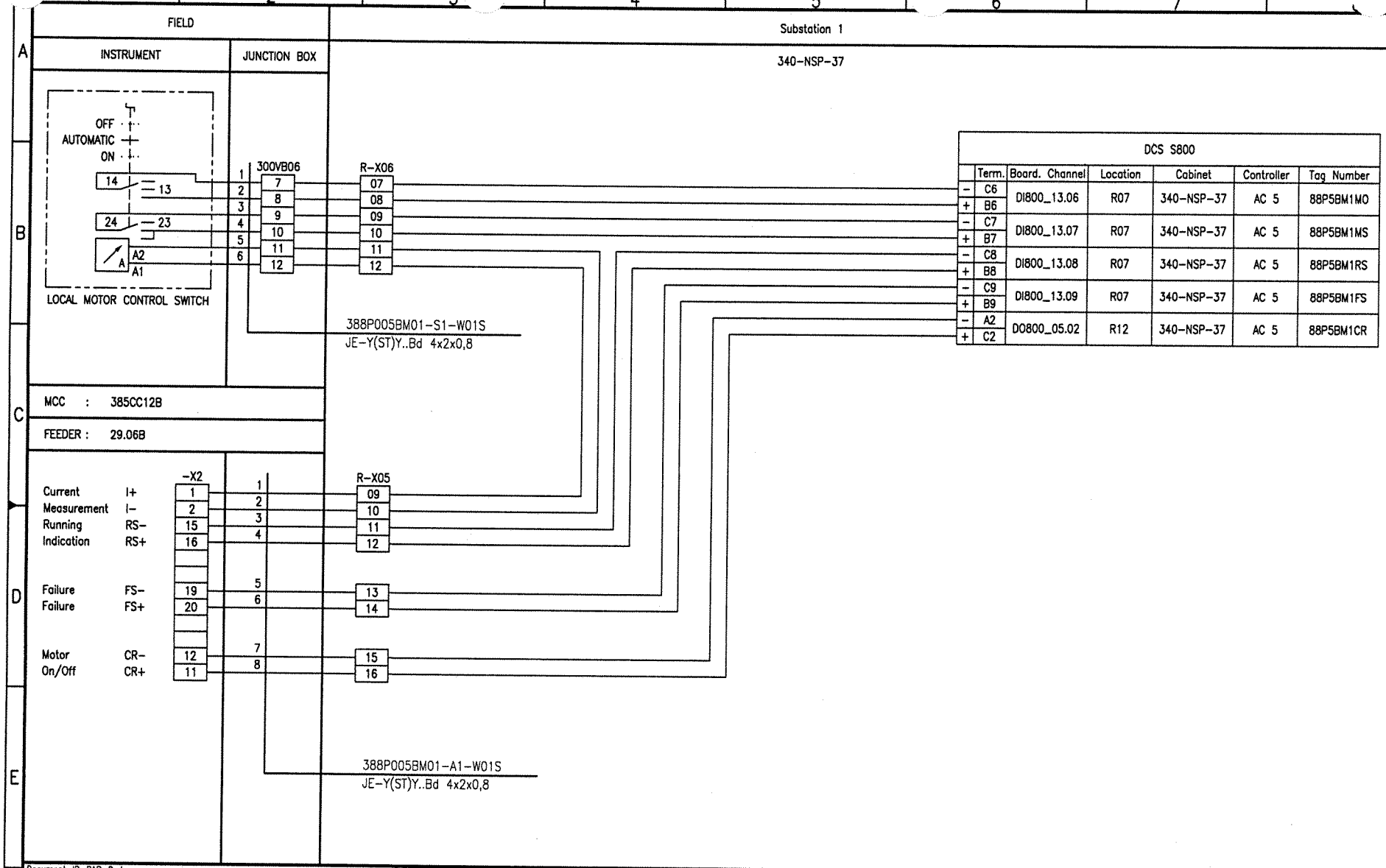

Document-ID-BAR-Code

Rev.	Date	Name (Drawn/Prepared)	Date	Name (Checked)	Date	Name (Approved)	Description	Acc. Code
01	20.09.06	Hie	20.09.06	Heuer	20.09.06	Heuer	AS BUILT	

UAN	Document ID	Part	Rev.	Group
01-3040	UD-EL-G00-FS-0001		01	

Code

Pro. Unit | TON | Cat. Code | Acc. Code | Status

Con. Unit | Type of Document: DH | Order No. | Scale | Tot. Sheets

	Date	Name
Drawn	08.04.2005	Hielscher
Prepared	08.04.2005	Hohmann
Checked	08.04.2005	Heuer
Approved	08.04.2005	Heuer

AMMONIA / UREA PROJECT SUEZ II

Uhde

All rights reserved © Uhde GmbH

Designation
Wiring diagram
388P005BM01

Store Location: Server \\p013040\013040-ADA
Store Location: Folder \Ei-ET\DH_el-wiring-diag\
Store Name 01-3040_388P005BM01_000_01.dwg

ISO A3

BORDER-A3_013040.dwg / A03A3_013040.dwg / 17.05.2004

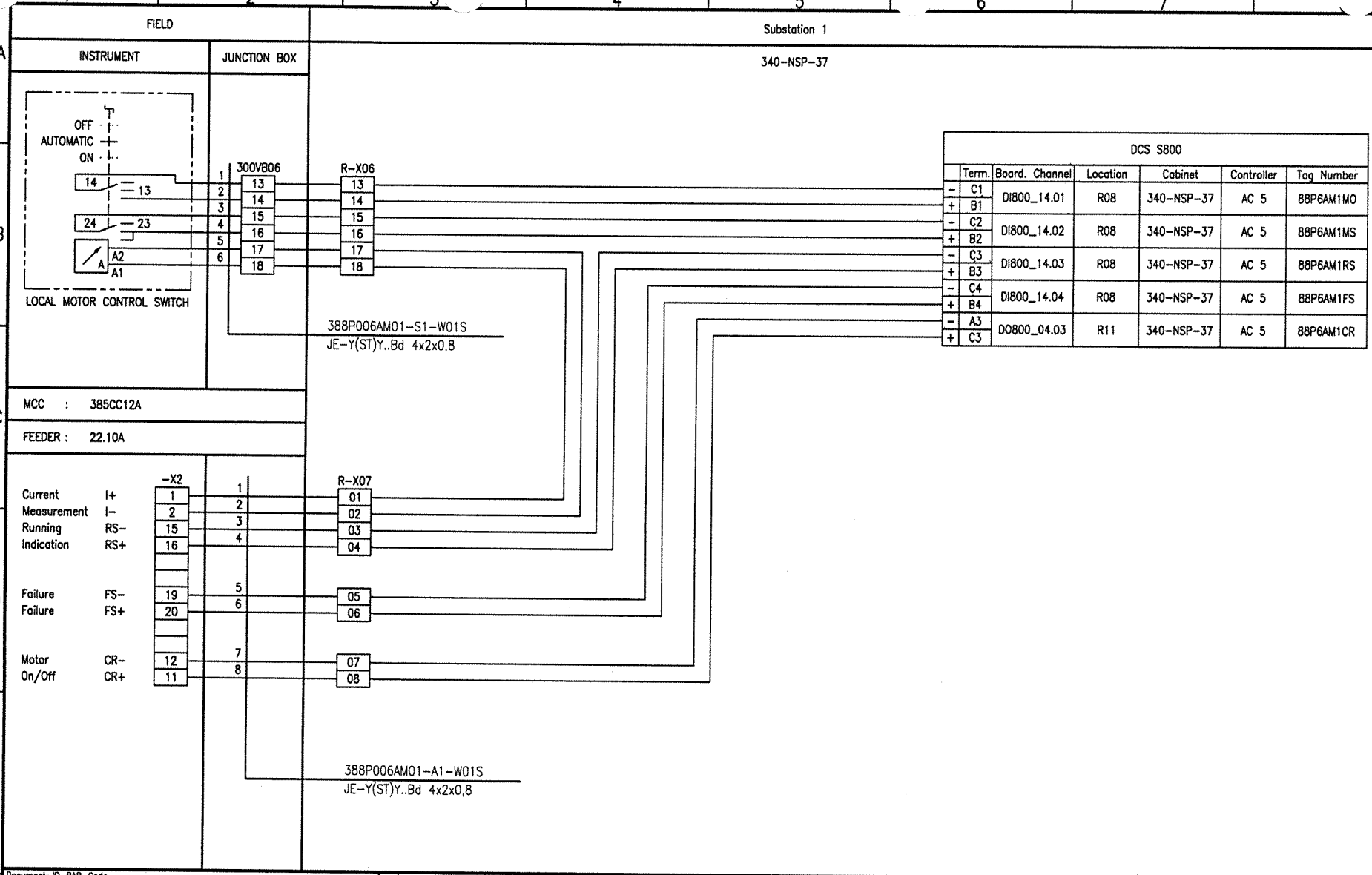

Document-ID-BAR-Code

Rev.	Date	Name (Drawn/Prepared)	Date	Name (Checked)	Date	Name (Approved)	Description	Acc. Code
01	20.09.06	Hie	20.09.06	Heuer	20.09.06	Heuer	AS BUILT	

UAN	Document ID	Part	Rev.	Group
01-3040	UD-EL-G00-FS-0001		01	

Code

Uhde

All rights reserved © Uhde GmbH

Pro. Unit | TON | Cat. Code | Acc. Code | Status

Con. Unit | Type of Document: DH | Order No. | Scale | Tot. Sheets

	Date	Name
Drawn	08.04.2005	Hielscher
Prepared	08.04.2005	Hohmann
Checked	08.04.2005	Heuer
Approved	08.04.2005	Heuer

AMMONIA / UREA PROJECT SUEZ II

Designation
Wiring diagram
388P006AM01

Store Location: Server \\p013040\013040-ADA
Store Location: Folder \EI-ET\DH_el-wiring-diag\
Store Name 01-3040_388P006AM01_000_01.dwg

ISO A3

BORDER-A3_013040.dwg / A03A3_013040.dwg / 17.05.2004

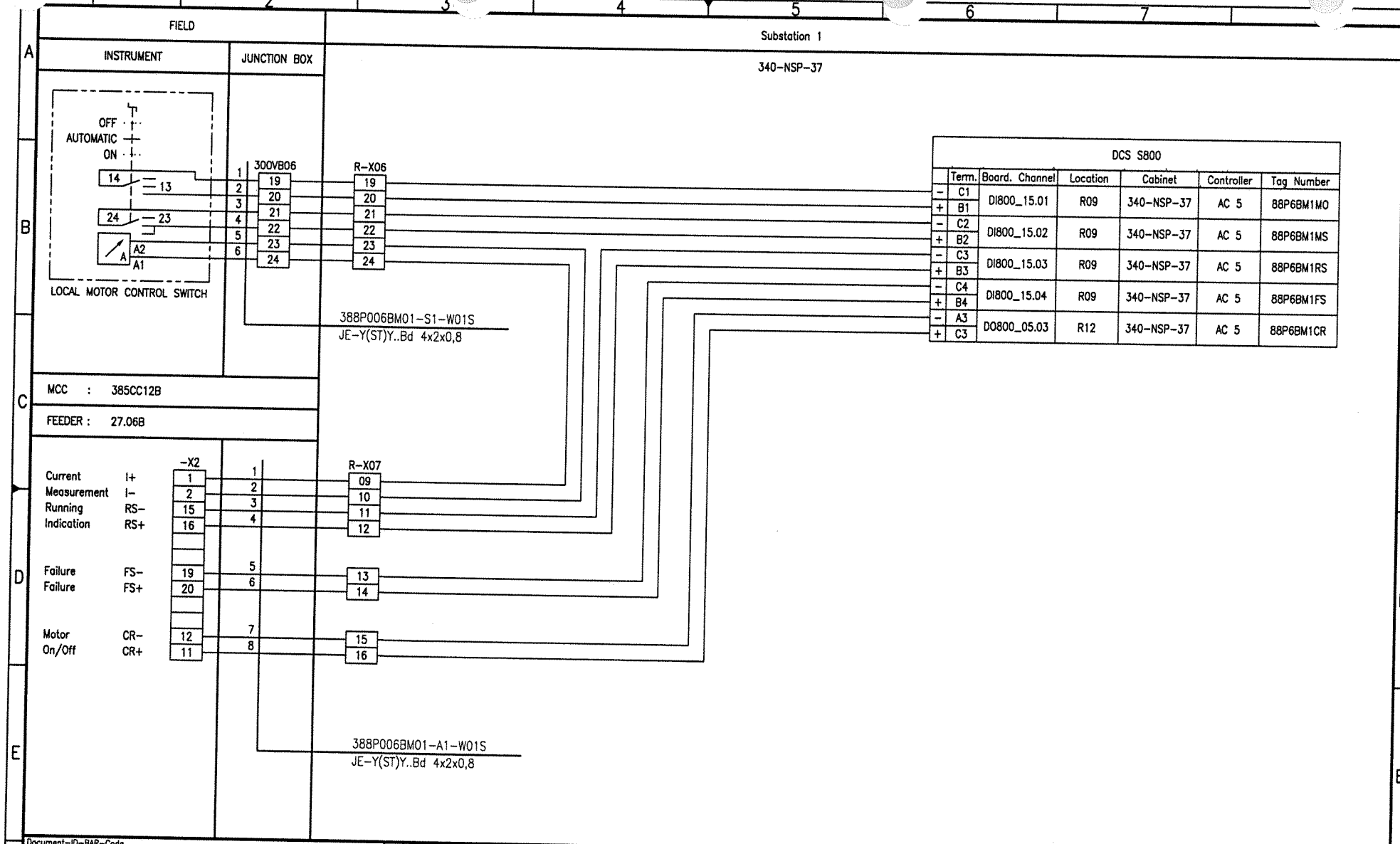

Document-ID-BAR-Code

Rev.	Date	Name (Drawn/Prepared)	Date	Name (Checked)	Date	Name (Approved)	Description	Acc. Code
01	20.09.06	Hie Hie	20.09.06	Heuer	20.09.06	Heuer	AS BUILT	

UAN	Code: Document ID	Part	Rev.	Group
01-3040	UD-EL-G00-FS-0001		01	

Uhde

All rights reserved © Uhde GmbH

Pro. Unit	TON	Cat. Code	Acc. Code	Status
Con. Unit	Type of Document: DH	Order No.	Scale	Tot. Sheets

	Date	Name
Drawn	08.04.2005	Hielscher
Prepared	08.04.2005	Hohmann
Checked	08.04.2005	Heuer
Approved	08.04.2005	Heuer

AMMONIA / UREA PROJECT SUEZ II

Designation: Wiring diagram 388P006BM01

Store Location: Server \\p013040\013040-ADA

Store Location: Folder \EI-ET\DH_el-wiring-diag\

Store Name: 01-3040_388P006BM01_000_01.dwg

ISO A3

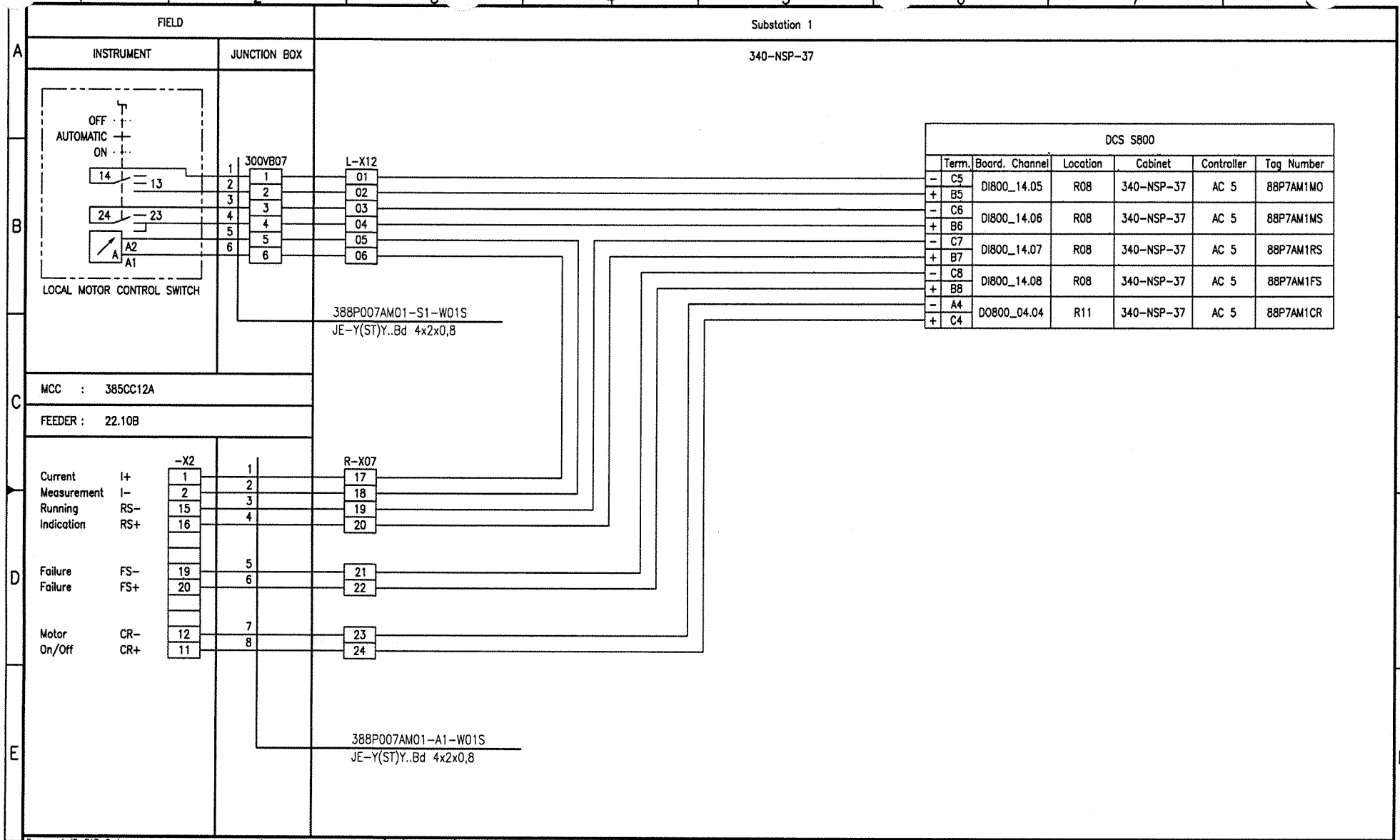

Document-ID-BAR-Code

Rev.	Date	Name (Drawn/Prepared)	Date	Name (Checked)	Date	Name (Approved)	Description	Acc. Code
01	20.09.06	Hie Hie	20.09.06	Heuer	20.09.06	Heuer	AS BUILT	

UAN	Document ID	Part	Rev.	Group
01-3040	UD-EL-G00-FS-0001		01	

Code

Uhde

All rights reserved © Uhde GmbH

Pro. Unit	TON	Cat. Code	Acc. Code	Status

Con. Unit	Type of Document	Order No.	Scale	Tot. Sheets
	DH			

	Date	Name
Drawn	08.04.2005	Hielscher
Prepared	08.04.2005	Hohmann
Checked	08.04.2005	Heuer
Approved	08.04.2005	Heuer

AMMONIA / UREA PROJECT SUEZ II

Designation
Wiring diagram
388P007AM01

Store Location: Server
\\p013040\013040-ADA

Store Location: Folder
\Ei-ET\DH_el-wiring-diag\

Store Name
01-3040_388P007AM01_000_01.dwg

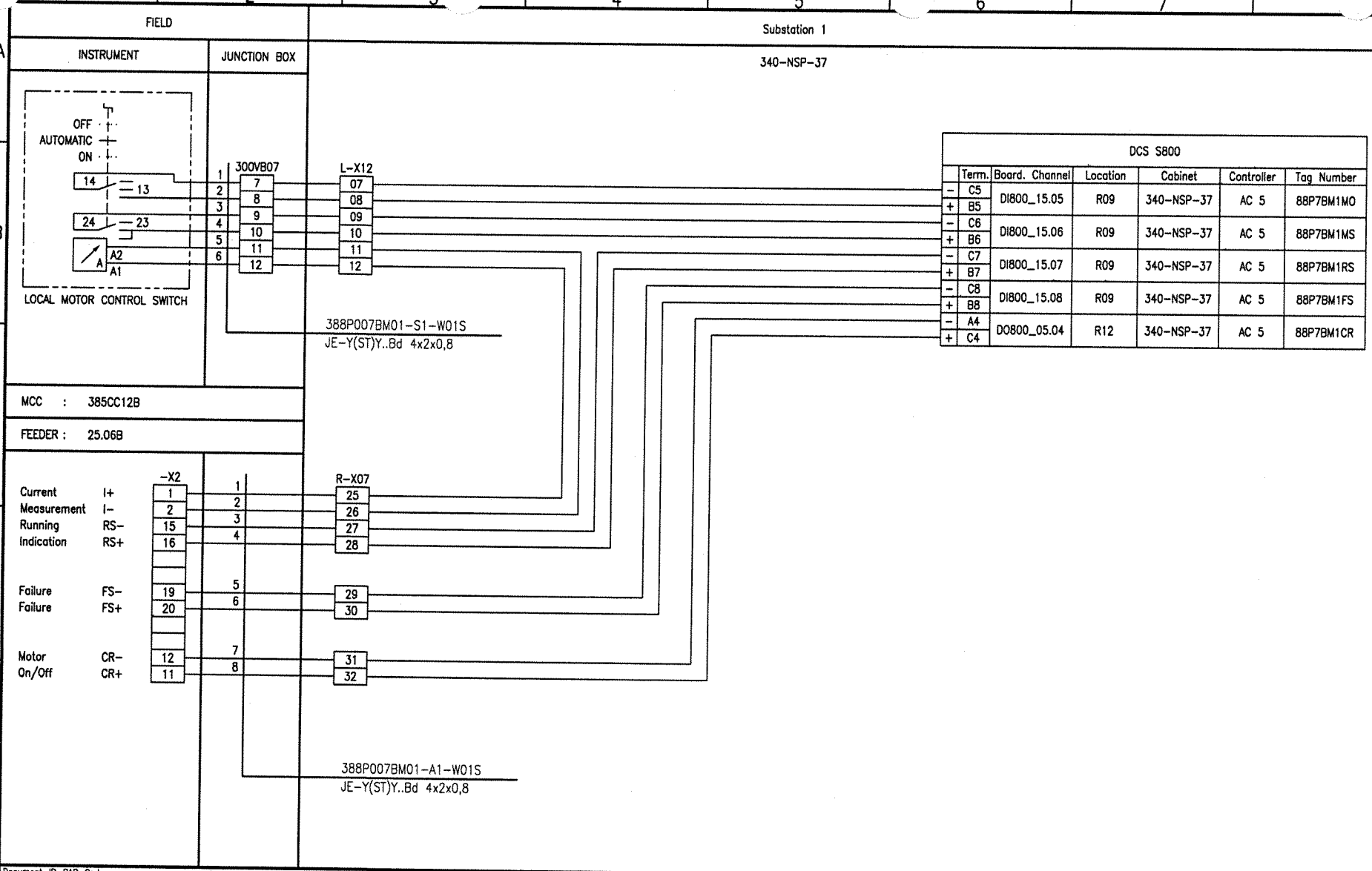

Document-ID-BAR-Code

Rev.	Date	Drawn/Prepared		Checked		Approved		Description	Acc. Code
01	20.09.06	Hie	Hie	20.09.06	Heuer	20.09.06	Heuer	AS BUILT	

UAN	Code: Document ID	Part	Rev.	Group
01-3040	UD-EL-G00-FS-0001		01	

Pro. Unit	TON	Cat. Code	Acc. Code	Status
Con. Unit	Type of Document: DH	Order No.	Scale	Tot. Sheets

	Date	Name
Drawn	08.04.2005	Hielscher
Prepared	08.04.2005	Hohmann
Checked	08.04.2005	Heuer
Approved	08.04.2005	Heuer

Store Location: Server \\p013040\013040-ADA
Store Location: Folder \EI-ET\DH_el-wiring-diag\
Store Name 01-3040_388P007BM01_000_01.dwg

Uhde

All rights reserved © Uhde GmbH

AMMONIA / UREA PROJECT SUEZ II

Designation
Wiring diagram
388P007BM01

ISO A3

BORDER-A3_013040.dwg / A03A3_013040.dwg / 17.05.2004

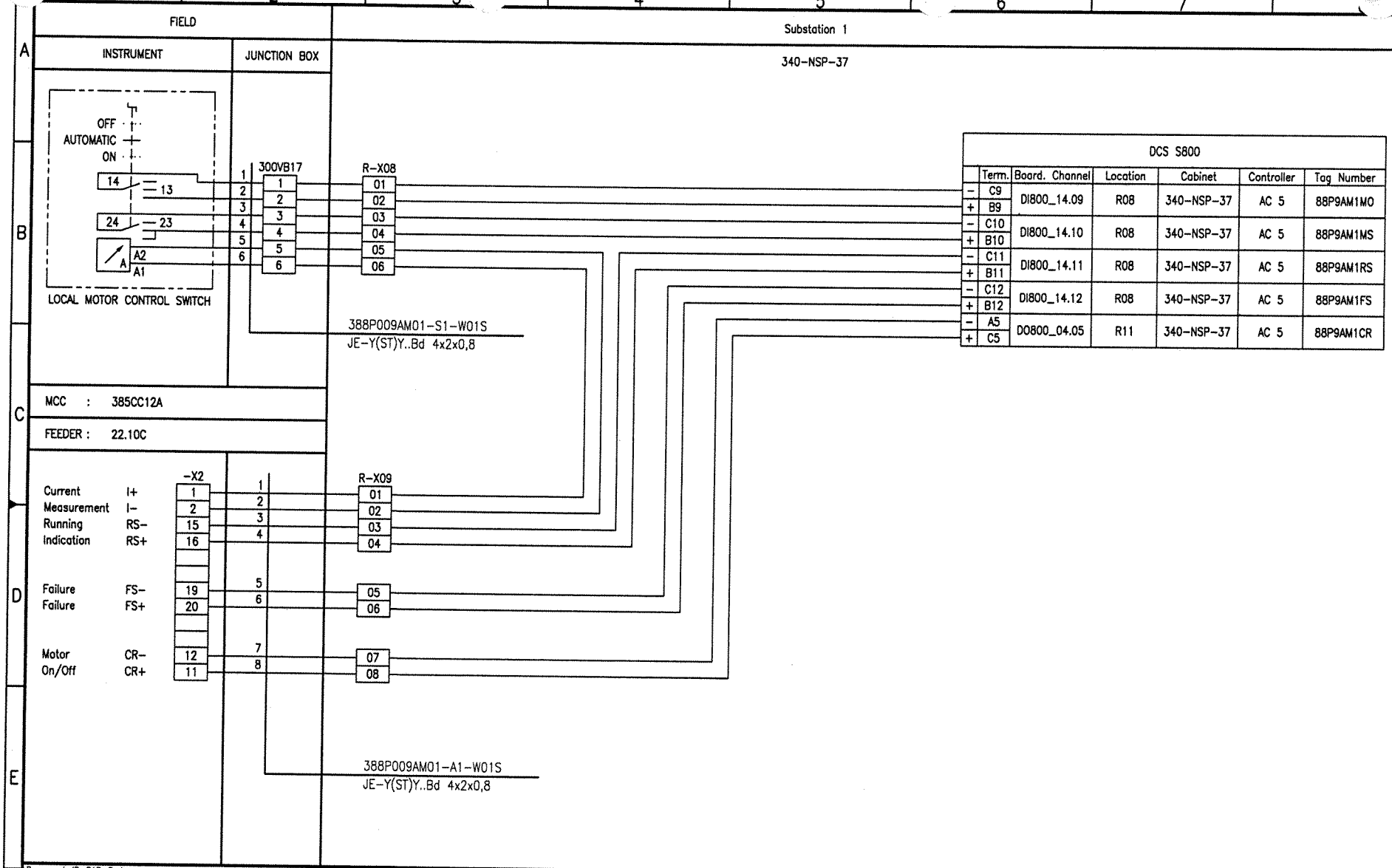

Document-ID-BAR-Code

Rev.	Date	Name (Drawn/Prepared)	Date	Name (Checked)	Date	Name (Approved)	Description	Acc. Code
01	20.09.06	Hie Hie	20.09.06	Heuer	20.09.06	Heuer	AS BUILT	

UAN	Document ID	Part	Rev.	Group
01-3040	UD-EL-G00-FS-0001		01	

Code

Uhde

All rights reserved © Uhde GmbH

Pro. Unit	TON	Cat. Code	Acc. Code	Status
Con. Unit	Type of Document: DH	Order No.	Scale	Tot. Sheets

	Date	Name
Drawn	08.04.2005	Hielscher
Prepared	08.04.2005	Hohmann
Checked	08.04.2005	Heuer
Approved	08.04.2005	Heuer

AMMONIA / UREA PROJECT SUEZ II

Designation
Wiring diagram
388P009AM01

Store Location: Server \\p013040\013040-ADA
Store Location: Folder \Ei-ET\DH_el-wiring-diag\
Store Name 01-3040_388P009AM01_000_01.dwg

ISO A3

BORDER-A3_013040.dwg / A0G3A3_013040.dwg / 17.05.2004

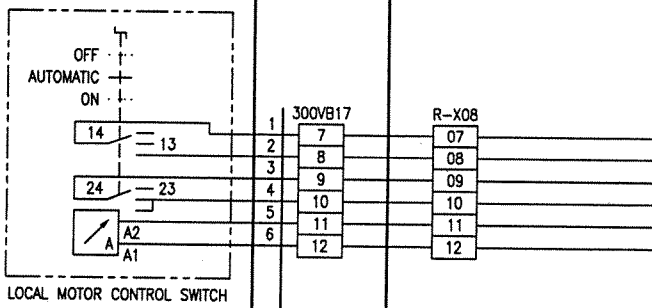

Document-ID-BAR-Code

Rev.	Date	Name (Drawn/Prepared)	Date	Name (Checked)	Date	Name (Approved)	Description	Acc. Code
01	20.09.06	Hie Hie	20.09.06	Heuer	20.09.06	Heuer	AS BUILT	

UAN	Code: Document ID	Part	Rev.	Group
01-3040	UD-EL-G00-FS-0001		01	

Uhde

All rights reserved © Uhde GmbH

Pro. Unit	TON	Cat. Code	Acc. Code	Status
Con. Unit	Type of Document: DH	Order No.	Scale	Tot. Sheets

	Date	Name
Drawn	08.04.2005	Hielscher
Prepared	08.04.2005	Hohmann
Checked	08.04.2005	Heuer
Approved	08.04.2005	Heuer

AMMONIA / UREA PROJECT SUEZ II

Designation: Wiring diagram 388P009BM01

Store Location: Server \\p013040\013040-ADA
Store Location: Folder \Ei-ET\DH_ei-wiring-diag\
Store Name: 01-3040_388P009BM01_000_01.dwg

ISO A3

BORDER-A3_013040.dwg / A003A3_013040.dwg / 17.05.2004

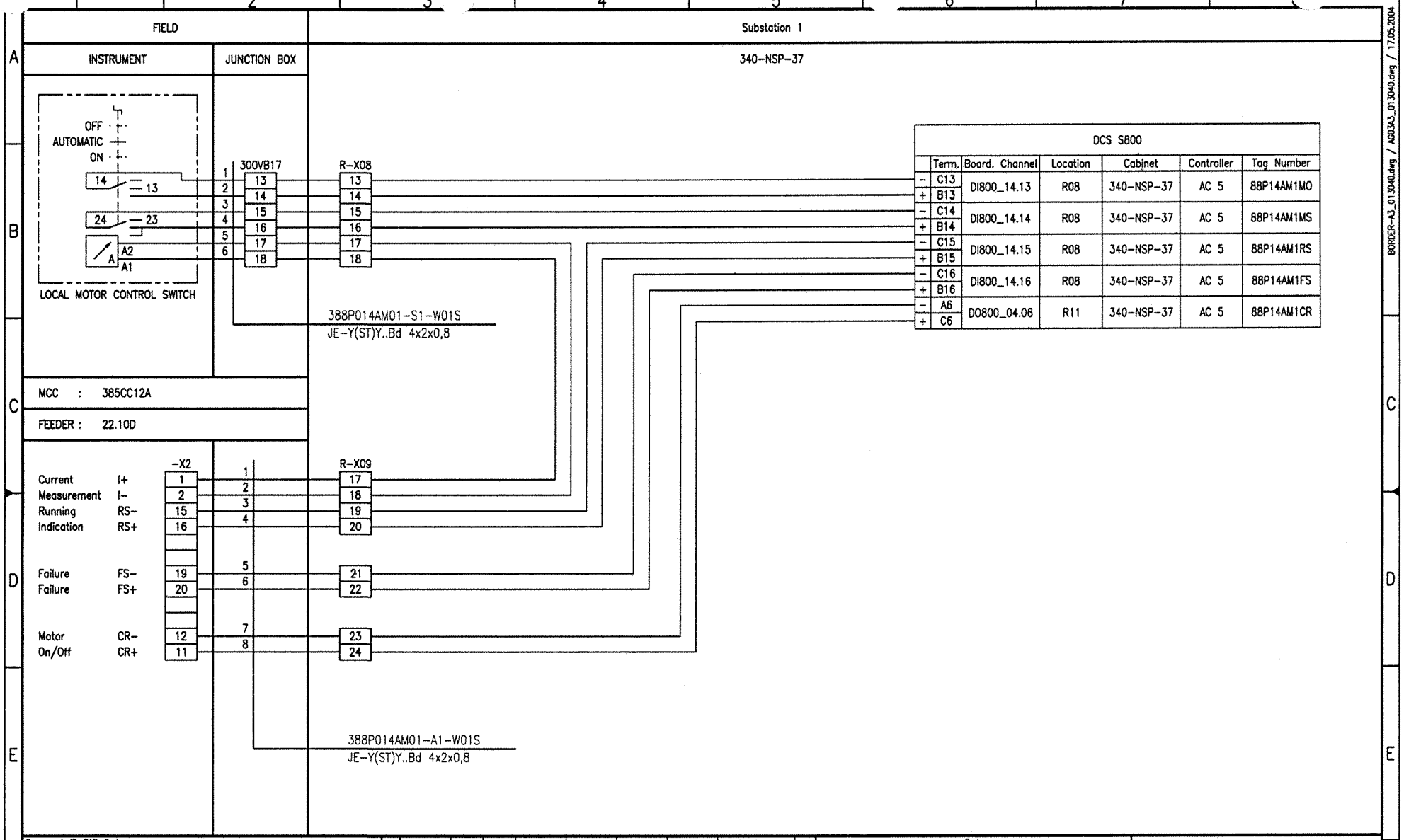

Document-ID-BAR-Code

Rev.	Date	Name (Drawn/Prepared)	Date	Name (Checked)	Date	Name (Approved)	Description	Acc. Code
01	20.09.06	Hie Hie	20.09.06	Heuer	20.09.06	Heuer	AS BUILT	

UAN	Document ID	Part	Rev.	Group
01-3040	UD-EL-G00-FS-0001		01	

Code

Uhde

All rights reserved © Uhde GmbH

Pro. Unit	TON	Cat. Code	Acc. Code	Status

Con. Unit	Type of Document	Order No.	Scale	Tot. Sheets
	DH			

	Date	Name
Drawn	08.04.2005	Hielscher
Prepared	08.04.2005	Hohmann
Checked	08.04.2005	Heuer
Approved	08.04.2005	Heuer

AMMONIA / UREA PROJECT SUEZ II

Designation
Wiring diagram
388P014AM01

Store Location: Server
\\p013040\013040-ADA

Store Location: Folder
\EI-ET\DH_el-wiring-diag\

Store Name
01-3040_388P014AM01_000_01.dwg

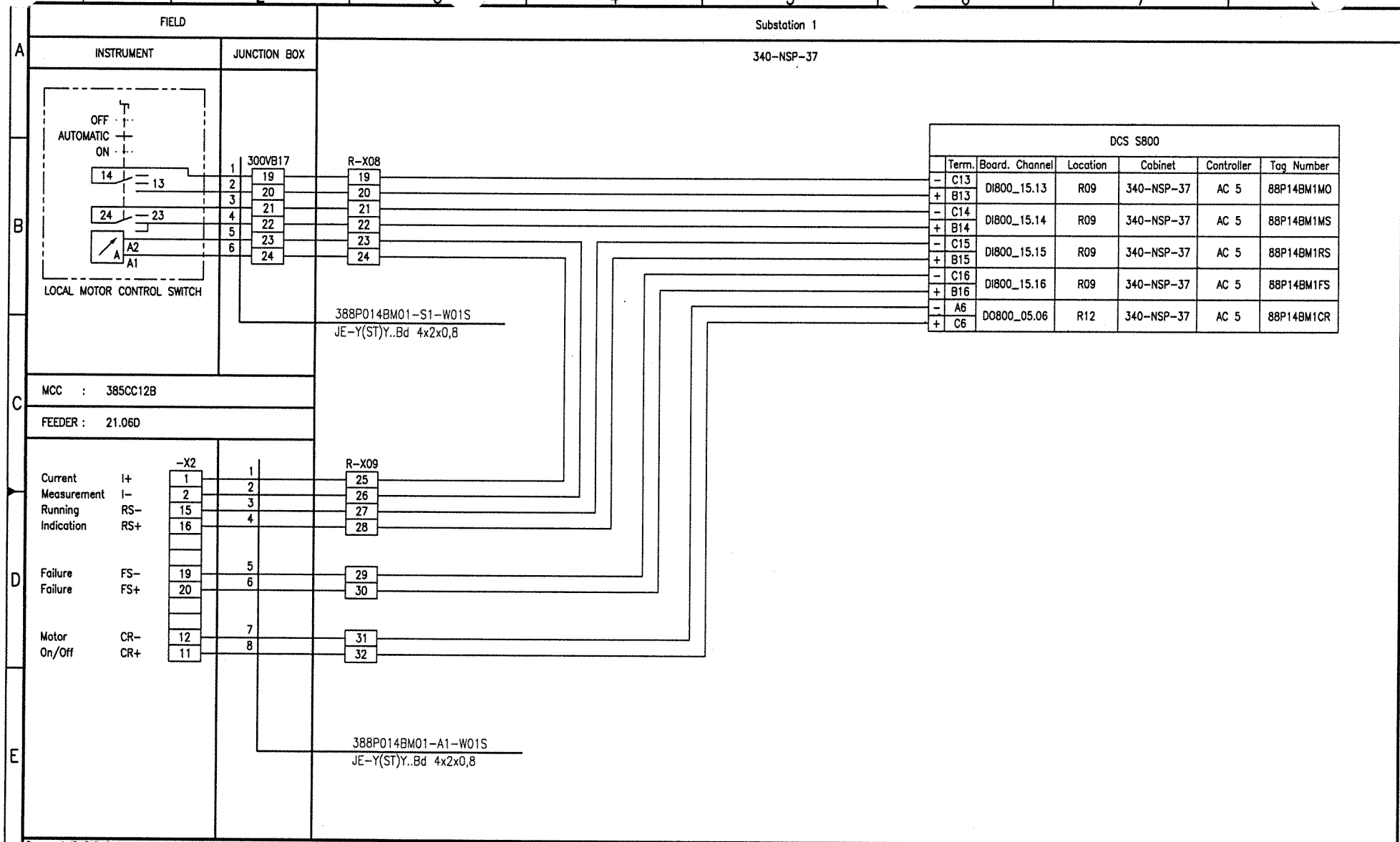

Document-ID-BAR-Code

Rev.	Date	Name (Drawn/Prepared)	Date	Name (Checked)	Date	Name (Approved)	Description	Acc. Code
01	20.09.06	Hie Hie	20.09.06	Heuer	20.09.06	Heuer	AS BUILT	

Pro. Unit	TON	Cat. Code	Acc. Code	Status
Con. Unit	Type of Document: DH	Order No.	Scale	Tot. Sheets

	Date	Name
Drawn	08.04.2005	Hielscher
Prepared	08.04.2005	Hohmann
Checked	08.04.2005	Heuer
Approved	08.04.2005	Heuer

Store Location: Server \\p013040\013040-ADA
Store Location: Folder \Ei-ET\DH_el-wiring-diag\
Store Name 01-3040_388P014BM01_000_01.dwg

UAN 01-3040
Code: Document ID UD-EL-G00-FS-0001 | Part | Rev. 01 | Group

Uhde

All rights reserved © Uhde GmbH

AMMONIA / UREA PROJECT SUEZ II

Designation
Wiring diagram
388P014BM01

ISO A3

CONTENTS

Loop Index (S 800 MOTORS) Processunit 389
Raw Water Treatment

Tag No.	Rev.	Crossreference: See	Remarks	File No.
389P002-M01	01			
389P003AM01	01			
389P003BM01	01			
389P003CM01	01			

I:\Ei-EFDH_el-wiring-diag\01-3040_Wiring_diagrams_coversheet_01.doc

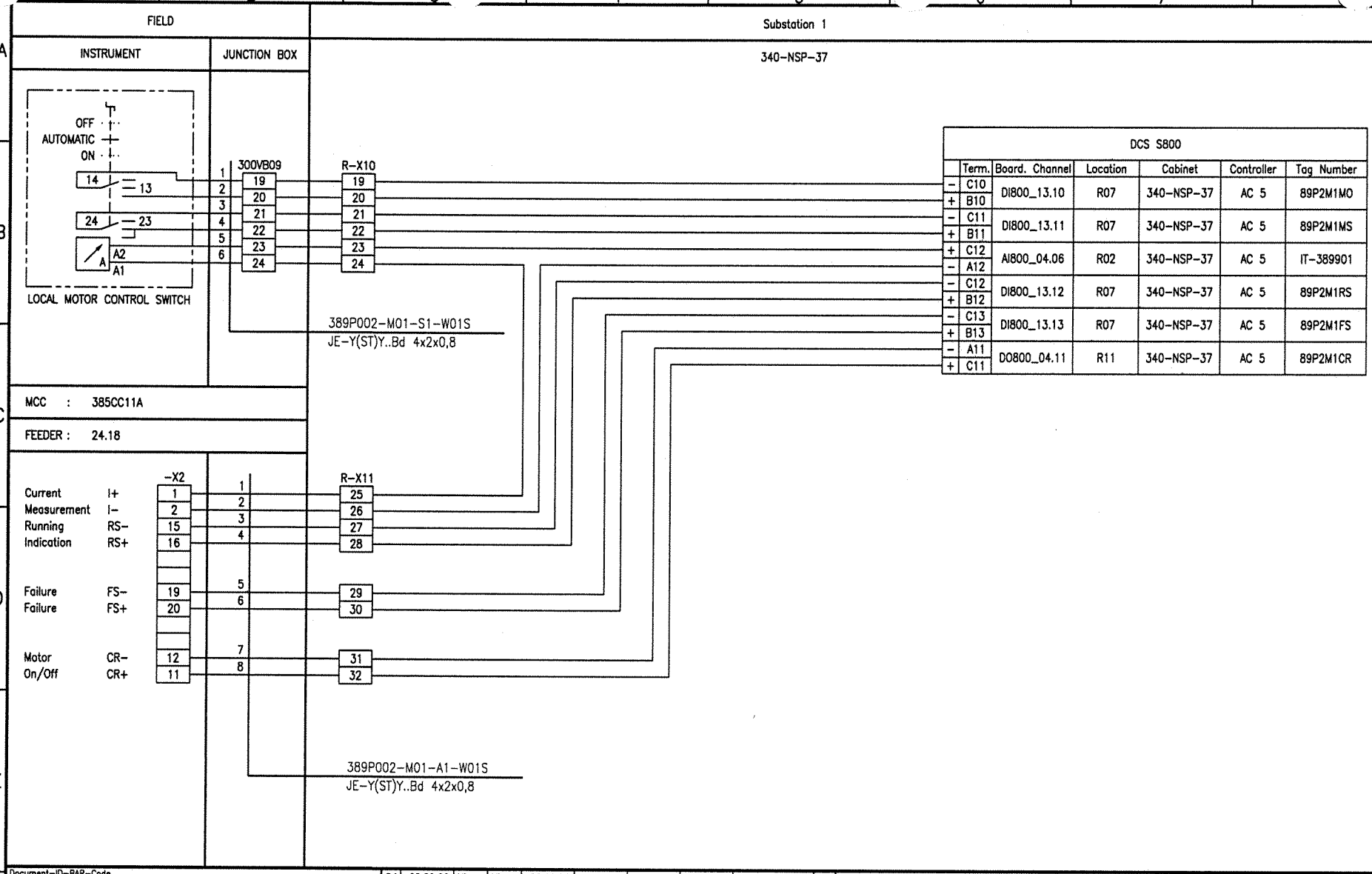

Document-ID-BAR-Code

Rev.	Date	Name	Date	Name	Date	Name	Description	Acc. Code
01	20.09.06	Hie	20.09.06	Heuer	20.09.06	Heuer	AS BUILT	
	Drawn/Prepared		Checked		Approved			

UAN	Code: Document ID	Part	Rev.	Group
01-3040	UD-EL-G00-FS-0001		01	

Pro. Unit: TON | Cat. Code | Acc. Code | Status

Con. Unit | Type of Document: DH | Order No. | Scale | Tot. Sheets

	Date	Name
Drawn	08.04.2005	Hielscher
Prepared	08.04.2005	Hohmann
Checked	08.04.2005	Heuer
Approved	08.04.2005	Heuer

Store Location: Server: \\p013040\013040-ADA
Store Location: Folder: \EI-ET\DH_el-wiring-diag\
Store Name: 01-3040_389P002-M01_000_01.dwg

AMMONIA / UREA PROJECT SUEZ II

Designation: Wiring diagram 389P002-M01

Uhde

All rights reserved © Uhde GmbH

ISO A3

BORDER-A3_013040.dwg / A03A3_013040.dwg / 17.05.2004

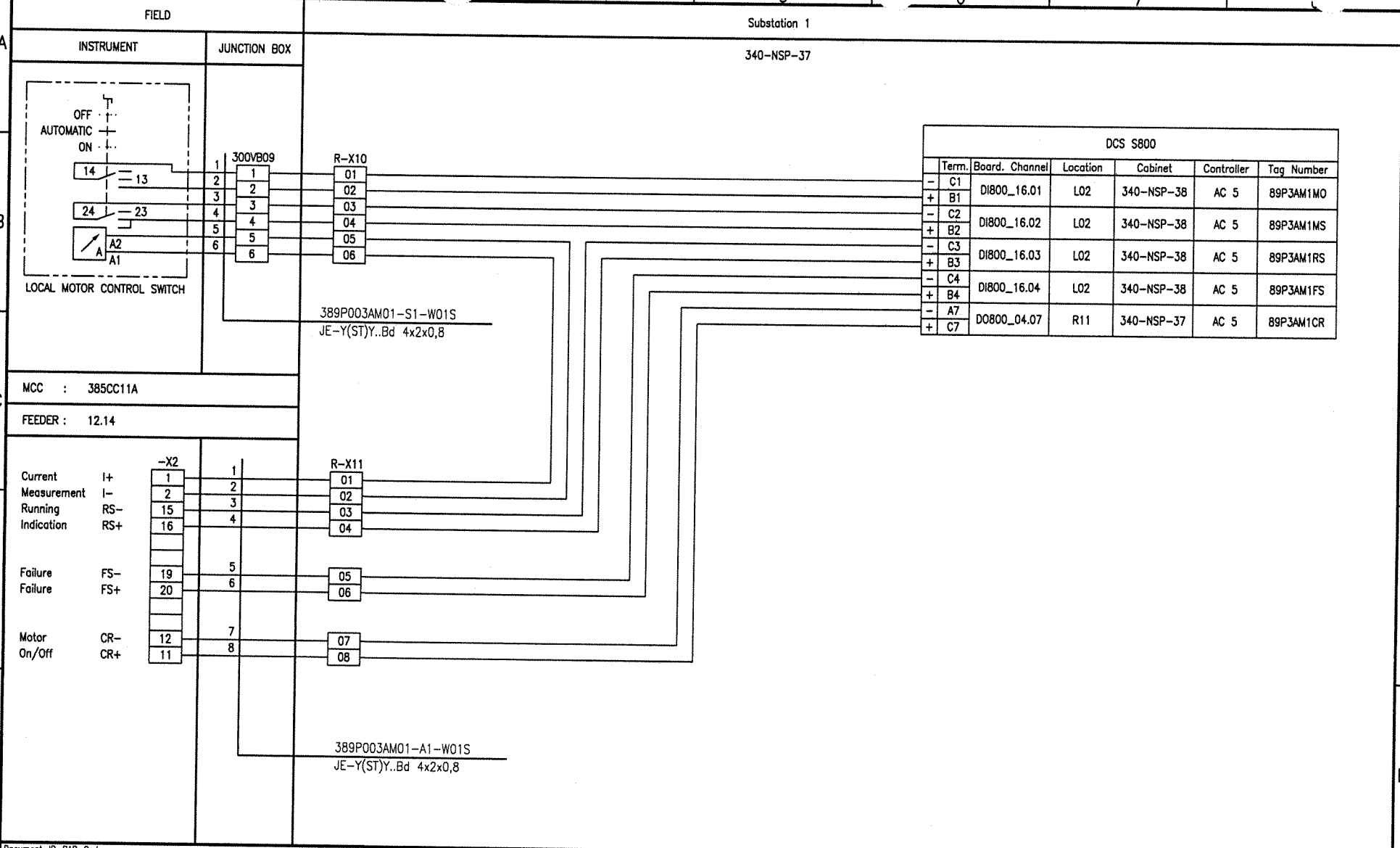

Document-ID-BAR-Code

Rev.	Date	Name (Drawn/Prepared)	Date	Name (Checked)	Date	Name (Approved)	Description	Acc. Code
01	20.09.06	Hie Hie	20.09.06	Heuer	20.09.06	Heuer	AS BUILT	

UAN	Document ID	Part	Rev.	Group
01-3040	UD-EL-G00-FS-0001		01	

Code

Uhde

All rights reserved © Uhde GmbH

Pro. Unit	TON	Cat. Code	Acc. Code	Status
Con. Unit	Type of Document: DH	Order No.	Scale	Tot. Sheets

	Date	Name
Drawn	08.04.2005	Hielscher
Prepared	08.04.2005	Hohmann
Checked	08.04.2005	Heuer
Approved	08.04.2005	Heuer

AMMONIA / UREA PROJECT SUEZ II

Designation
Wiring diagram
389P003AM01

Store Location: Server \\p013040\013040-ADA
Store Location: Folder \Ei-ET\DH_el-wiring-diag\
Store Name 01-3040_389P003AM01_000_01.dwg

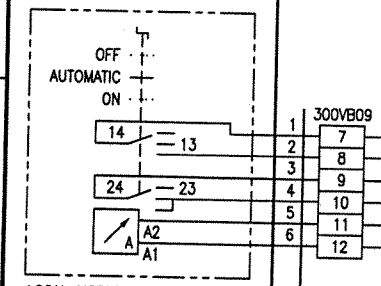

FIELD

INSTRUMENT | JUNCTION BOX

Substation 1

340-NSP-37

300VB09

R-X10

389P003BM01-S1-W01S
JE-Y(ST)Y..Bd 4x2x0,8

MCC : 385CC11B

FEEDER : 29.08

-X2

R-X11

		-X2		R-X11
Current Measurement	I+	1	1	09
	I-	2	2	10
Running Indication	RS-	15	3	11
	RS+	16	4	12
Failure	FS-	19	5	13
Failure	FS+	20	6	14
Motor On/Off	CR-	12	7	15
	CR+	11	8	16

389P003BM01-A1-W01S
JE-Y(ST)Y..Bd 4x2x0,8

DCS S800

	Term.	Board. Channel	Location	Cabinet	Controller	Tag Number
-	C1	DI800_17.01	L03	340-NSP-38	AC 5	89P3BM1MO
+	B1					
-	C2	DI800_17.02	L03	340-NSP-38	AC 5	89P3BM1MS
+	B2					
-	C3	DI800_17.03	L03	340-NSP-38	AC 5	89P3BM1RS
+	B3					
-	C4	DI800_17.04	L03	340-NSP-38	AC 5	89P3BM1FS
+	B4					
-	A7	DO800_05.07	R12	340-NSP-37	AC 5	89P3BM1CR
+	C7					

Document-ID-BAR-Code

Rev.	Date	Name (Drawn/Prepared)	Date	Name (Checked)	Date	Name (Approved)	Description	Acc. Code
01	20.09.06	Hie Hie	20.09.06	Heuer	20.09.06	Heuer	AS BUILT	

UAN	Document ID	Part	Rev.	Group
01-3040	UD-EL-G00-FS-0001		01	

Code

Pro. Unit: TON | Cat. Code | Acc. Code | Status

Con. Unit | Type of Document: DH | Order No. | Scale | Tot. Sheets

	Date	Name
Drawn	08.04.2005	Hielscher
Prepared	08.04.2005	Hohmann
Checked	08.04.2005	Heuer
Approved	08.04.2005	Heuer

Store Location: Server \\p013040\013040-ADA

Store Location: Folder \EI-ET\DH_el-wiring-diag\

Store Name 01-3040_389P003BM01_000_01.dwg

AMMONIA / UREA PROJECT SUEZ II

Uhde

All rights reserved © Uhde GmbH

Designation
Wiring diagram
389P003BM01

ISO A3

BORDER-A3_013040.dwg / AG03A3_013040.dwg / 17.05.2004

FIELD

INSTRUMENT | JUNCTION BOX

Substation 1

340-NSP-37

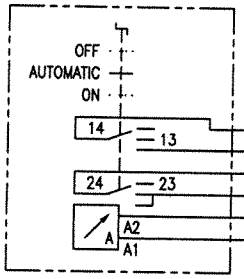

LOCAL MOTOR CONTROL SWITCH

300VB09

R-X10

389P003CM01-S1-W01S
JE-Y(ST)Y..Bd 4x2x0,8

MCC : 385CC11B

FEEDER : 29.10

-X2

R-X11

		-X2	300VB09	R-X11
Current Measurement	I+	1	1	17
	I-	2	2	18
Running Indication	RS-	15	3	19
	RS+	16	4	20
Failure	FS-	19	5	21
Failure	FS+	20	6	22
Motor On/Off	CR-	12	7	23
	CR+	11	8	24

389P003CM01-A1-W01S
JE-Y(ST)Y..Bd 4x2x0,8

DCS S800

	Term.	Board. Channel	Location	Cabinet	Controller	Tag Number
-	C1	DI800_18.01	L04	340-NSP-38	AC 5	89P3CM1MO
+	B1					
-	C2	DI800_18.02	L04	340-NSP-38	AC 5	89P3CM1MS
+	B2					
-	C3	DI800_18.03	L04	340-NSP-38	AC 5	89P3CM1RS
+	B3					
-	C4	DI800_18.04	L04	340-NSP-38	AC 5	89P3CM1FS
+	B4					
-	A8	DO800_03.08	R10	340-NSP-37	AC 5	89P3CM1CR
+	C8					

Document-ID-BAR-Code

Rev.	Date	Name	Date	Name	Date	Name	Description	Acc. Code
01	20.09.06	Hie	20.09.06	Heuer	20.09.06	Heuer	AS BUILT	
	Drawn/Prepared		Checked		Approved			

UAN	Code: Document ID	Part	Rev.	Group
01-3040	UD-EL-G00-FS-0001		01	

Uhde

All rights reserved © Uhde GmbH

Pro. Unit	TON	Cat. Code	Acc. Code	Status
Con. Unit	Type of Document: DH	Order No.	Scale	Tot. Sheets

	Date	Name
Drawn	08.04.2005	Hielscher
Prepared	08.04.2005	Hohmann
Checked	08.04.2005	Heuer
Approved	08.04.2005	Heuer

AMMONIA / UREA PROJECT SUEZ II

Designation: Wiring diagram 389P003CM01

Store Location: Server \\p013040\013040-ADA

Store Location: Folder \EI-ET\DH_el-wiring-diag\

Store Name: 01-3040_389P003CM01_000_01.dwg

ISO A3

BORDER-A3_013040.dwg / A003A3_013040.dwg / 17.05.2004

CONTENTS

Loop Index (S 800 MOTORS) Processunit 390 Demineralization

Demineralization Tag No.	Rev.	Crossreference: See	Remarks	File No.
390D005-EH1	01			
390K001AM01	01			
390K001BM01	01			
390K002-M01	01			
390P001AM01	01			
390P001BM01	01			
390P002AM01	01			
390P002BM01	01			
390P002CM01	01			
390P003AM01	01			
390P003BM01	01			
390P003CM01	01			
390P004AM01	01			
390P004BM01	01			
390P005AM01	01			
390P005BM01	01			
390P006AM01	01			
390P006BM01	01			
390P007-M01	01			
390P008-M01	01			
390P009AM01	01			
390P009BM01	01			
390P014AM01	01			
390P014BM01	01			
390P015AM01	01			
390P015BM01	01			
390P017-M01	01			
390P018-M01	01			

I:\Ej-EP\DH_el-wiring-diag\01-3040_Wiring_diagrams_coversheet_01.doc

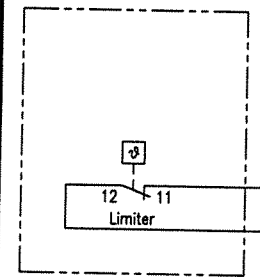

Document-ID-BAR-Code	Rev.	Date	Name	Drawn/Prepared	Date	Name	Checked	Date	Name	Approved	Description	Acc. Code
	01	20.09.06	Hie	Hie	20.09.06	Heuer		20.09.06	Heuer		AS BUILT	

Pro. Unit	TON	Cat. Code	Acc. Code	Status
Con. Unit	Type of Document: DH	Order No.	Scale	Tot. Sheets

	Date	Name
Drawn	08.04.2005	Hielscher
Prepared	08.04.2005	Hohmann
Checked	08.04.2005	Heuer
Approved	08.04.2005	Heuer

UAN	Code: Document ID	Part	Rev.	Group
01-3040	UD-EL-G00-FS-0001		01	

Uhde

All rights reserved © Uhde GmbH

AMMONIA / UREA PROJECT SUEZ II

Designation: Wiring diagram 390D005-EH1

Store Location: Server \\p013040\013040-ADA

Store Location: Folder \EI-ET\DH_el-wiring-diag\

Store Name: 01-3040_390D005-EH1_000_01.dwg

ISO A3

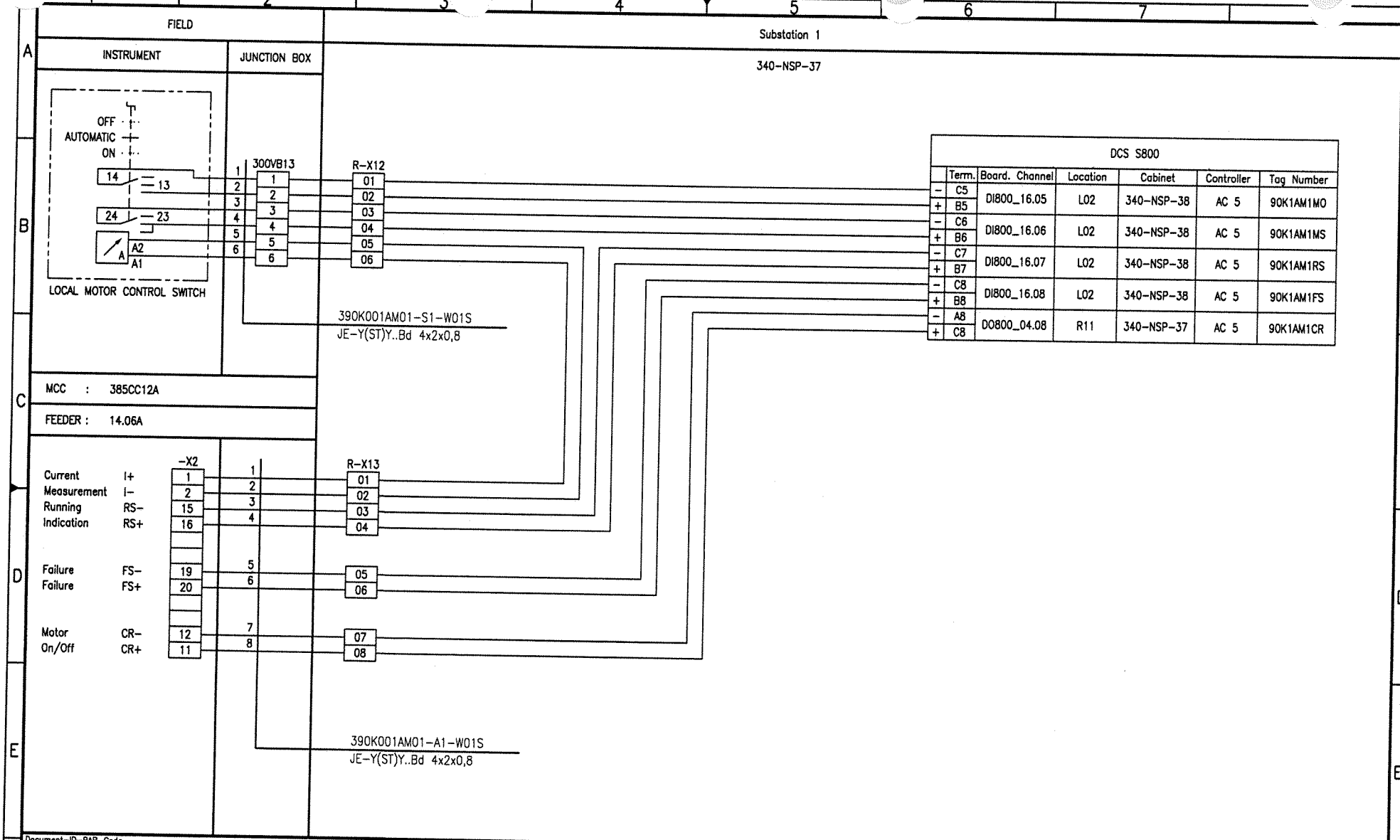

Document-ID-BAR-Code

Rev.	Date	Name (Drawn/Prepared)	Date	Name (Checked)	Date	Name (Approved)	Description	Acc. Code
01	20.09.06	Hie Hie	20.09.06	Heuer	20.09.06	Heuer	AS BUILT	

UAN	Document ID	Part	Rev.	Group
01-3040	UD-EL-G00-FS-0001		01	

Code

Uhde

All rights reserved © Uhde GmbH

Pro. Unit	TON	Cat. Code	Acc. Code	Status
Con. Unit	Type of Document: DH	Order No.	Scale	Tot. Sheets

	Date	Name
Drawn	08.04.2005	Hielscher
Prepared	08.04.2005	Hohmann
Checked	08.04.2005	Heuer
Approved	08.04.2005	Heuer

AMMONIA / UREA PROJECT SUEZ II

Designation
Wiring diagram
390K001AM01

Store Location: Server
\\p013040\013040-ADA

Store Location: Folder
\EI-ET\DH_el-wiring-diag\

Store Name
01-3040_390K001AM01_000_01.dwg

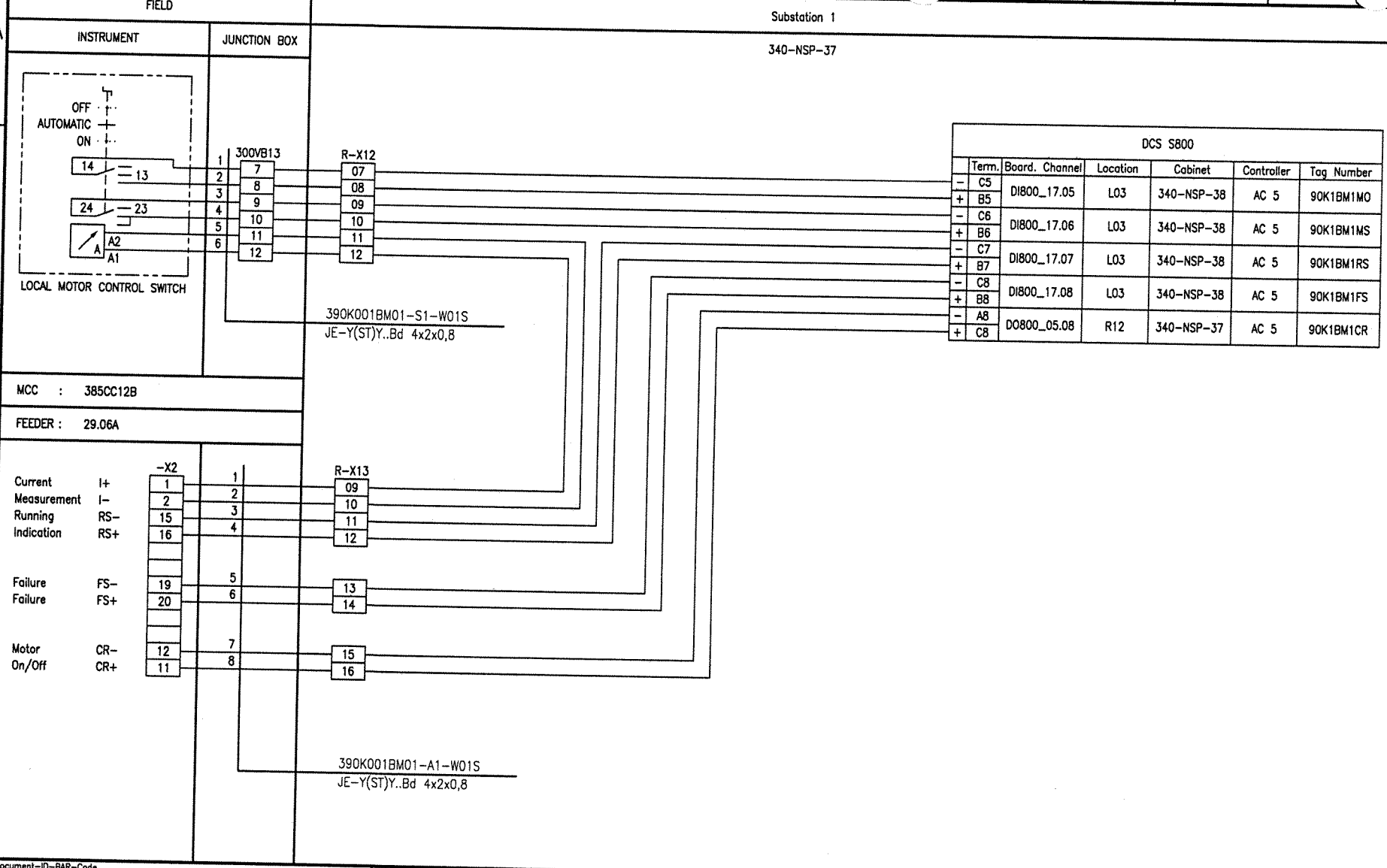
FIELD
INSTRUMENT
JUNCTION BOX
Substation 1
340-NSP-37
OFF
AUTOMATIC
ON
14
13
24
23
A2
A1
LOCAL MOTOR CONTROL SWITCH
300VB13
R-X12
390K001BM01-S1-W01S
JE-Y(ST)Y..Bd 4x2x0,8
MCC : 385CC12B
FEEDER : 29.06A
-X2
Current Measurement I+ I-
Running Indication RS- RS+
Failure FS- Failure FS+
Motor On/Off CR- CR+
R-X13
390K001BM01-A1-W01S
JE-Y(ST)Y..Bd 4x2x0,8
DCS S800
Term. Board. Channel Location Cabinet Controller Tag Number
C5 B5 DI800_17.05 L03 340-NSP-38 AC 5 90K1BM1MO
C6 B6 DI800_17.06 L03 340-NSP-38 AC 5 90K1BM1MS
C7 B7 DI800_17.07 L03 340-NSP-38 AC 5 90K1BM1RS
C8 B8 DI800_17.08 L03 340-NSP-38 AC 5 90K1BM1FS
A8 C8 DO800_05.08 R12 340-NSP-37 AC 5 90K1BM1CR
Document-ID-BAR-Code
01 20.09.06 Hie Hie 20.09.06 Heuer 20.09.06 Heuer AS BUILT
Rev. Date Name Drawn/Prepared Date Name Checked Date Name Approved Description Acc. Code
UAN 01-3040
Code Document ID UD-EL-G00-FS-0001 Part Rev. 01 Group
Uhde
All rights reserved © Uhde GmbH
Pro. Unit TON Cat. Code Acc. Code Status
Con. Unit Type of Document DH Order No. Scale Tot. Sheets
Drawn 08.04.2005 Hielscher
Prepared 08.04.2005 Hohmann
Checked 08.04.2005 Heuer
Approved 08.04.2005 Heuer
AMMONIA / UREA PROJECT SUEZ II
Designation Wiring diagram 390K001BM01
Store Location: Server \\p013040\013040-ADA
Store Location: Folder \EI-ET\DH_el-wiring-diag\
Store Name 01-3040_390K001BM01_000_01.dwg
ISO A3
BORDER-A3_013040.dwg / A0D3A3_013040.dwg / 17.05.2004

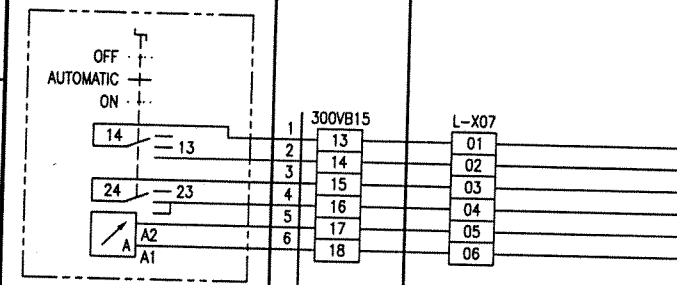
FIELD
INSTRUMENT
JUNCTION BOX
Substation 1
340-NSP-38
OFF
AUTOMATIC
ON
14
13
24
23
A2
A1
LOCAL MOTOR CONTROL SWITCH
300VB15
1
2
3
4
5
6
13
14
15
16
17
18
L-X07
01
02
03
04
05
06
390K002-M01-S1-W01S
JE-Y(ST)Y..Bd 4x2x0,8
: 385CC12A
FEEDER : 22.06C
-X2
Current Measurement I+ I-
Running Indication RS- RS+
Failure FS- Failure FS+
Motor On/Off CR- CR+
1
2
15
16
19
20
12
11
L-X08
01
02
03
04
05
06
07
08
390K002-M01-A1-W01S
JE-Y(ST)Y..Bd 4x2x0,8
DCS S800
Term. Board. Channel Location Cabinet Controller Tag Number
- C5 + B5 DI800_23.05 L09 340-NSP-38 AC 5 90K2M1MO
- C6 + B6 DI800_23.06 L09 340-NSP-38 AC 5 90K2M1MS
- C7 + B7 DI800_23.07 L09 340-NSP-38 AC 5 90K2M1RS
- C8 + B8 DI800_23.08 L09 340-NSP-38 AC 5 90K2M1FS
- A6 + C6 DO800_06.06 L11 340-NSP-38 AC 5 90K2M1CR
BORDER-A3_013040.dwg / A003A3_013040.dwg / 17.05.2004
Document-ID-BAR-Code
01 20.09.06 Hie Hie 20.09.06 Heuer 20.09.06 Heuer AS BUILT
Rev. Date Name Drawn/Prepared Date Name Checked Date Name Approved Description Acc. Code
UAN 01-3040
Code Document ID UD-EL-G00-FS-0001 Part Rev. 01 Group
Uhde
All rights reserved © Uhde GmbH
Pro. Unit TON Cat. Code Acc. Code Status
Con. Unit Type of Document DH Order No. Scale Tot. Sheets
Drawn 08.04.2005 Hielscher
Prepared 08.04.2005 Hohmann
Checked 08.04.2005 Heuer
Approved 08.04.2005 Heuer
AMMONIA / UREA PROJECT SUEZ II
Designation
Wiring diagram
390K002-M01
Store Location: Server \\p013040\013040-ADA
Store Location: Folder \EI-ET\DH_el-wiring-diag\
Store Name 01-3040_390K002-M01_000_01.dwg
ISO A3

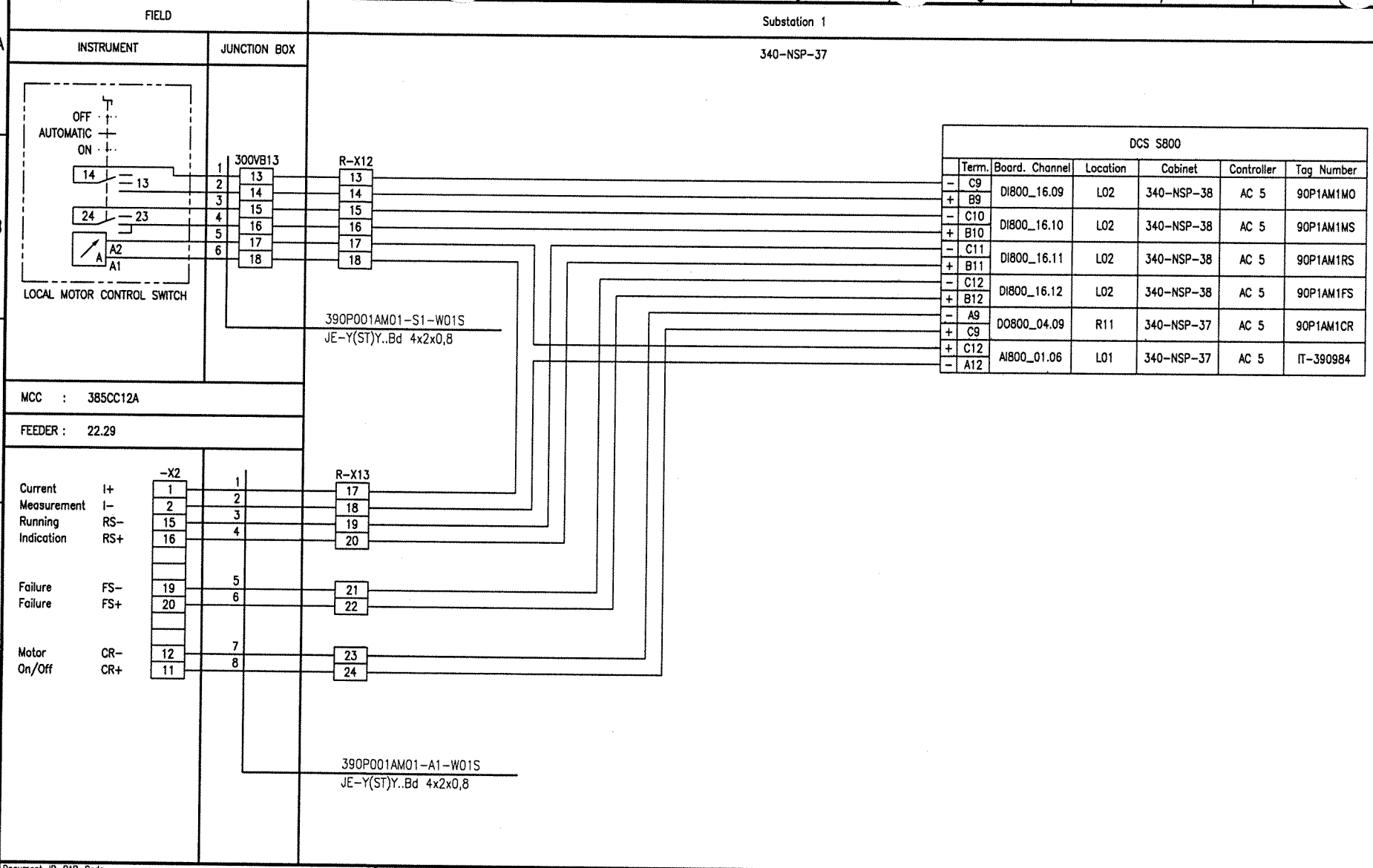

Document-ID-BAR-Code

Rev.	Date	Drawn/Prepared	Checked	Approved	Description	Acc. Code
01	20.09.06	Hie / Hie	20.09.06 Heuer	20.09.06 Heuer	AS BUILT	

UAN	Document ID	Part	Rev.	Group
01-3040	UD-EL-G00-FS-0001		01	

Code

Uhde

All rights reserved © Uhde GmbH

Pro. Unit	TON	Cat. Code	Acc. Code	Status
Con. Unit	Type of Document: DH	Order No.	Scale	Tot. Sheets

	Date	Name
Drawn	08.04.2005	Hielscher
Prepared	08.04.2005	Hohmann
Checked	08.04.2005	Heuer
Approved	08.04.2005	Heuer

AMMONIA / UREA PROJECT SUEZ II

Designation
Wiring diagram
390P001AM01

Store Location: Server \\p013040\013040-ADA
Store Location: Folder \EI-ET\DH_el-wiring-diag\
Store Name 01-3040_390P001AM01_000_01.dwg

ISO A3

BORDER-A3_013040.dwg / A03A3_013040.dwg / 17.05.2004

FIELD | Substation 1

INSTRUMENT | JUNCTION BOX | 340-NSP-37

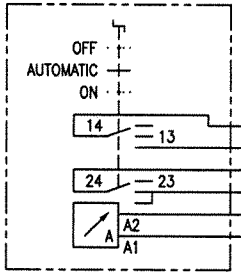

LOCAL MOTOR CONTROL SWITCH

300VB13: 1–19, 2–20, 3–21, 4–22, 5–23, 6–24

R-X12: 19, 20, 21, 22, 23, 24

390P001BM01-S1-W01S
JE-Y(ST)Y..Bd 4x2x0,8

MCC : 385CC12B

FEEDER : 27.29

		-X2		R-X13
Current Measurement	I+	1	1	25
	I-	2	2	26
Running Indication	RS-	15	3	27
	RS+	16	4	28
Failure	FS-	19	5	29
Failure	FS+	20	6	30
Motor On/Off	CR-	12	7	31
	CR+	11	8	32

390P001BM01-A1-W01S
JE-Y(ST)Y..Bd 4x2x0,8

DCS S800

	Term.	Board. Channel	Location	Cabinet	Controller	Tag Number
-	C9	DI800_17.09	L03	340-NSP-38	AC 5	90P1BM1MO
+	B9					
-	C10	DI800_17.10	L03	340-NSP-38	AC 5	90P1BM1MS
+	B10					
-	C11	DI800_17.11	L03	340-NSP-38	AC 5	90P1BM1RS
+	B11					
-	C12	DI800_17.12	L03	340-NSP-38	AC 5	90P1BM1FS
+	B12					
-	A9	DO800_05.09	R12	340-NSP-37	AC 5	90P1BM1CR
+	C9					
+	C12	AI800_02.06	L02	340-NSP-37	AC 5	IT-390985
-	A12					

Document-ID-BAR-Code

Rev.	Date	Name (Drawn/Prepared)	Date	Name (Checked)	Date	Name (Approved)	Description	Acc. Code
01	20.09.06	Hie Hie	20.09.06	Heuer	20.09.06	Heuer	AS BUILT	

UAN	Document ID	Part	Rev.	Group
01-3040	UD-EL-G00-FS-0001		01	

Code

Uhde

All rights reserved © Uhde GmbH

Pro. Unit	TON	Cat. Code	Acc. Code	Status
Con. Unit	Type of Document: DH	Order No.	Scale	Tot. Sheets

	Date	Name
Drawn	08.04.2005	Hielscher
Prepared	08.04.2005	Hohmann
Checked	08.04.2005	Heuer
Approved	08.04.2005	Heuer

AMMONIA / UREA PROJECT SUEZ II

Designation
Wiring diagram
390P001BM01

Store Location: Server \\p013040\013040-ADA
Store Location: Folder \EI-ET\DH_el-wiring-diag\
Store Name 01-3040_390P001BM01_000_01.dwg

ISO A3

BORDER-A3_013040.dwg / A003A3_013040.dwg / 17.05.2004

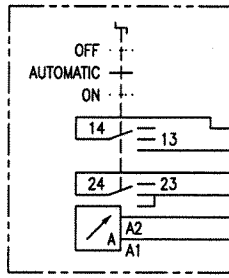

FIELD | Substation 1

INSTRUMENT | JUNCTION BOX | 340-NSP-37

DCS S800						
	Term.	Board. Channel	Location	Cabinet	Controller	Tag Number
-	C1	DI800_19.01	L05	340-NSP-38	AC 5	90P2AM1MO
+	B1					
-	C2	DI800_19.02	L05	340-NSP-38	AC 5	90P2AM1MS
+	B2					
+	C8	AI800_04.04	R02	340-NSP-37	AC 5	IT-390981
-	A8					
-	C3	DI800_19.03	L05	340-NSP-38	AC 5	90P2AM1RS
+	B3					
-	C4	DI800_19.04	L05	340-NSP-38	AC 5	90P2AM1FS
+	B4					
-	A10	DO800_04.10	R11	340-NSP-37	AC 5	90P2AM1CR
+	C10					

Document-ID-BAR-Code

Rev.	Date	Name	Date	Name	Date	Name	Description	Acc. Code
01	20.09.06	Hie	20.09.06	Heuer	20.09.06	Heuer	AS BUILT	
	Drawn/Prepared		Checked		Approved			

Code				
UAN	Document ID	Part	Rev.	Group
01-3040	UD-EL-G00-FS-0001		01	

Uhde

All rights reserved © Uhde GmbH

Pro. Unit	TON	Cat. Code	Acc. Code	Status
Con. Unit	Type of Document: DH	Order No.	Scale	Tot. Sheets

	Date	Name
Drawn	08.04.2005	Hielscher
Prepared	08.04.2005	Hohmann
Checked	08.04.2005	Heuer
Approved	08.04.2005	Heuer

AMMONIA / UREA PROJECT SUEZ II

Designation
Wiring diagram
390P002AM01

Store Location: Server \\p013040\013040-ADA
Store Location: Folder \EI-ET\DH_el-wiring-diag\
Store Name 01-3040_390P002AM01_000_01.dwg

ISO A3

BORDER-A3_013040.dwg / A003A3_013040.dwg / 17.05.2004

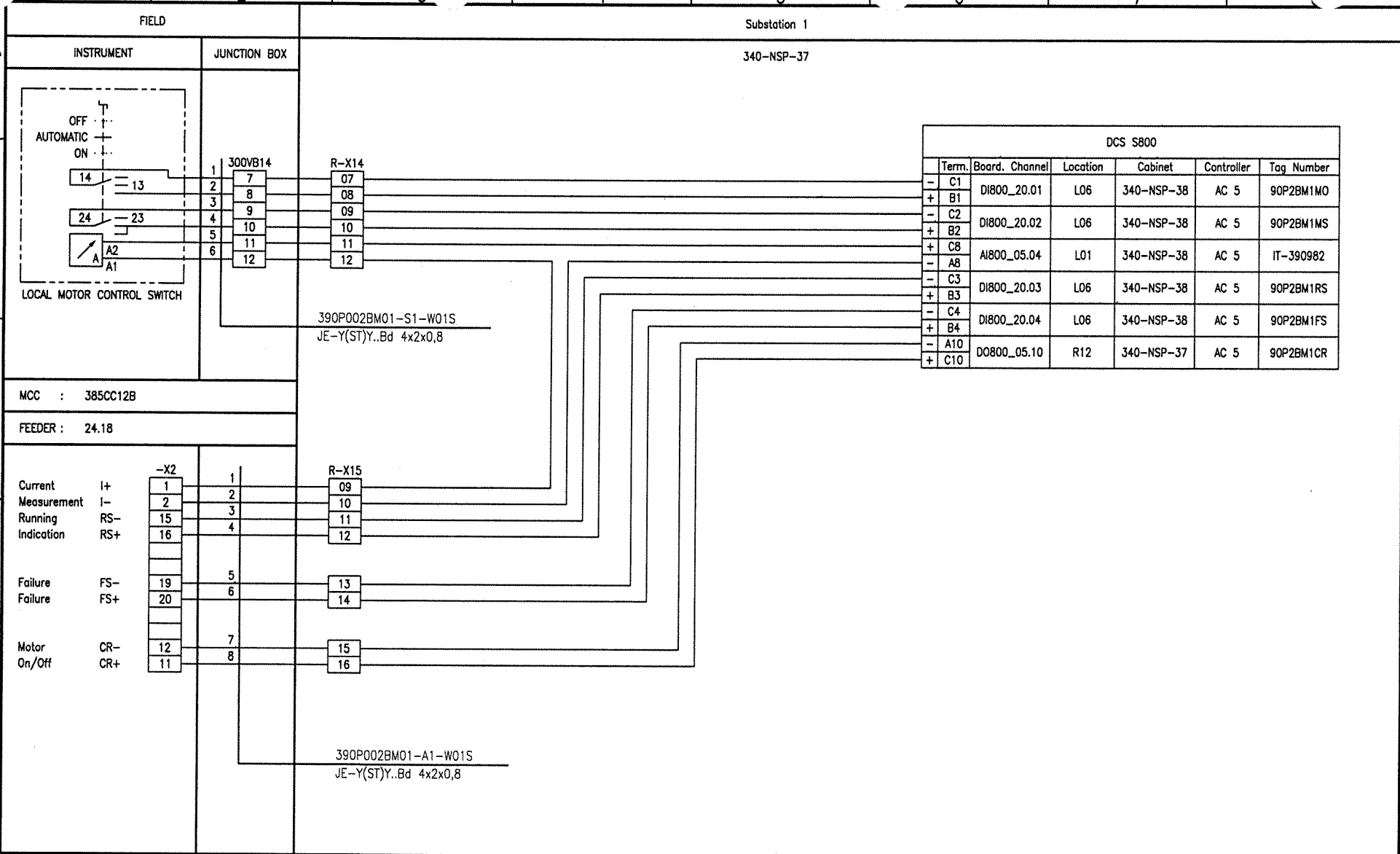

Document-ID-BAR-Code

Rev.	Date	Name (Drawn/Prepared)	Date	Name (Checked)	Date	Name (Approved)	Description	Acc. Code
01	20.09.06	Hie Hie	20.09.06	Heuer	20.09.06	Heuer	AS BUILT	

UAN	Document ID	Part	Rev.	Group
01-3040	UD-EL-G00-FS-0001		01	

Code

Pro. Unit	TON	Cat. Code	Acc. Code	Status

Con. Unit	Type of Document	Order No.	Scale	Tot. Sheets
	DH			

	Date	Name
Drawn	08.04.2005	Hielscher
Prepared	08.04.2005	Hohmann
Checked	08.04.2005	Heuer
Approved	08.04.2005	Heuer

AMMONIA / UREA PROJECT SUEZ II

Uhde

All rights reserved © Uhde GmbH

Designation
Wiring diagram
390P002BM01

Store Location: Server \\p013040\013040-ADA
Store Location: Folder \EI-ET\DH_el-wiring-diag\
Store Name 01-3040_390P002BM01_000_01.dwg

ISO A3

BORDER-A3_013040.dwg / A003A3_013040.dwg / 17.05.2004

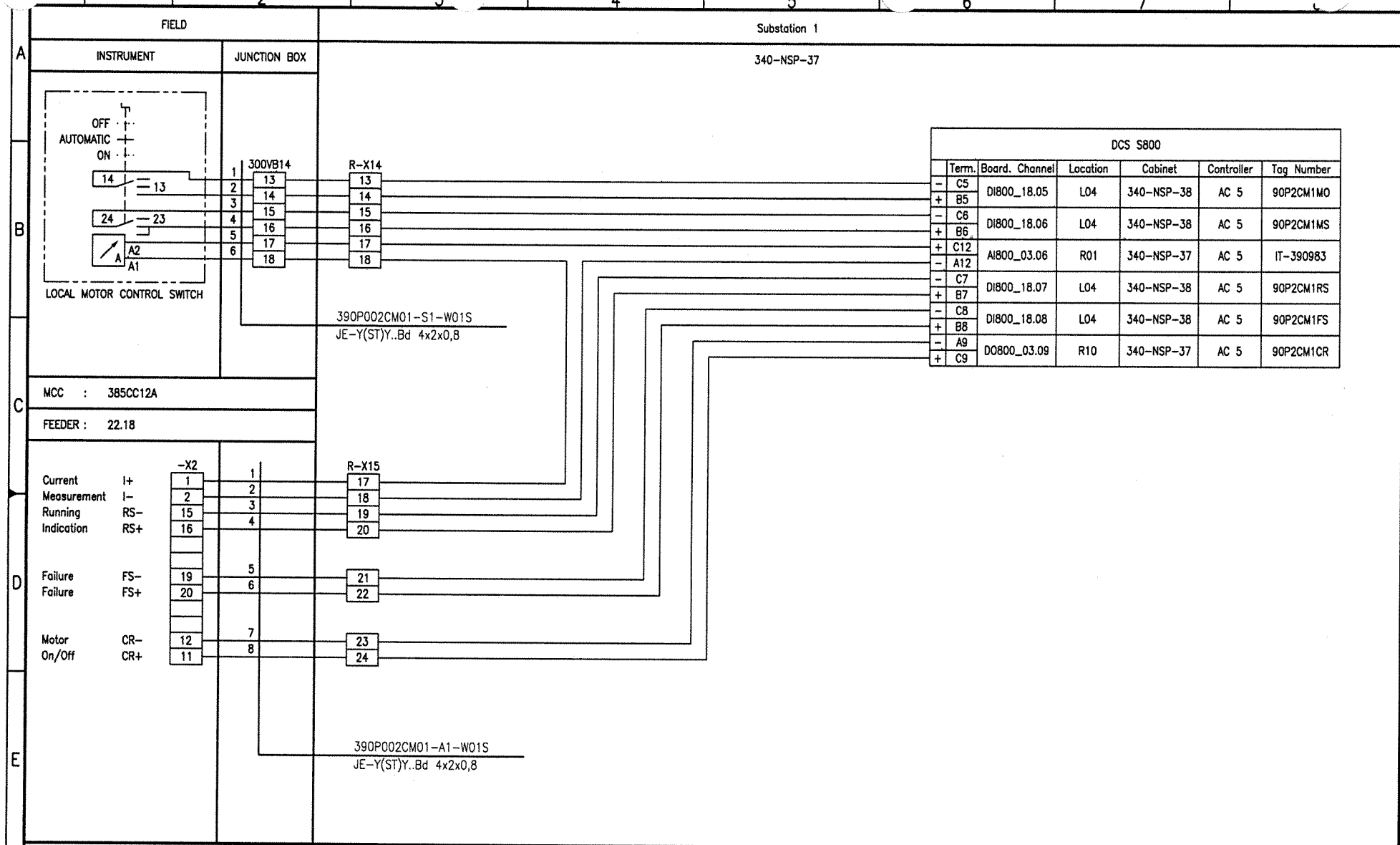

Document-ID-BAR-Code

Rev.	Date	Name	Date	Name	Date	Name	Description	Acc. Code
01	20.09.06	Hie	20.09.06	Heuer	20.09.06	Heuer	AS BUILT	
	Drawn/Prepared		Checked		Approved			

UAN	Code: Document ID	Part	Rev.	Group
01-3040	UD-EL-G00-FS-0001		01	

Uhde

All rights reserved © Uhde GmbH

Pro. Unit	TON	Cat. Code	Acc. Code	Status
Con. Unit	Type of Document: DH	Order No.	Scale	Tot. Sheets

	Date	Name
Drawn	08.04.2005	Hielscher
Prepared	08.04.2005	Hohmann
Checked	08.04.2005	Heuer
Approved	08.04.2005	Heuer

AMMONIA / UREA PROJECT SUEZ II

Designation: Wiring diagram 390P002CM01

Store Location: Server \\p013040\013040-ADA

Store Location: Folder \EI-ET\DH_el-wiring-diag\

Store Name: 01-3040_390P002CM01_000_01.dwg

ISO A3

BORDER-A3_013040.dwg / AG03A3_013040.dwg / 17.05.2004

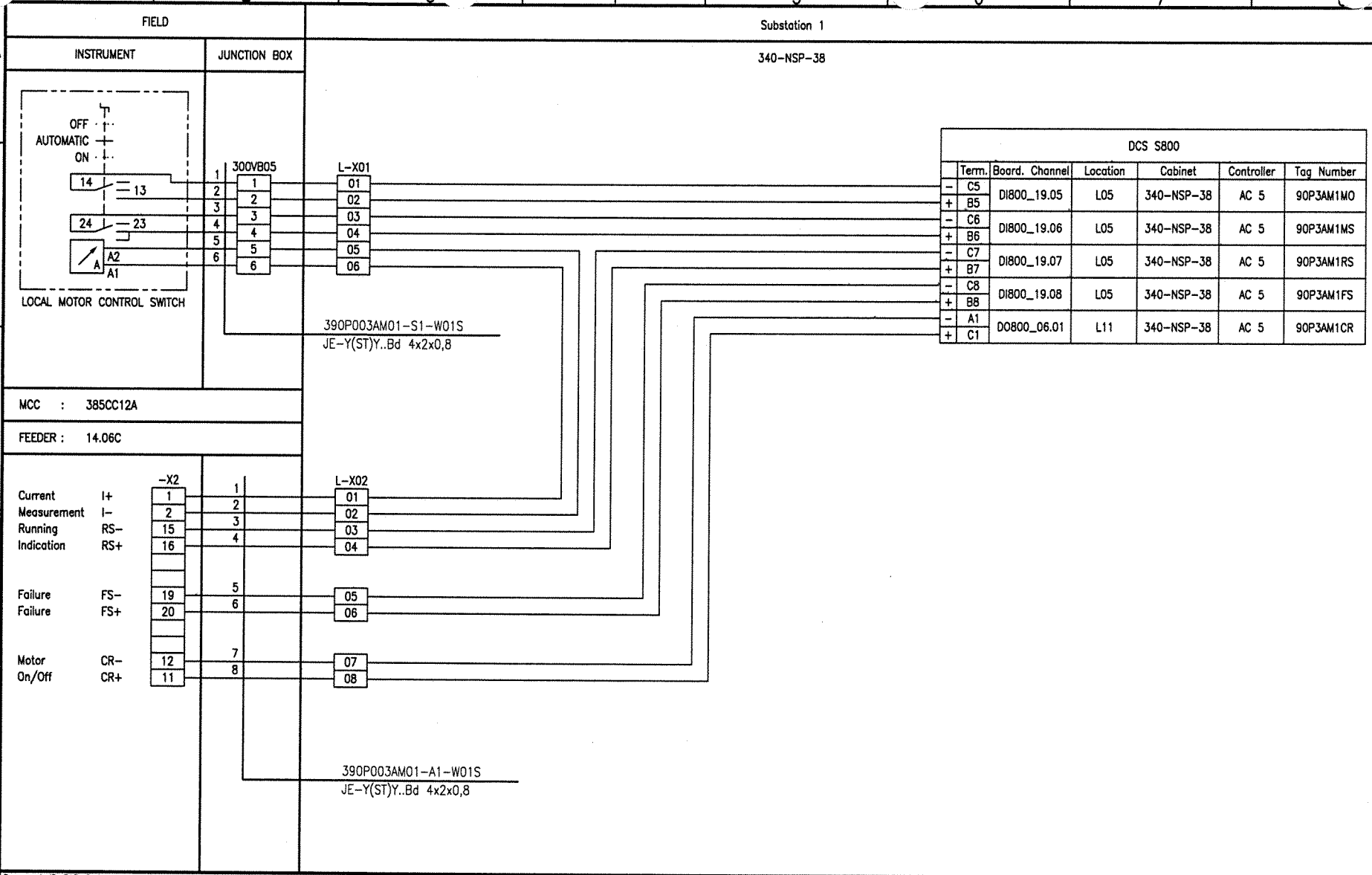

Document-ID-BAR-Code

Rev.	Date	Name	Date	Name	Date	Name	Description	Acc. Code
01	20.09.06	Hie	20.09.06	Heuer	20.09.06	Heuer	AS BUILT	
	Drawn/Prepared		Checked		Approved			

UAN	Code: Document ID	Part	Rev.	Group
01-3040	UD-EL-G00-FS-0001		01	

Uhde

All rights reserved © Uhde GmbH

Pro. Unit	TON	Cat. Code	Acc. Code	Status

Con. Unit	Type of Document	Order No.	Scale	Tot. Sheets
	DH			

	Date	Name
Drawn	08.04.2005	Hielscher
Prepared	08.04.2005	Hohmann
Checked	08.04.2005	Heuer
Approved	08.04.2005	Heuer

AMMONIA / UREA PROJECT SUEZ II

Designation
Wiring diagram
390P003AM01

Store Location: Server
\\p013040\013040-ADA

Store Location: Folder
\EI-ET\DH_el-wiring-diag\

Store Name
01-3040_390P003AM01_000_01.dwg

ISO A3

BORDER-A3_013040.dwg / AG03A3_013040.dwg / 17.05.2004

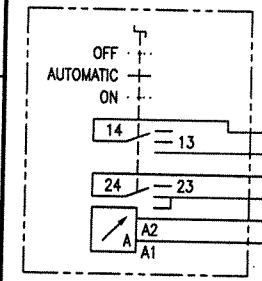

LOCAL MOTOR CONTROL SWITCH

FIELD

INSTRUMENT | JUNCTION BOX

Substation 1

340-NSP-38

300VB05

L-X01

390P003BM01-S1-W01S
JE-Y(ST)Y..Bd 4x2x0,8

MCC : 385CC12A

FEEDER : 18.06A

-X2

L-X02

		-X2	300VB05	L-X02
Current Measurement	I+	1	1	09
	I-	2	2	10
Running Indication	RS-	15	3	11
	RS+	16	4	12
Failure	FS-	19	5	13
Failure	FS+	20	6	14
Motor On/Off	CR-	12	7	15
	CR+	11	8	16

390P003BM01-A1-W01S
JE-Y(ST)Y..Bd 4x2x0,8

DCS S800

	Term.	Board. Channel	Location	Cabinet	Controller	Tag Number
-	C5	DI800_20.05	L06	340-NSP-38	AC 5	90P3BM1MO
+	B5					
-	C6	DI800_20.06	L06	340-NSP-38	AC 5	90P3BM1MS
+	B6					
-	C7	DI800_20.07	L06	340-NSP-38	AC 5	90P3BM1RS
+	B7					
-	C8	DI800_20.08	L06	340-NSP-38	AC 5	90P3BM1FS
+	B8					
-	A1	DO800_07.01	L12	340-NSP-38	AC 5	90P3BM1CR
+	C1					

Document-ID-BAR-Code

Rev.	Date	Name	Drawn/Prepared	Date	Name	Checked	Date	Name	Approved	Description	Acc. Code
01	20.09.06	Hie	Hie	20.09.06	Heuer		20.09.06	Heuer		AS BUILT	

UAN	Code: Document ID	Part	Rev.	Group
01-3040	UD-EL-G00-FS-0001		01	

Uhde

All rights reserved © Uhde GmbH

Pro. Unit	TON	Cat. Code	Acc. Code	Status
Con. Unit	Type of Document: DH	Order No.	Scale	Tot. Sheets

	Date	Name
Drawn	08.04.2005	Hielscher
Prepared	08.04.2005	Hohmann
Checked	08.04.2005	Heuer
Approved	08.04.2005	Heuer

AMMONIA / UREA PROJECT SUEZ II

Designation: Wiring diagram 390P003BM01

Store Location: Server \\p013040\013040-ADA

Store Location: Folder \EI-ET\DH_el-wiring-diag\

Store Name: 01-3040_390P003BM01_000_01.dwg

BORDER-A3_013040.dwg / AD3A3_013040.dwg / 17.05.2004

ISO A3

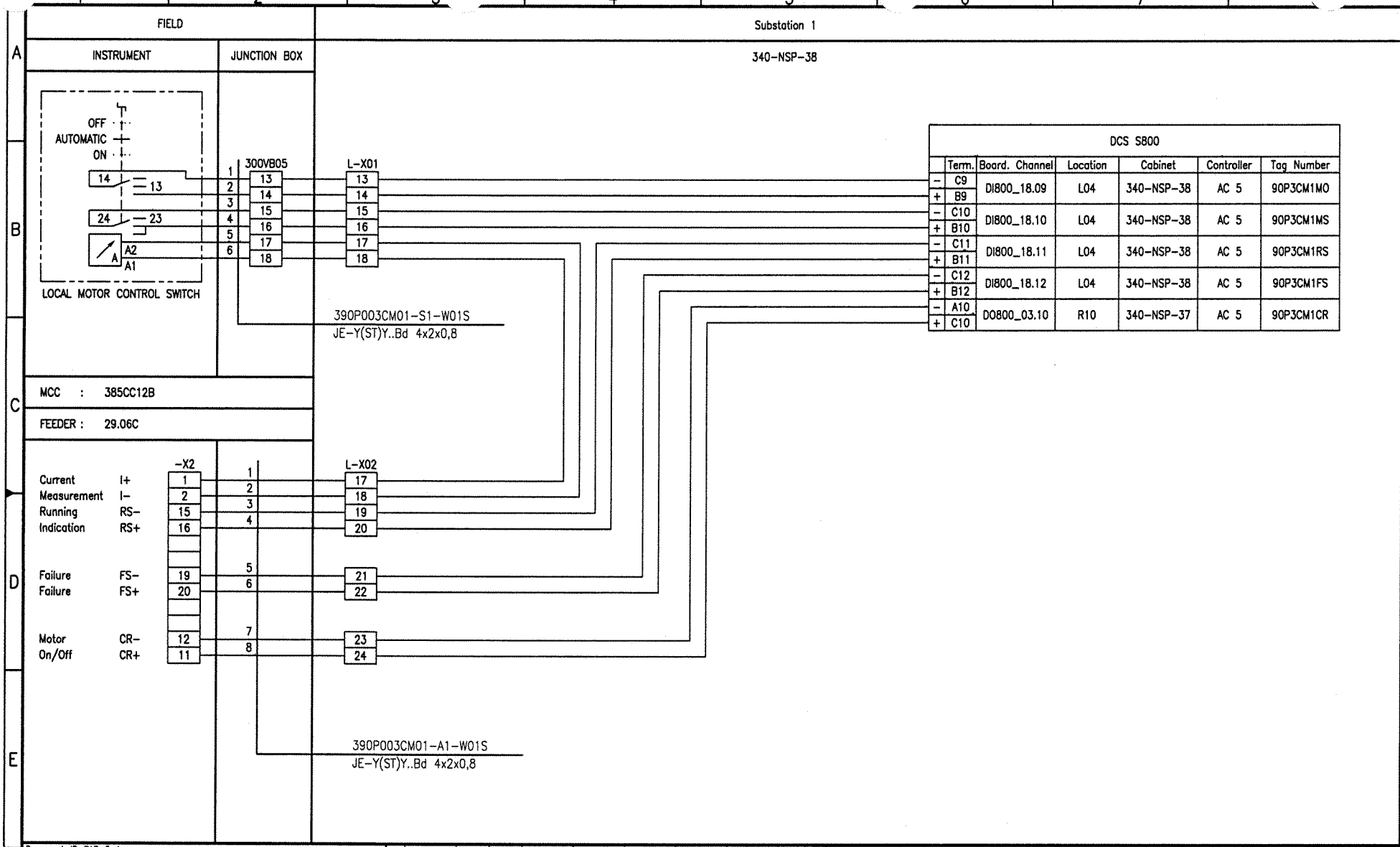

Document-ID-BAR-Code

Rev.	Date	Name	Date	Name	Date	Name	Description	Acc. Code
01	20.09.06	Hie (Drawn/Prepared)	20.09.06	Heuer (Checked)	20.09.06	Heuer (Approved)	AS BUILT	

UAN	Document ID	Part	Rev.	Group
01-3040	UD-EL-G00-FS-0001		01	

Code

Uhde

All rights reserved © Uhde GmbH

Pro. Unit	TON	Cat. Code	Acc. Code	Status

Con. Unit	Type of Document	Order No.	Scale	Tot. Sheets
	DH			

	Date	Name
Drawn	08.04.2005	Hielscher
Prepared	08.04.2005	Hohmann
Checked	08.04.2005	Heuer
Approved	08.04.2005	Heuer

AMMONIA / UREA PROJECT SUEZ II

Designation
Wiring diagram
390P003CM01

Store Location: Server
\\p013040\013040-ADA

Store Location: Folder
\EI-ET\DH_el-wiring-diag\

Store Name
01-3040_390P003CM01_000_01.dwg

ISO A3

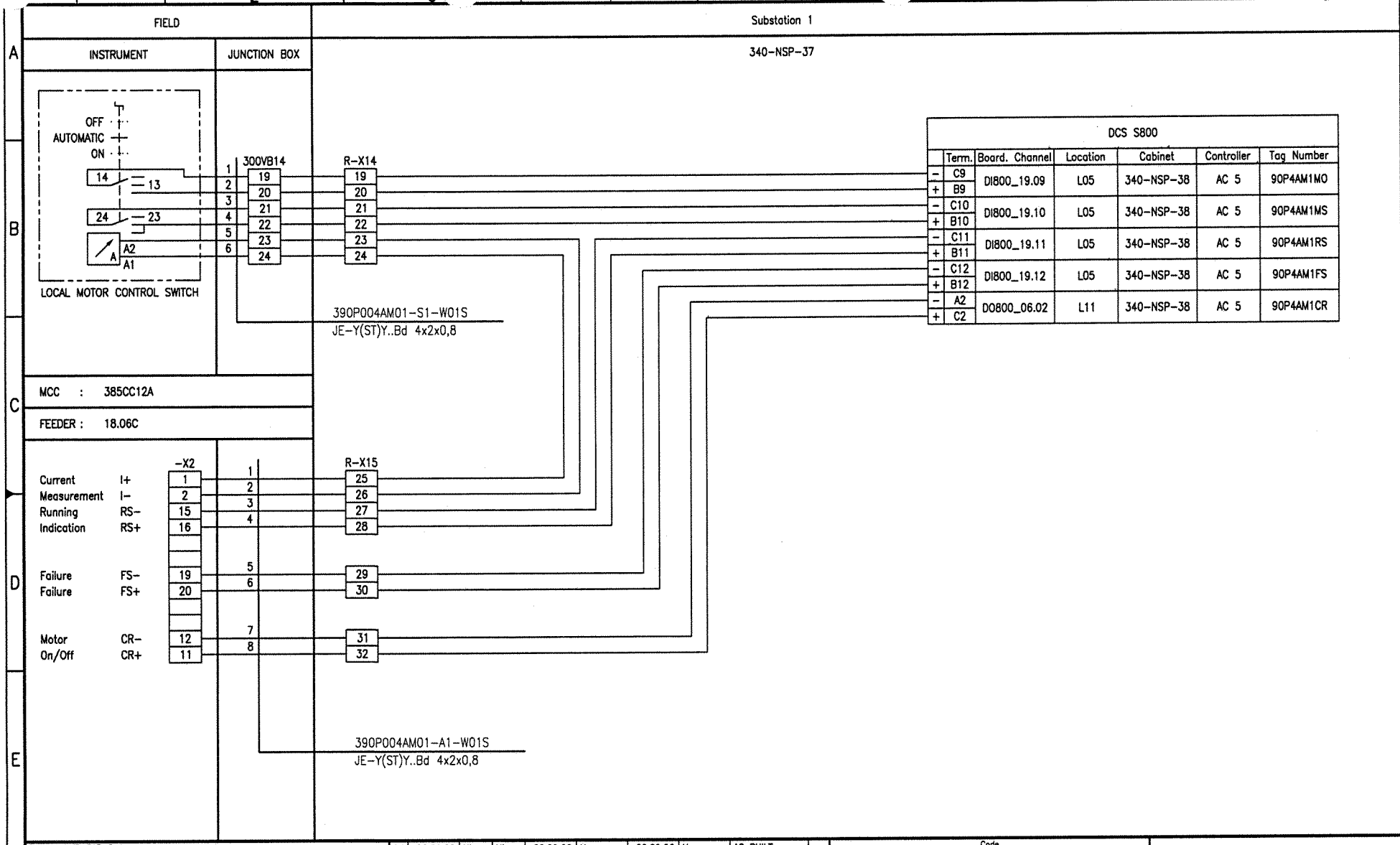

Document-ID-BAR-Code

Rev.	Date	Name (Drawn/Prepared)	Date	Name (Checked)	Date	Name (Approved)	Description	Acc. Code
01	20.09.06	Hie Hie	20.09.06	Heuer	20.09.06	Heuer	AS BUILT	

Pro. Unit	TON	Cat. Code	Acc. Code	Status

Con. Unit	Type of Document	Order No.	Scale	Tot. Sheets
	DH			

	Date	Name
Drawn	08.04.2005	Hielscher
Prepared	08.04.2005	Hohmann
Checked	08.04.2005	Heuer
Approved	08.04.2005	Heuer

Code: UAN 01-3040 | Document ID UD-EL-G00-FS-0001 | Part | Rev. 01 | Group

Uhde

All rights reserved © Uhde GmbH

AMMONIA / UREA PROJECT SUEZ II

Designation: Wiring diagram 390P004AM01

Store Location: Server \\p013040\013040-ADA
Store Location: Folder \Ei-ET\DH_el-wiring-diag\
Store Name 01-3040_390P004AM01_000_01.dwg

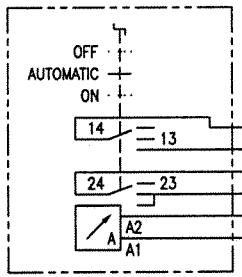

FIELD | Substation 1

INSTRUMENT | JUNCTION BOX | 340-NSP-38

LOCAL MOTOR CONTROL SWITCH

300VB05: 1–6 → 19, 20, 21, 22, 23, 24

L-X01: 19, 20, 21, 22, 23, 24

390P004BM01-S1-W01S
JE-Y(ST)Y..Bd 4x2x0,8

MCC : 385CC12B

FEEDER : 27.06A

		-X2	300VB05	L-X02
Current Measurement	I+	1	1	25
	I-	2	2	26
Running Indication	RS-	15	3	27
	RS+	16	4	28
Failure	FS-	19	5	29
Failure	FS+	20	6	30
Motor On/Off	CR-	12	7	31
	CR+	11	8	32

390P004BM01-A1-W01S
JE-Y(ST)Y..Bd 4x2x0,8

DCS S800

	Term.	Board. Channel	Location	Cabinet	Controller	Tag Number
-	C9	DI800_20.09	L06	340-NSP-38	AC 5	90P4BM1MO
+	B9					
-	C10	DI800_20.10	L06	340-NSP-38	AC 5	90P4BM1MS
+	B10					
-	C11	DI800_20.11	L06	340-NSP-38	AC 5	90P4BM1RS
+	B11					
-	C12	DI800_20.12	L06	340-NSP-38	AC 5	90P4BM1FS
+	B12					
-	A2	DO800_07.02	L12	340-NSP-38	AC 5	90P4BM1CR
+	C2					

Document-ID-BAR-Code

Rev.	Date	Name (Drawn/Prepared)	Date	Name (Checked)	Date	Name (Approved)	Description	Acc. Code
01	20.09.06	Hie Hie	20.09.06	Heuer	20.09.06	Heuer	AS BUILT	

Pro. Unit: TON | Cat. Code | Acc. Code | Status

Con. Unit | Type of Document: DH | Order No. | Scale | Tot. Sheets

	Date	Name
Drawn	08.04.2005	Hielscher
Prepared	08.04.2005	Hohmann
Checked	08.04.2005	Heuer
Approved	08.04.2005	Heuer

Code: UAN 01-3040 | Document ID UD-EL-G00-FS-0001 | Part | Rev. 01 | Group

Uhde

All rights reserved © Uhde GmbH

AMMONIA / UREA PROJECT SUEZ II

Designation: Wiring diagram 390P004BM01

Store Location: Server \\p013040\013040-ADA | Store Location: Folder \Ei-ET\DH_el-wiring-diag\ | Store Name 01-3040_390P004BM01_000_01.dwg

ISO A3

BORDER-A3_013040.dwg / A603A3_013040.dwg / 17.05.2004

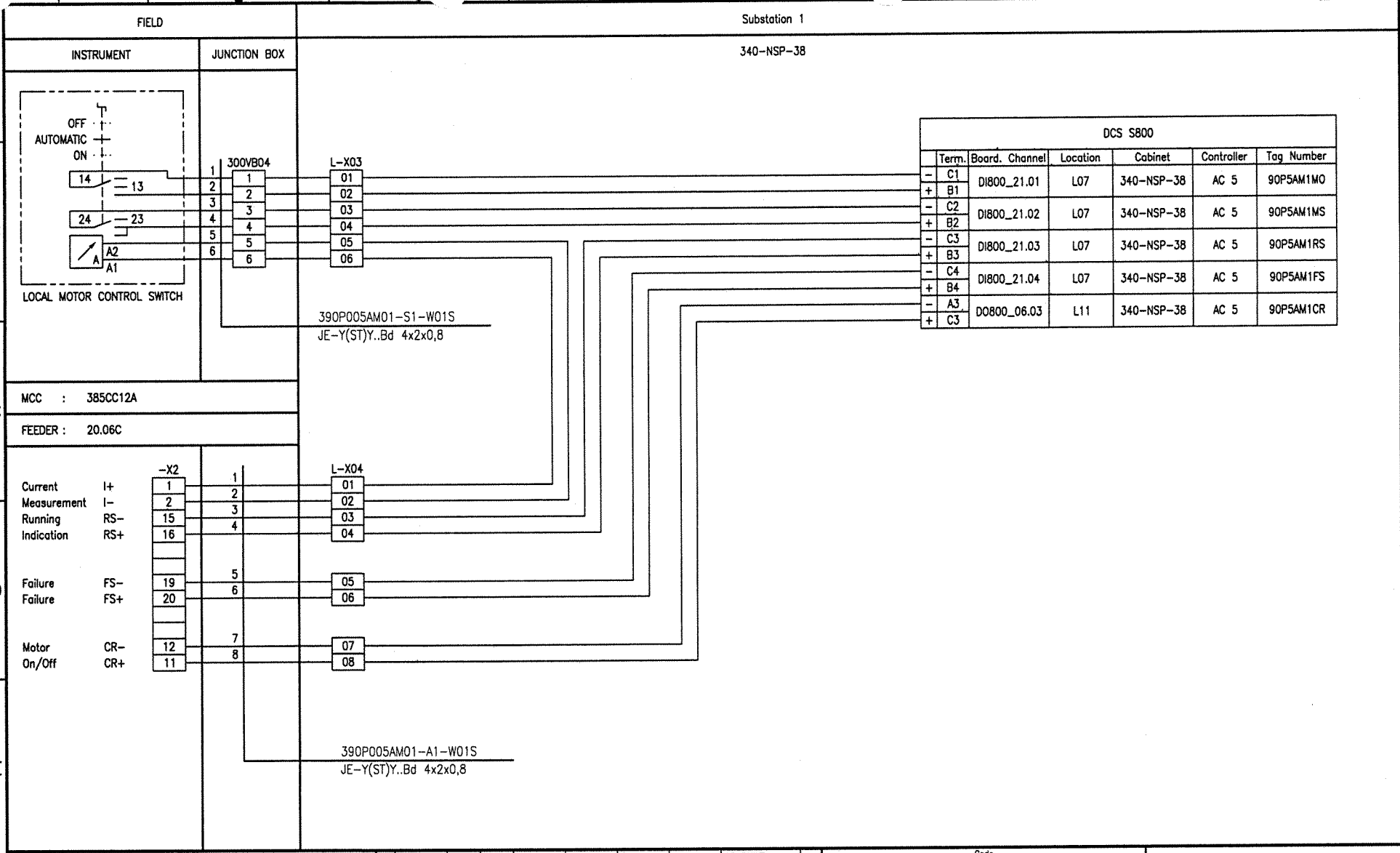

Document-ID-BAR-Code

Rev.	Date	Name (Drawn/Prepared)	Date	Name (Checked)	Date	Name (Approved)	Description	Acc. Code
01	20.09.06	Hie Hie	20.09.06	Heuer	20.09.06	Heuer	AS BUILT	

UAN	Document ID	Part	Rev.	Group
01-3040	UD-EL-G00-FS-0001		01	

Code

Uhde

All rights reserved © Uhde GmbH

Pro. Unit	TON	Cat. Code	Acc. Code	Status

Con. Unit	Type of Document	Order No.	Scale	Tot. Sheets
	DH			

	Date	Name
Drawn	08.04.2005	Hielscher
Prepared	08.04.2005	Hohmann
Checked	08.04.2005	Heuer
Approved	08.04.2005	Heuer

AMMONIA / UREA PROJECT SUEZ II

Designation
Wiring diagram
390P005AM01

Store Location: Server
\\p013040\013040-ADA

Store Location: Folder
\Ei-ET\DH_el-wiring-diag\

Store Name
01-3040_390P005AM01_000_01.dwg

ISO A3

BORDER-A3_013040.dwg / AG0343_013040.dwg / 17.05.2004

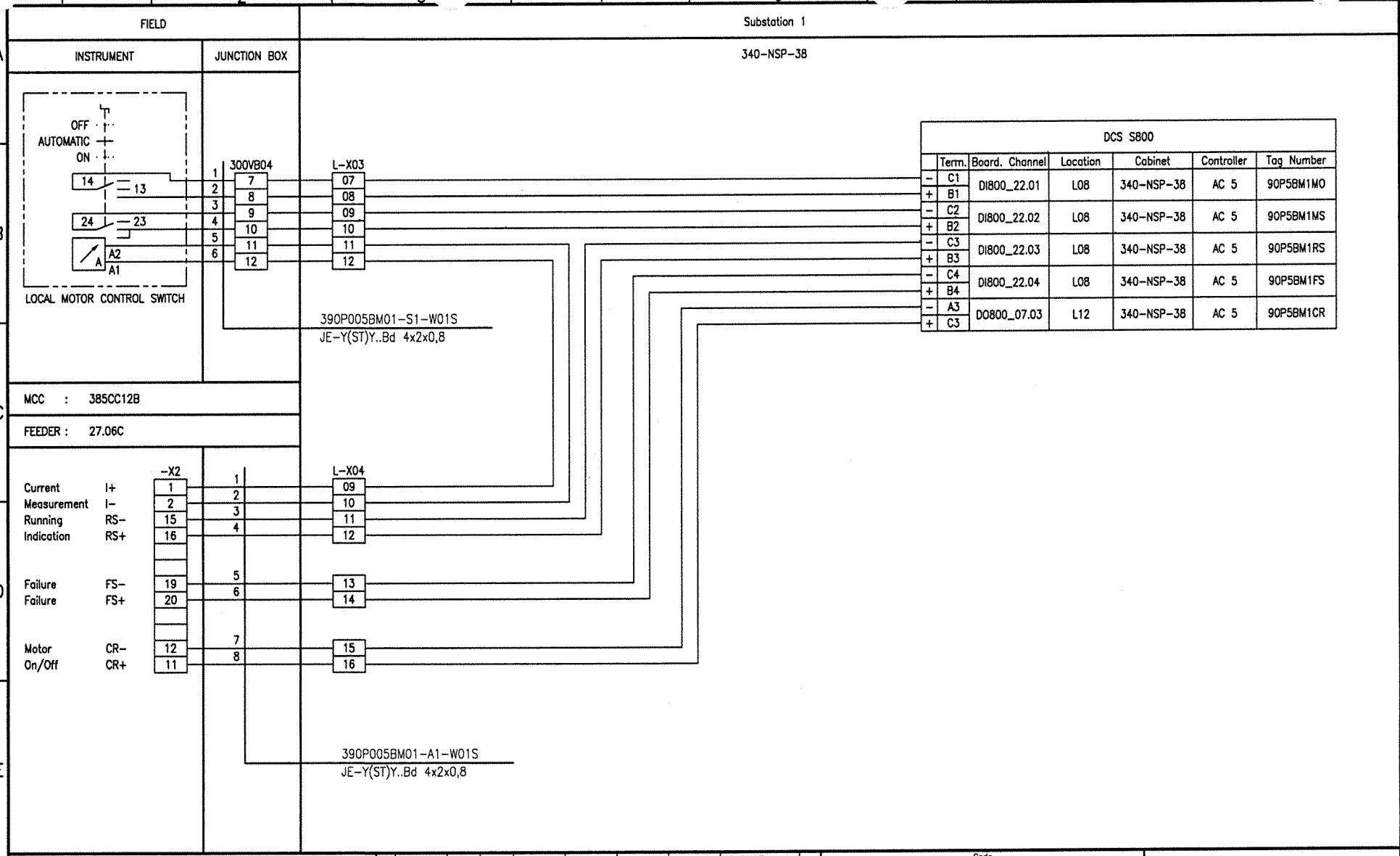

Document-ID-BAR-Code

Rev.	Date	Name	Date	Name	Date	Name	Description	Acc. Code
01	20.09.06	Hie	20.09.06	Heuer	20.09.06	Heuer	AS BUILT	
	Drawn/Prepared		Checked		Approved			

UAN	Document ID	Part	Rev.	Group
01-3040	UD-EL-G00-FS-0001		01	

Code

Uhde

All rights reserved © Uhde GmbH

Pro. Unit	TON	Cat. Code	Acc. Code	Status

Con. Unit	Type of Document	Order No.	Scale	Tot. Sheets
	DH			

	Date	Name
Drawn	08.04.2005	Hielscher
Prepared	08.04.2005	Hohmann
Checked	08.04.2005	Heuer
Approved	08.04.2005	Heuer

AMMONIA / UREA
PROJECT
SUEZ II

Designation
Wiring diagram
390P005BM01

Store Location: Server
\\p013040\013040-ADA

Store Location: Folder
\Ei-ET\DH_el-wiring-diag\

Store Name
01-3040_390P005BM01_000_01.dwg

ISO A3

BORDER-A3_013040.dwg / A0G3A3_013040.dwg / 17.05.2004

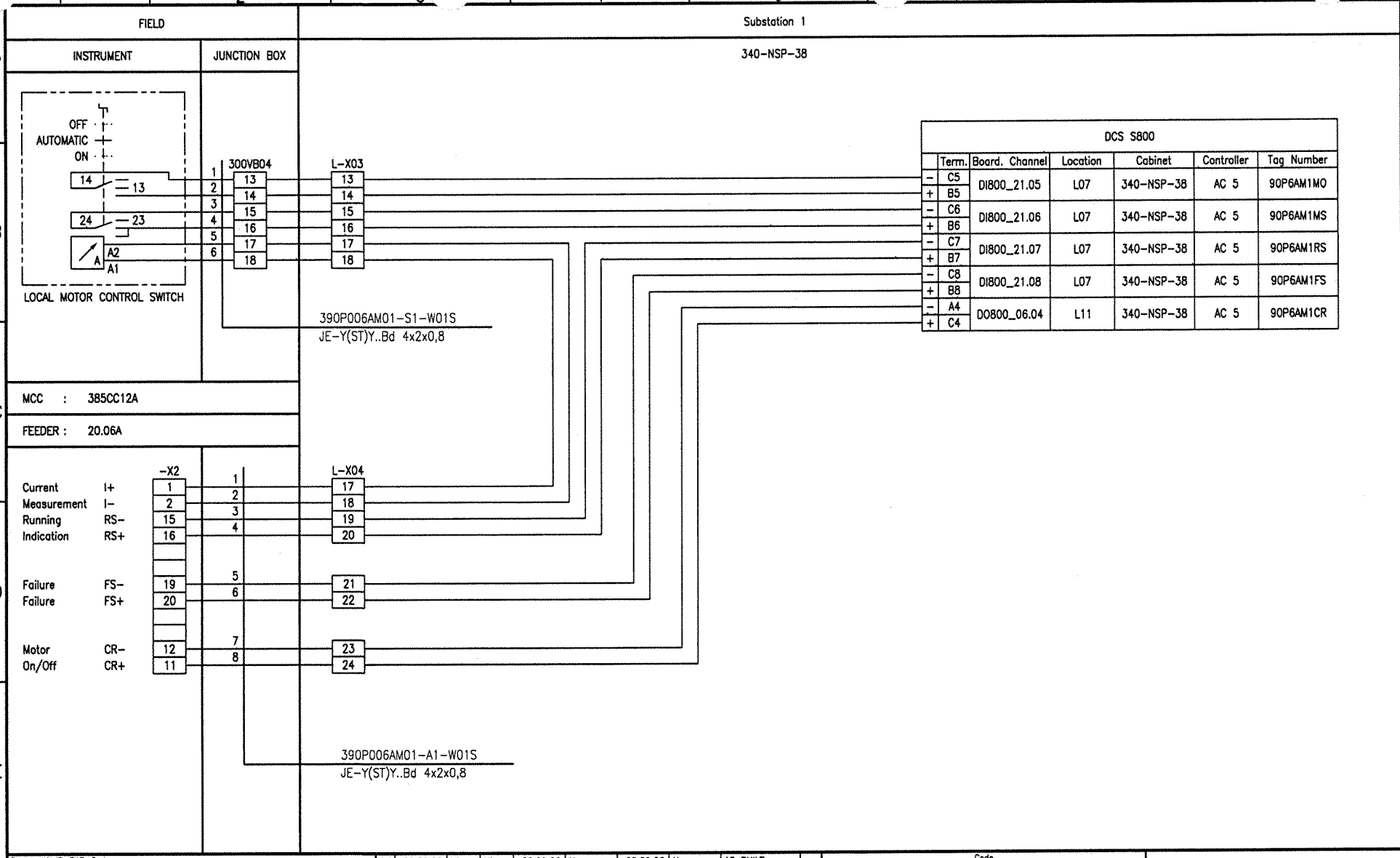

Document-ID-BAR-Code

Rev.	Date	Name	Date	Name	Date	Name	Description	Acc. Code
01	20.09.06	Hie Hie	20.09.06	Heuer	20.09.06	Heuer	AS BUILT	
	Drawn/Prepared		Checked		Approved			

UAN	Document ID	Part	Rev.	Group
01-3040	UD-EL-G00-FS-0001		01	

Code

Uhde

All rights reserved © Uhde GmbH

Pro. Unit	TON	Cat. Code	Acc. Code	Status
Con. Unit	Type of Document: DH	Order No.	Scale	Tot. Sheets

	Date	Name
Drawn	08.04.2005	Hielscher
Prepared	08.04.2005	Hohmann
Checked	08.04.2005	Heuer
Approved	08.04.2005	Heuer

AMMONIA / UREA PROJECT SUEZ II

Designation
Wiring diagram
390P006AM01

Store Location: Server \\p013040\013040-ADA
Store Location: Folder \EI-ET\DH_el-wiring-diag\
Store Name 01-3040_390P006AM01_000_01.dwg

ISO A3

BORDER-A3_013040.dwg / A0343_013040.dwg / 17.05.2004

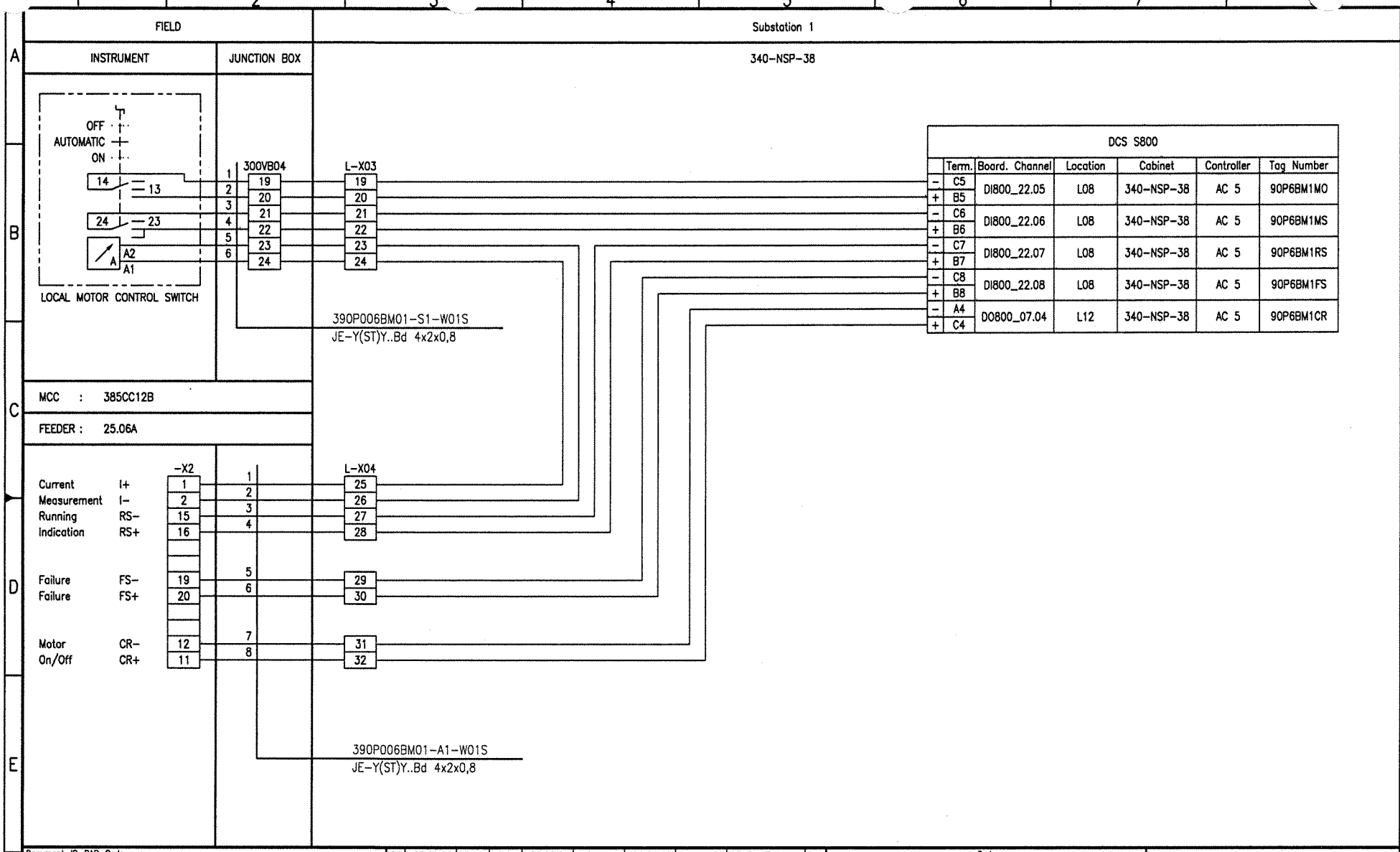

Document-ID-BAR-Code

Rev.	Date	Drawn/Prepared	Date	Checked	Date	Approved	Description	Acc. Code
01	20.09.06	Hie Hie	20.09.06	Heuer	20.09.06	Heuer	AS BUILT	

UAN	Document ID	Part	Rev.	Group
01-3040	UD-EL-G00-FS-0001		01	

Code

Uhde

All rights reserved © Uhde GmbH

Pro. Unit	TON	Cat. Code	Acc. Code	Status
Con. Unit	Type of Document: DH	Order No.	Scale	Tot. Sheets

	Date	Name
Drawn	08.04.2005	Hielscher
Prepared	08.04.2005	Hohmann
Checked	08.04.2005	Heuer
Approved	08.04.2005	Heuer

AMMONIA / UREA PROJECT SUEZ II

Designation
Wiring diagram
390P006BM01

Store Location: Server \\p013040\013040-ADA
Store Location: Folder \EI-ET\DH_el-wiring-diag\
Store Name 01-3040_390P006BM01_000_01.dwg

ISO A3

BORDER-A3_013040.dwg / A003A3_013040.dwg / 17.05.2004

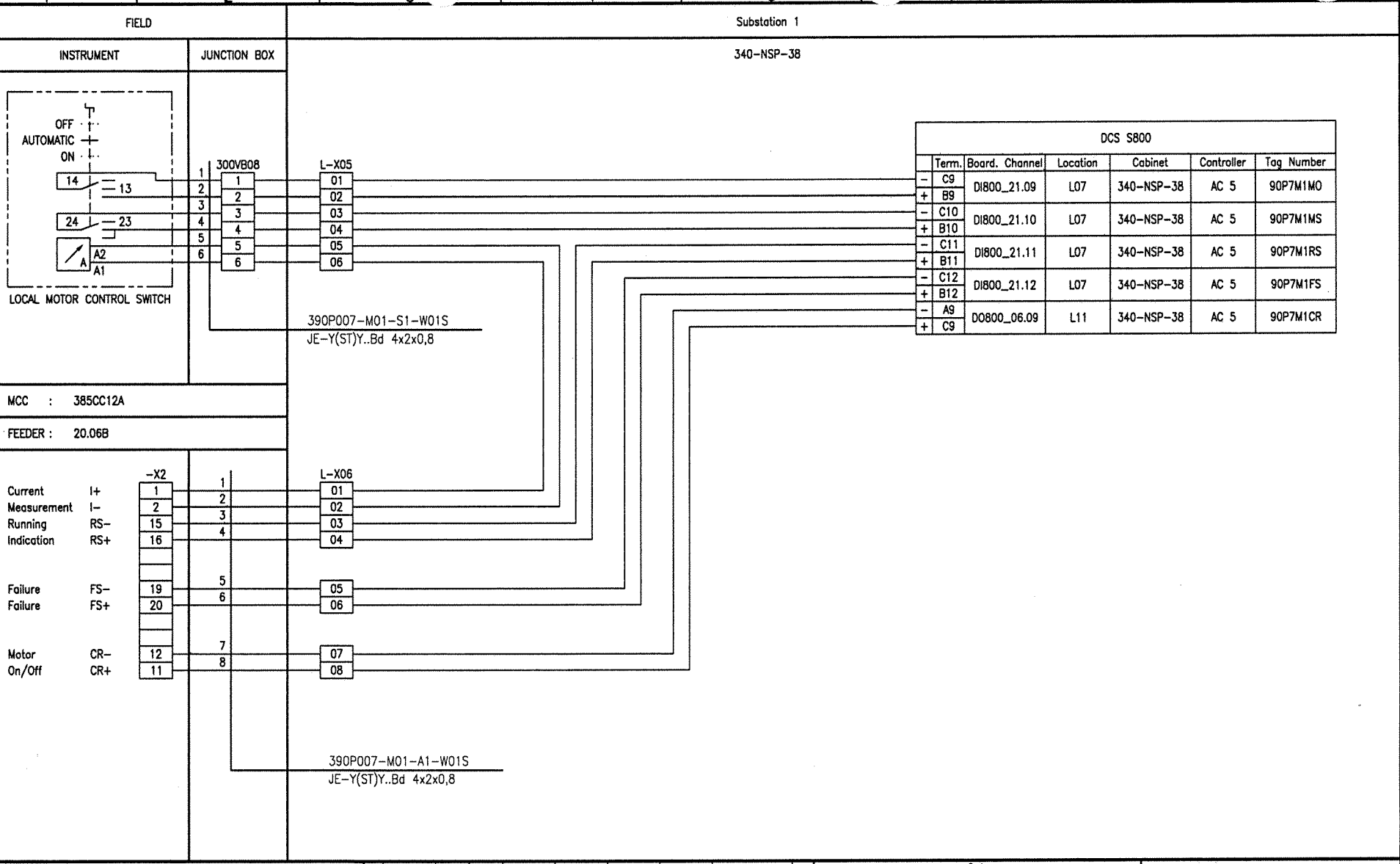

Document-ID-BAR-Code

Rev.	Date	Name	Date	Name	Date	Name	Description	Acc. Code
01	20.09.06	Hie	Hie	20.09.06	Heuer	20.09.06	Heuer	AS BUILT
	Drawn/Prepared			Checked		Approved		

UAN	Code: Document ID	Part	Rev.	Group
01-3040	UD-EL-G00-FS-0001		01	

Uhde

All rights reserved © Uhde GmbH

Pro. Unit	TON	Cat. Code	Acc. Code	Status
Con. Unit	Type of Document: DH	Order No.	Scale	Tot. Sheets

	Date	Name
Drawn	08.04.2005	Hielscher
Prepared	08.04.2005	Hohmann
Checked	08.04.2005	Heuer
Approved	08.04.2005	Heuer

AMMONIA / UREA PROJECT SUEZ II

Designation
Wiring diagram
390P007-M01

Store Location: Server
\\p013040\013040-ADA

Store Location: Folder
\Ei-ET\DH_ei-wiring-diag\

Store Name
01-3040_390P007-M01_000_01.dwg

ISO A3

BORDER-A3_013040.dwg / A003A3_013040.dwg / 17.05.2004

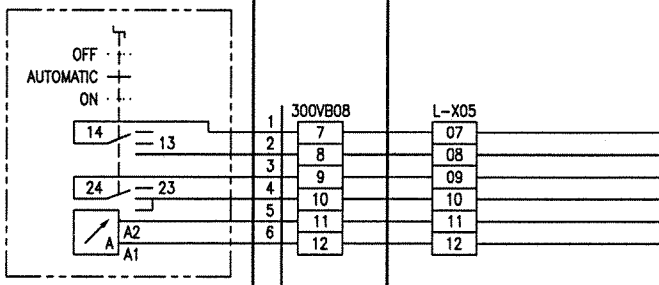

Document-ID-BAR-Code

Rev.	Date	Name	Date	Name	Date	Name	Description	Acc. Code
01	20.09.06	Hie	20.09.06	Heuer	20.09.06	Heuer	AS BUILT	
	Drawn/Prepared		Checked		Approved			

UAN	Code: Document ID	Part	Rev.	Group
01-3040	UD-EL-G00-FS-0001		01	

Uhde

All rights reserved © Uhde GmbH

Pro. Unit	TON	Cat. Code	Acc. Code	Status
Con. Unit	Type of Document: DH	Order No.	Scale	Tot. Sheets

	Date	Name
Drawn	08.04.2005	Hielscher
Prepared	08.04.2005	Hohmann
Checked	08.04.2005	Heuer
Approved	08.04.2005	Heuer

AMMONIA / UREA PROJECT SUEZ II

Designation: Wiring diagram 390P008-M01

Store Location: Server: \\p013040\013040-ADA
Store Location: Folder: \EI-ET\DH_el-wiring-diag\
Store Name: 01-3040_390P008-M01_000_01.dwg

ISO A3

BORDER-A3_013040.dwg / A003A3_013040.dwg / 17.05.2004

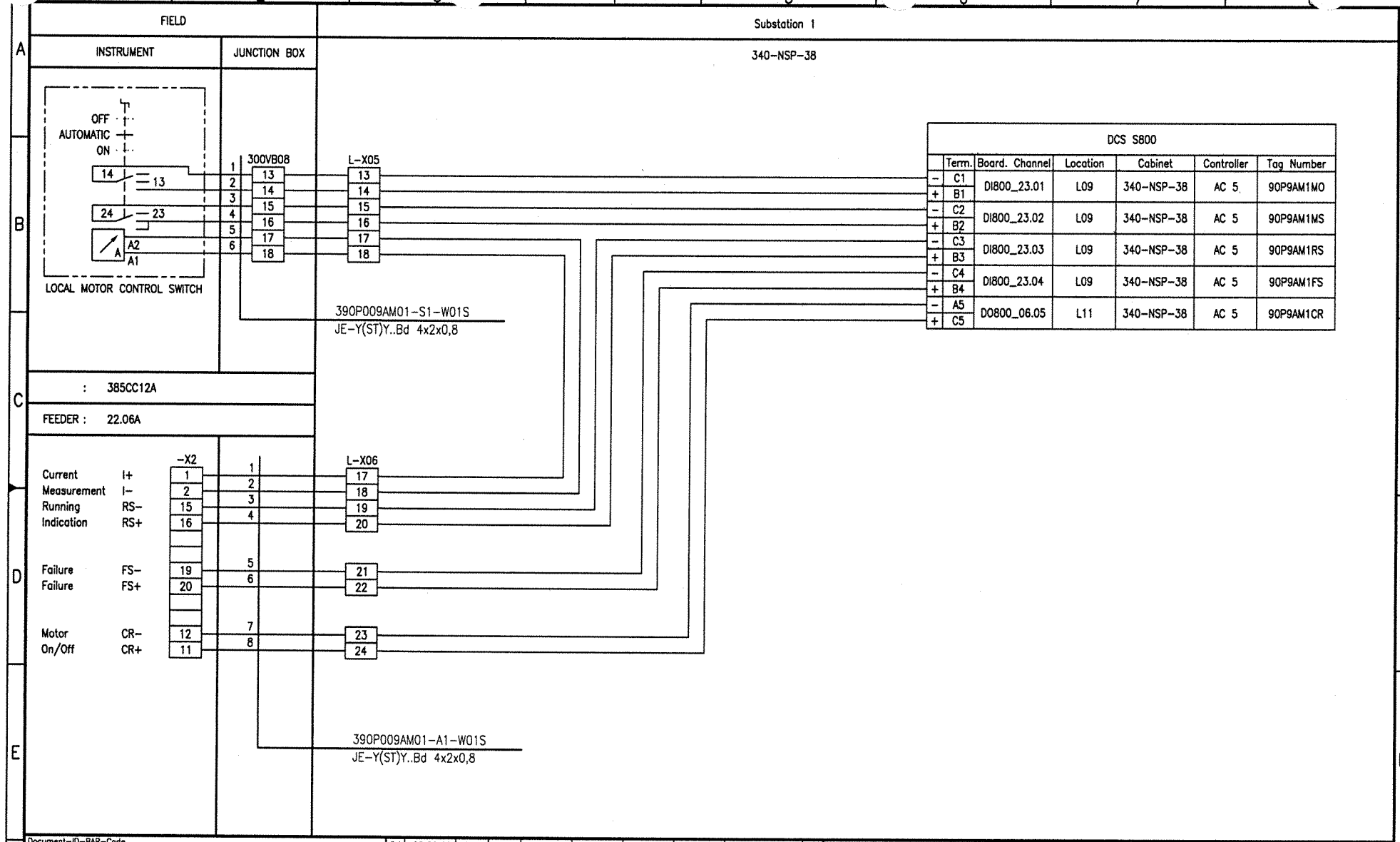

Document-ID-BAR-Code

Rev.	Date	Name (Drawn/Prepared)	Date	Name (Checked)	Date	Name (Approved)	Description	Acc. Code
01	20.09.06	Hie Hie	20.09.06	Heuer	20.09.06	Heuer	AS BUILT	

UAN	Document ID	Part	Rev.	Group
01-3040	UD-EL-G00-FS-0001		01	

Code

Uhde

All rights reserved © Uhde GmbH

Pro. Unit	TON	Cat. Code	Acc. Code	Status
Con. Unit	Type of Document: DH	Order No.	Scale	Tot. Sheets

	Date	Name
Drawn	08.04.2005	Hielscher
Prepared	08.04.2005	Hohmann
Checked	08.04.2005	Heuer
Approved	08.04.2005	Heuer

AMMONIA / UREA PROJECT SUEZ II

Designation
Wiring diagram
390P009AM01

Store Location: Server \\p013040\013040-ADA
Store Location: Folder \EI-ET\DH_el-wiring-diag\
Store Name 01-3040_390P009AM01_000_01.dwg

ISO A3

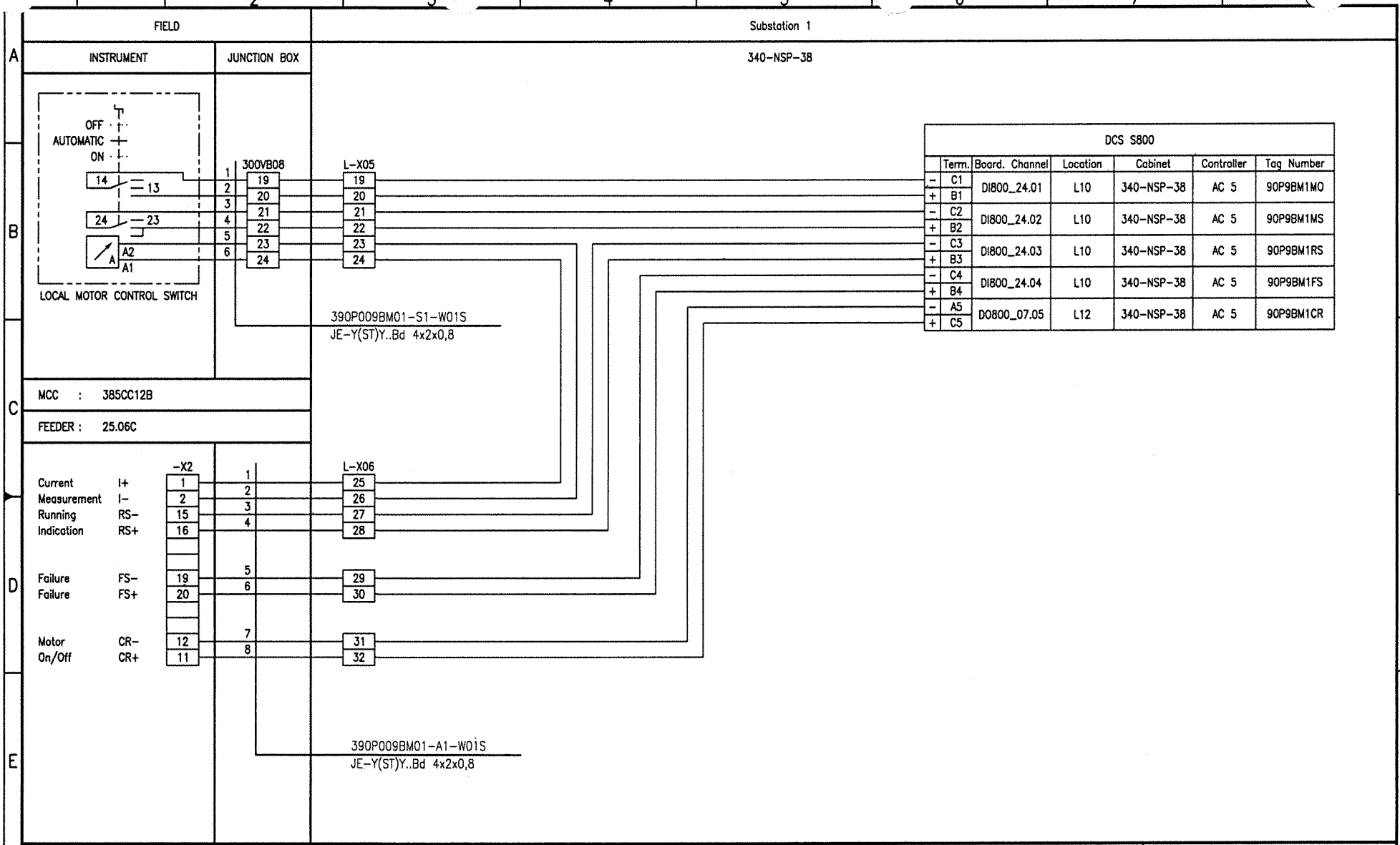
FIELD
Substation 1
INSTRUMENT
JUNCTION BOX
340-NSP-38
OFF
AUTOMATIC
ON
14
13
24
23
A2
A1
LOCAL MOTOR CONTROL SWITCH
300VB08
L-X05
390P009BM01-S1-W01S
JE-Y(ST)Y..Bd 4x2x0,8
MCC : 385CC12B
FEEDER : 25.06C
-X2
L-X06
Current Measurement I+ I-
Running Indication RS- RS+
Failure FS-
Failure FS+
Motor On/Off CR- CR+
390P009BM01-A1-W01S
JE-Y(ST)Y..Bd 4x2x0,8
DCS S800
Term. Board. Channel Location Cabinet Controller Tag Number
C1 B1 DI800_24.01 L10 340-NSP-38 AC 5 90P9BM1MO
C2 B2 DI800_24.02 L10 340-NSP-38 AC 5 90P9BM1MS
C3 B3 DI800_24.03 L10 340-NSP-38 AC 5 90P9BM1RS
C4 B4 DI800_24.04 L10 340-NSP-38 AC 5 90P9BM1FS
A5 C5 DO800_07.05 L12 340-NSP-38 AC 5 90P9BM1CR
BORDER-A3_013040.dwg / AG3A3_013040.dwg / 17.05.2004
Document-ID-BAR-Code
01 20.09.06 Hie Hie 20.09.06 Heuer 20.09.06 Heuer AS BUILT
Rev. Date Name Date Name Date Name Description Acc. Code
Drawn/Prepared Checked Approved
UAN 01-3040
Code Document ID UD-EL-G00-FS-0001 Part Rev. 01 Group
Uhde
All rights reserved © Uhde GmbH
Pro. Unit TON Cat. Code Acc. Code Status
Con. Unit Type of Document DH Order No. Scale Tot. Sheets
Drawn 08.04.2005 Hielscher
Prepared 08.04.2005 Hohmann
Checked 08.04.2005 Heuer
Approved 08.04.2005 Heuer
AMMONIA / UREA PROJECT SUEZ II
Designation
Wiring diagram 390P009BM01
Store Location: Server \\p013040.kud.krupp.com\013040-ADA
Store Location: Folder \EI-ET\DH_el-wiring-diag\
Store Name 01-3040_390P009BM01_000_01.dwg
ISO A3

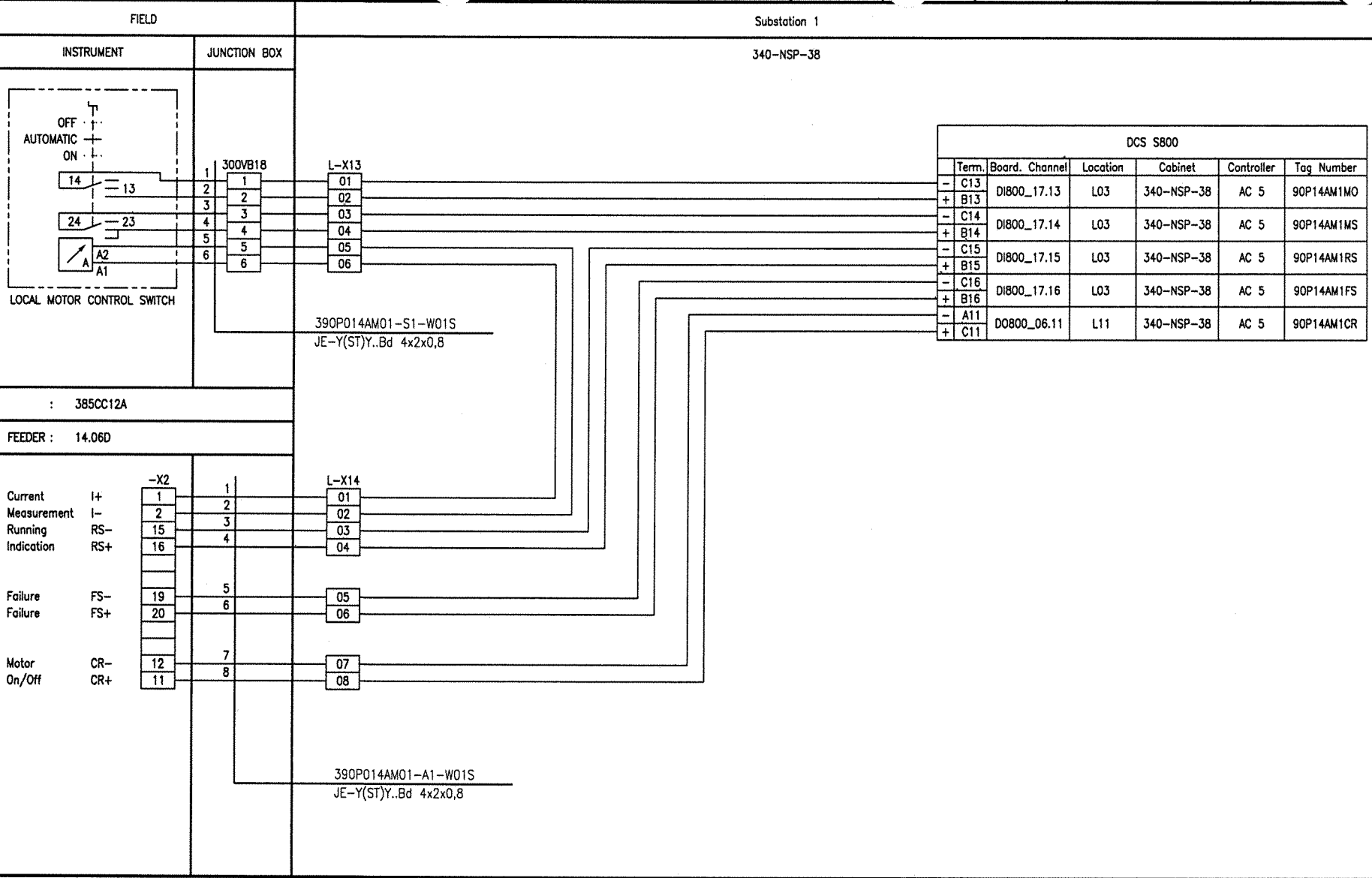

Document-ID-BAR-Code

Rev.	Date	Name	Date	Name	Date	Name	Description	Acc. Code
01	20.09.06	Hie	20.09.06	Heuer	20.09.06	Heuer	AS BUILT	
	Drawn/Prepared		Checked		Approved			

UAN	Document ID	Part	Rev.	Group
01-3040	UD-EL-G00-FS-0001		01	

Code

Pro. Unit | TON | Cat. Code | Acc. Code | Status

Con. Unit | Type of Document: DH | Order No. | Scale | Tot. Sheets

	Date	Name
Drawn	08.04.2005	Hielscher
Prepared	08.04.2005	Hohmann
Checked	08.04.2005	Heuer
Approved	08.04.2005	Heuer

Store Location: Server \\p013040.kud.krupp.com\013040-ADA

Store Location: Folder \EI-ET\DH_el-wiring-diag\

Store Name 01-3040_390P014AM01_000_01.dwg

AMMONIA / UREA PROJECT SUEZ II

Uhde

All rights reserved © Uhde GmbH

Designation
Wiring diagram
390P014AM01

ISO A3

BORDER-A3_013040.dwg / ACG3A3_013040.dwg / 17.05.2004

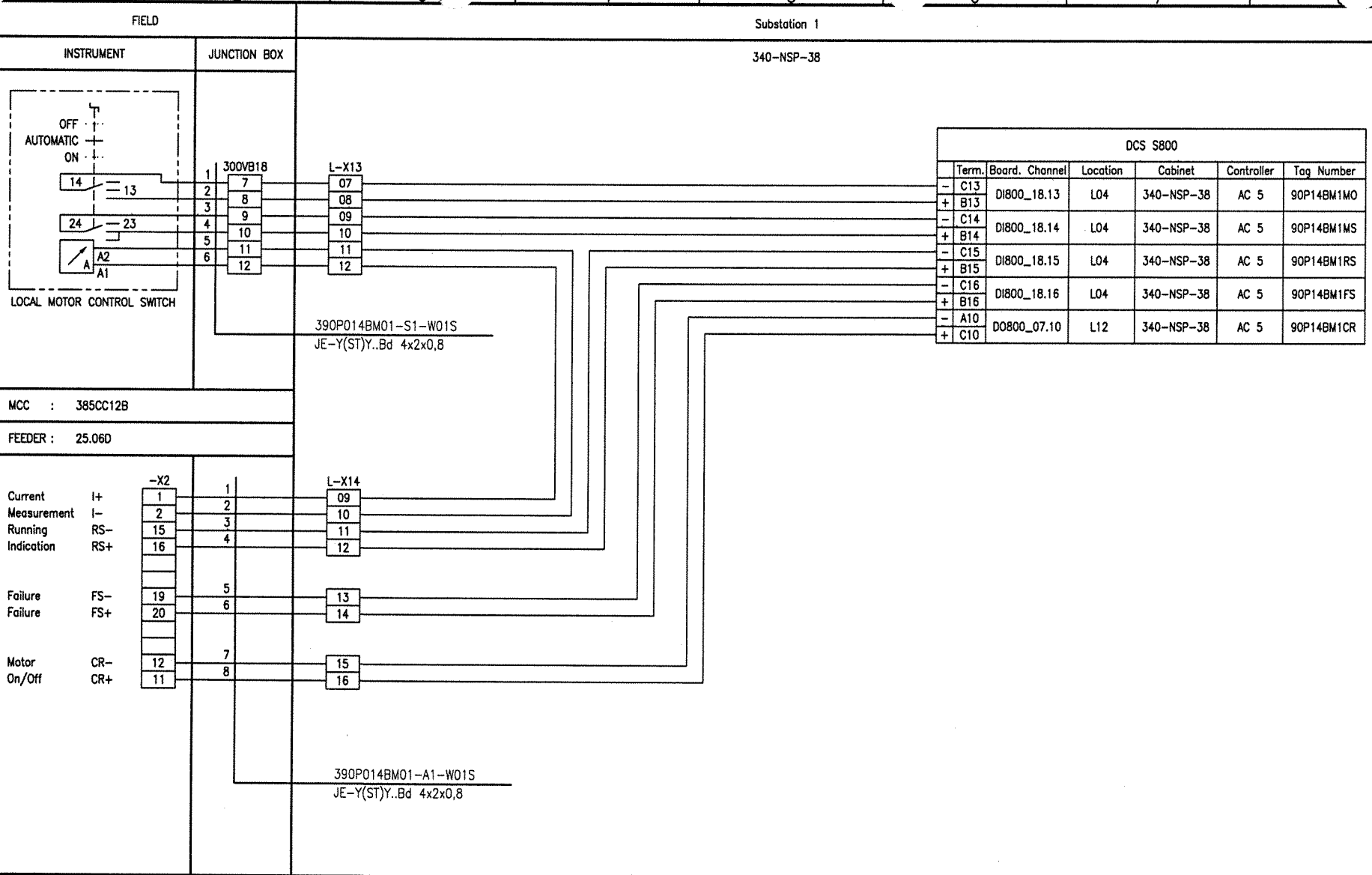

Document-ID-BAR-Code

Rev.	Date	Name (Drawn/Prepared)	Date	Name (Checked)	Date	Name (Approved)	Description	Acc. Code
01	20.09.06	Hie Hie	20.09.06	Heuer	20.09.06	Heuer	AS BUILT	

UAN	Document ID	Part	Rev.	Group
01-3040	UD-EL-G00-FS-0001		01	

Code

Uhde

All rights reserved © Uhde GmbH

Pro. Unit	TON	Cat. Code	Acc. Code	Status
Con. Unit	Type of Document: DH	Order No.	Scale	Tot. Sheets

	Date	Name
Drawn	08.04.2005	Hielscher
Prepared	08.04.2005	Hohmann
Checked	08.04.2005	Heuer
Approved	08.04.2005	Heuer

AMMONIA / UREA PROJECT SUEZ II

Designation
Wiring diagram
390P014BM01

Store Location: Server \\p013040.kud.krupp.com\013040-ADA
Store Location: Folder \EI-ET\DH_el-wiring-diag\
Store Name 01-3040_390P014BM01_000_01.dwg

ISO A3

BORDER-A3_013040.dwg / A03A3_013040.dwg / 17.05.2004

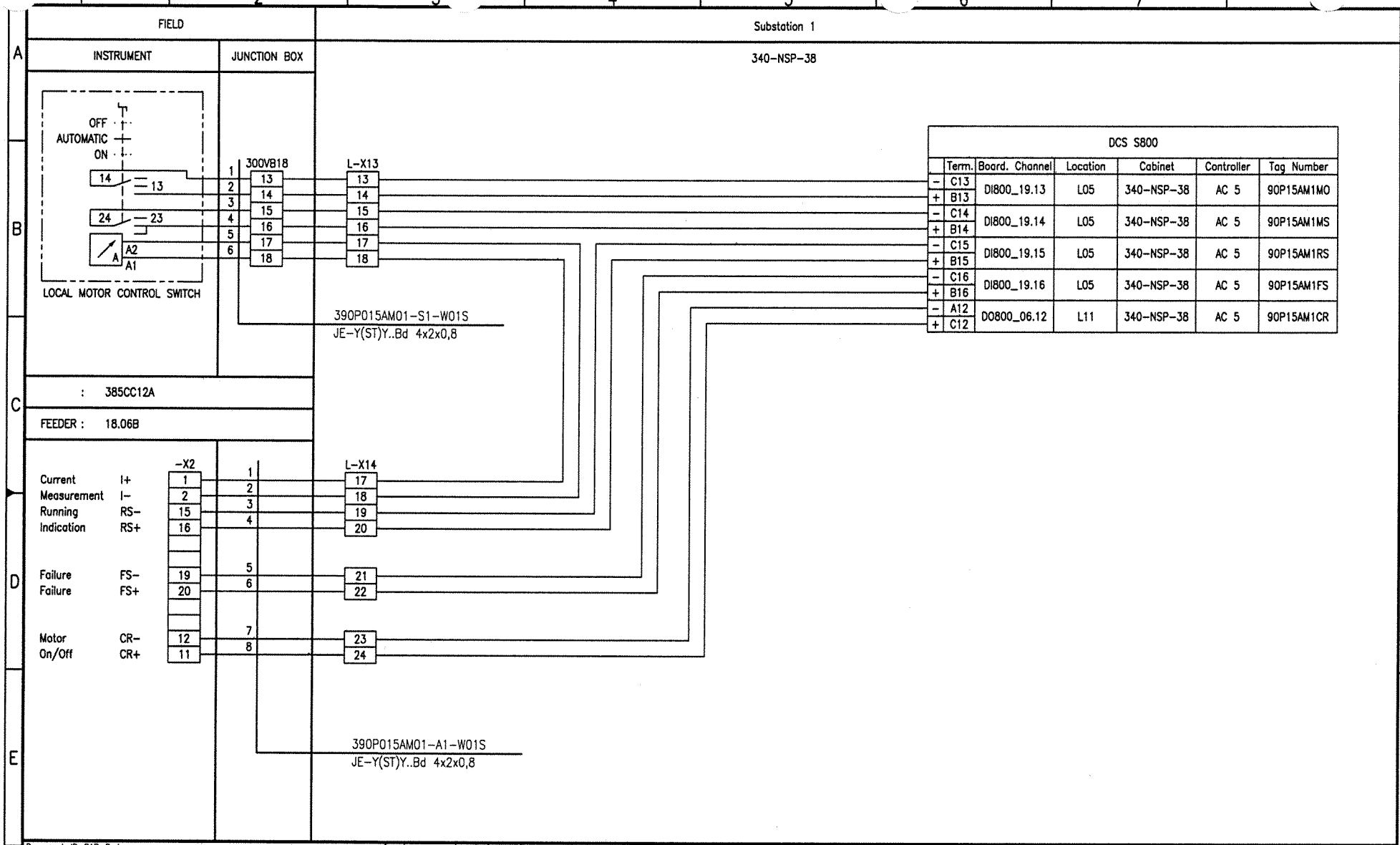

Document-ID-BAR-Code

Rev.	Date	Name (Drawn/Prepared)	Date	Name (Checked)	Date	Name (Approved)	Description	Acc. Code
01	20.09.06	Hie Hie	20.09.06	Heuer	20.09.06	Heuer	AS BUILT	

UAN	Document ID	Part	Rev.	Group
01-3040	UD-EL-G00-FS-0001		01	

Code

Uhde

All rights reserved © Uhde GmbH

Pro. Unit	TON	Cat. Code	Acc. Code	Status

Con. Unit	Type of Document	Order No.	Scale	Tot. Sheets
	DH			

	Date	Name
Drawn	08.04.2005	Hielscher
Prepared	08.04.2005	Hohmann
Checked	08.04.2005	Heuer
Approved	08.04.2005	Heuer

AMMONIA / UREA PROJECT SUEZ II

Designation
Wiring diagram
390P015AM01

Store Location: Server
\\p013040.kud.krupp.com\013040-ADA

Store Location: Folder
\EI-ET\DH_el-wiring-diag\

Store Name
01-3040_390P015AM01_000_01.dwg

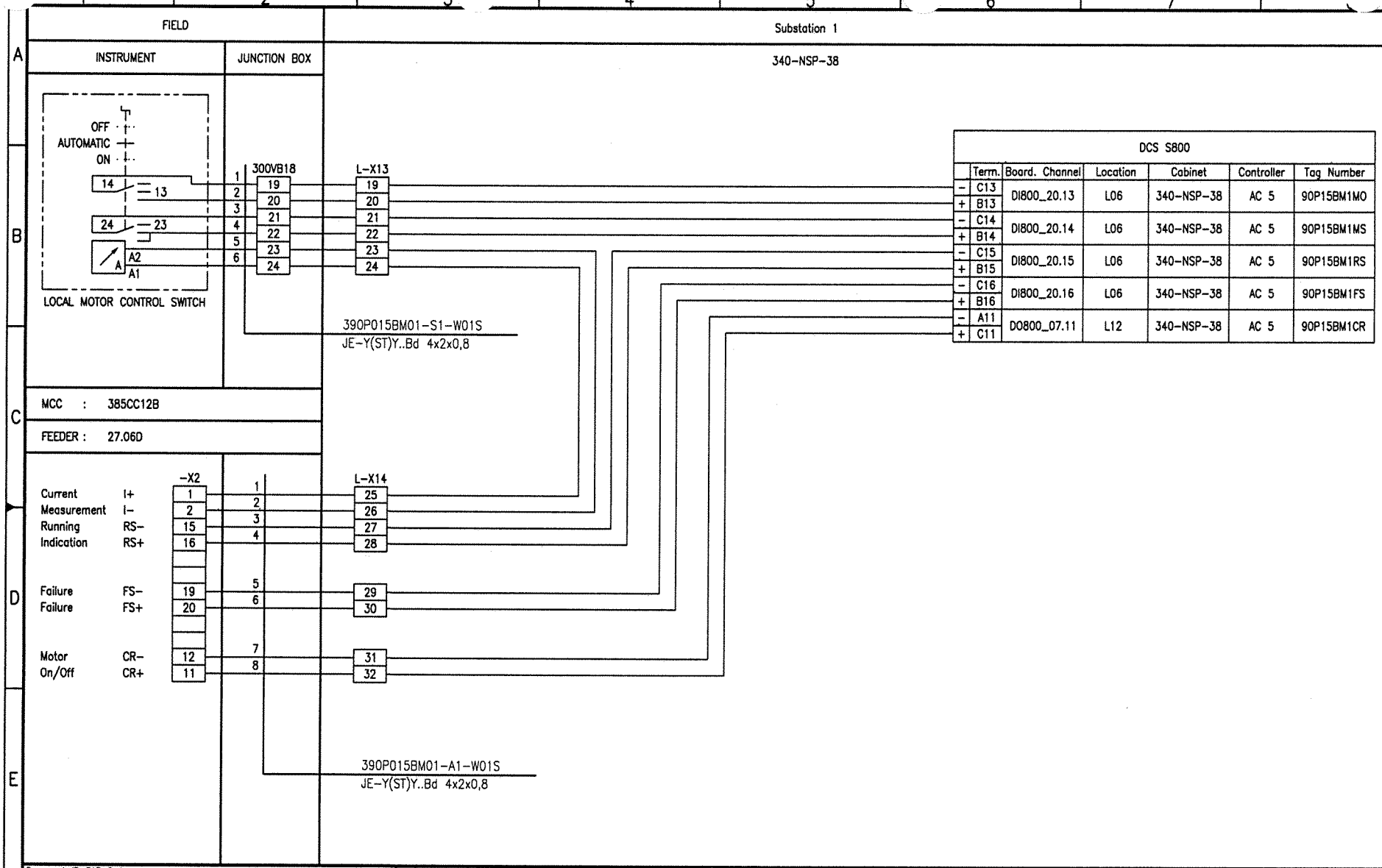

Document-ID-BAR-Code

Rev.	Date	Name	Date	Name	Date	Name	Description	Acc. Code
01	20.09.06	Hie	20.09.06	Heuer	20.09.06	Heuer	AS BUILT	
	Drawn/Prepared		Checked		Approved			

UAN	Document ID	Part	Rev.	Group
01-3040	UD-EL-G00-FS-0001		01	

Code

Pro. Unit	TON	Cat. Code	Acc. Code	Status

Con. Unit	Type of Document	Order No.	Scale	Tot. Sheets
	DH			

	Date	Name
Drawn	08.04.2005	Hielscher
Prepared	08.04.2005	Hohmann
Checked	08.04.2005	Heuer
Approved	08.04.2005	Heuer

Store Location: Server
\\p013040.kud.krupp.com\013040-ADA

Store Location: Folder
\EI-ET\DH_el-wiring-diag\

Store Name
01-3040_390P015BM01_000_01.dwg

AMMONIA / UREA
PROJECT
SUEZ II

Uhde

All rights reserved
© Uhde GmbH

Designation
Wiring diagram
390P015BM01

ISO A3

BORDER-A3_013040.dwg / AC03A3_013040.dwg / 17.05.2004

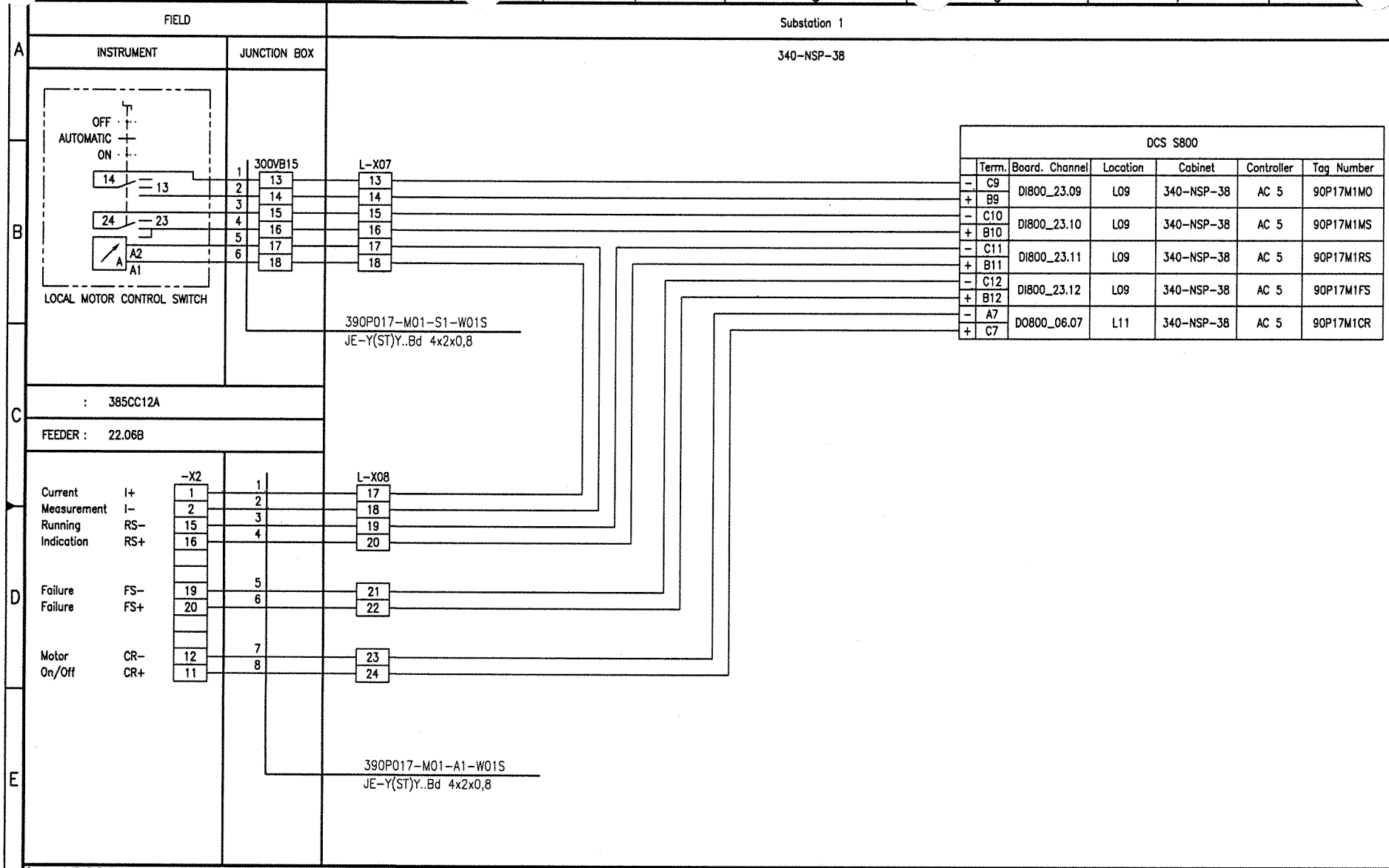

Document-ID-BAR-Code

Rev.	Date	Name (Drawn/Prepared)	Date	Name (Checked)	Date	Name (Approved)	Description	Acc. Code
01	20.09.06	Hie Hie	20.09.06	Heuer	20.09.06	Heuer	AS BUILT	

UAN	Document ID	Part	Rev.	Group
01-3040	UD-EL-G00-FS-0001		01	

Code

Uhde

All rights reserved © Uhde GmbH

Pro. Unit	TON	Cat. Code	Acc. Code	Status
Con. Unit	Type of Document: DH	Order No.	Scale	Tot. Sheets

	Date	Name
Drawn	08.04.2005	Hielscher
Prepared	08.04.2005	Hohmann
Checked	08.04.2005	Heuer
Approved	08.04.2005	Heuer

AMMONIA / UREA PROJECT SUEZ II

Designation
Wiring diagram
390P017-M01

Store Location: Server
\\p013040.kud.krupp.com\013040-ADA

Store Location: Folder
\Ei-ET\DH_el-wiring-diag\

Store Name
01-3040_390P017-M01_000_01.dwg

ISO A3

BORDER-A3_013040.dwg / AG03A3_013040.dwg / 17.05.2004

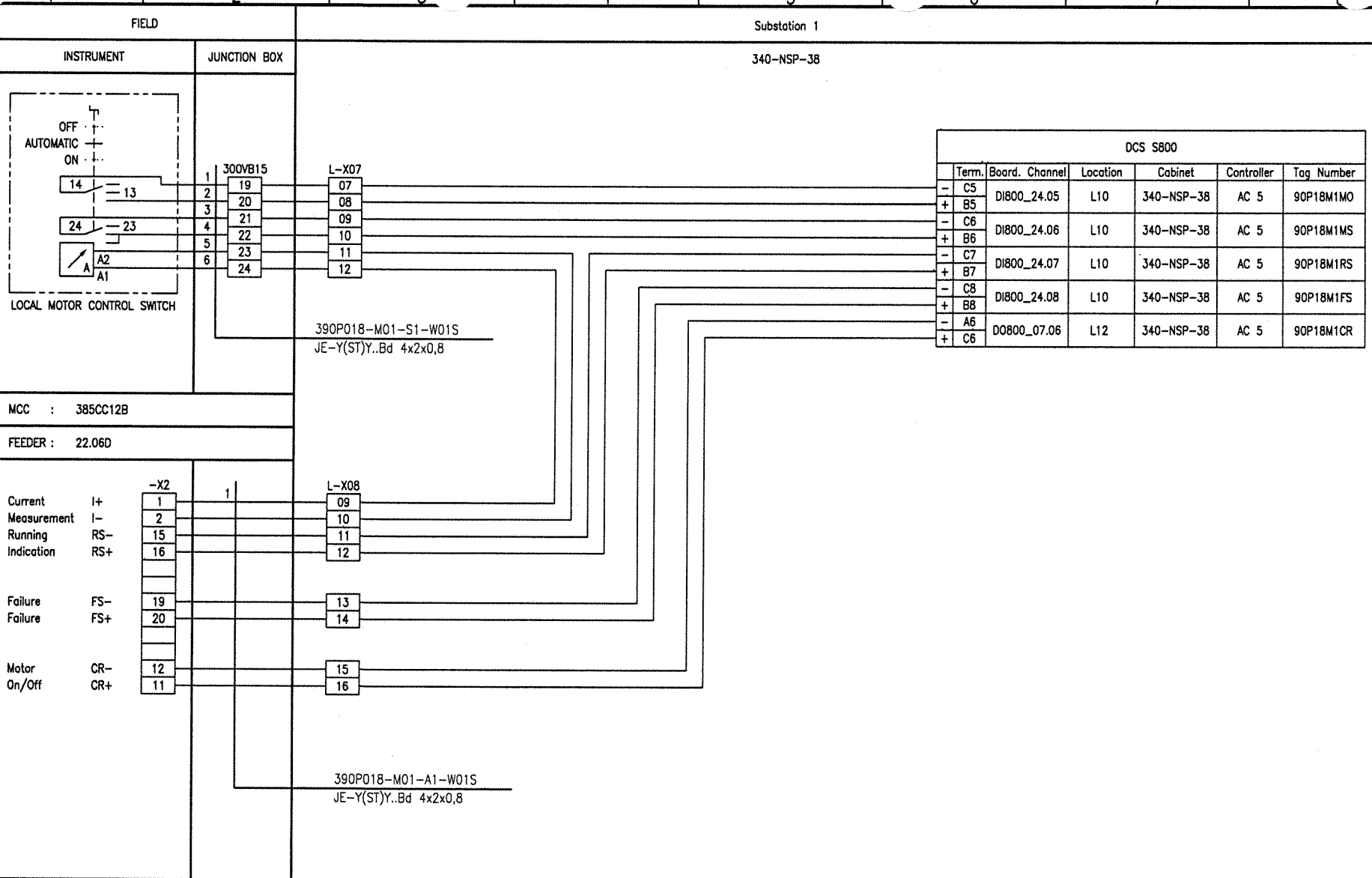

Document-ID-BAR-Code

Rev.	Date	Name	Date	Name	Date	Name	Description	Acc. Code
01	20.09.06	Hie	20.09.06	Heuer	20.09.06	Heuer	AS BUILT	
	Drawn/Prepared		Checked		Approved			

UAN	Document ID	Part	Rev.	Group
01-3040	UD-EL-G00-FS-0001		01	

Code

Pro. Unit | TON | Cat. Code | Acc. Code | Status

Con. Unit | Type of Document: DH | Order No. | Scale | Tot. Sheets

	Date	Name
Drawn	08.04.2005	Hielscher
Prepared	08.04.2005	Hohmann
Checked	08.04.2005	Heuer
Approved	08.04.2005	Heuer

AMMONIA / UREA PROJECT SUEZ II

Uhde

All rights reserved © Uhde GmbH

Designation
Wiring diagram
390P018-M01

Store Location: Server
\\p013040.kud.krupp.com\013040-ADA

Store Location: Folder
\EI-ET\DH_el-wiring-diag\

Store Name
01-3040_390P018-M01_000_01.dwg

ISO A3

BORDER-A3_013040.dwg / A0A3A3_013040.dwg / 17.05.2004

CONTENTS

Loop Index (S 800 MOTORS) Processunit 391
Fire Water

Tag No.	Rev.	Crossreference: See	Remarks	File No.
391P004AM01	00			
391P004BM01	00			

Note:

Connection to be made in SUEZ 1

I:\Ei-EF\DH_el-wiring-diag\01-3040_Wiring_diagrams_coversheet_01.doc

FIELD	
INSTRUMENT	JUNCTION BOX

CONNECTION TO BE MADE IN EFC I

BORDER-A3_013040.dwg / A003A3_013040.dwg / 17.05.2004

Document-ID-BAR-Code																
	00															
	Rev.	Date	Name	Date	Name	Date	Name	Description	Acc. Code	UAN	Document ID	Part	Rev.	Group	Uhde	All rights reserved © Uhde GmbH
		Drawn/Prepared		Checked		Approved				01-3040	UD-EL-G00-FS-0001					
	Pro. Unit	TON		Cat. Code	Acc. Code	Status										
	Con. Unit	Type of Document	Order No.	Scale		Tot. Sheets										
		DH														

	Date	Name
Drawn	20.09.2006	Hielscher
Prepared	20.09.2006	Hielscher
Checked	20.09.2006	Heuer
Approved	20.09.2006	Heuer

AMMONIA / UREA
PROJECT
SUEZ II

Designation
Wiring diagram
391P004AM01

Store Location: Server
\\p013040.do.de.uhde.org\013040-ADA

Store Location: Folder
\EI-ET\DH_el-wiring-diag\

Store Name
01-3040_391P004AM01_000_00.dwg

SO A3

FIELD	
INSTRUMENT	JUNCTION BOX

CONNECTION TO BE MADE IN EFC I

BORDER-A3_013040.dwg / AGO3A3_013040.dwg / 17.05.2004

Document-ID-BAR-Code

Rev.	Date	Name	Date	Name	Date	Name	Description	Acc. Code
	Drawn/Prepared		Checked		Approved			
00								

Pro. Unit	TON	Cat. Code	Acc. Code	Status

Con. Unit	Type of Document	Order No.	Scale	Tot. Sheets
	DH			

Store Location: Server	Store Location: Folder	Store Name
\\p013040.do.de.uhde.org\013040-ADA	\EI-ET\DH_el-wiring-diag\	01-3040_391P004BM01_000_00.dwg

UAN	Code: Document ID	Part	Rev.	Group
01-3040	UD-EL-G00-FS-0001			

Uhde

All rights reserved © Uhde GmbH

	Date	Name
Drawn	20.09.2006	Hielscher
Prepared	20.09.2006	Hielscher
Checked	20.09.2006	Heuer
Approved	20.09.2006	Heuer

AMMONIA / UREA
PROJECT
SUEZ II

Designation
Wiring diagram
391P004BM01

ISO A3

CONTENTS

Loop Index (S 800 MOTORS) Processunit 392
Waste Water System

Tag No.	Rev.	Crossreference: See	Remarks	File No.
392P001AM01	01			
392P001BM01	01			
392P002-M01	01			

I:\Ei-ET\DH_el-wiring-diag\01-3040_Wiring_diagrams_coversheet_01.doc

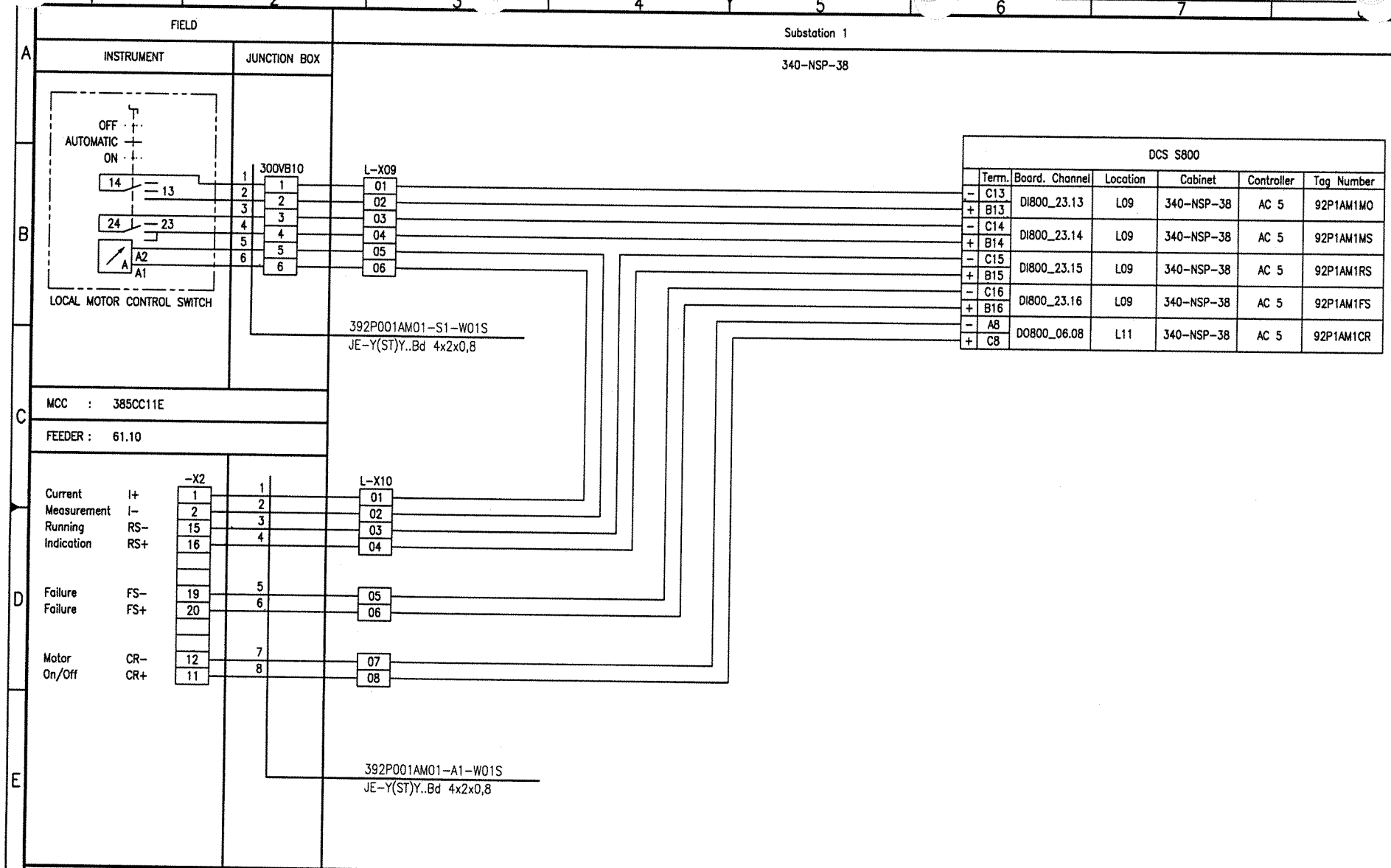
FIELD
INSTRUMENT
JUNCTION BOX
Substation 1
340-NSP-38
OFF
AUTOMATIC
ON
14
13
24
23
A2
A1
LOCAL MOTOR CONTROL SWITCH
300VB10
L-X09
392P001AM01-S1-W01S
JE-Y(ST)Y..Bd 4x2x0,8
MCC : 385CC11E
FEEDER : 61.10
-X2
L-X10
Current Measurement I+ I-
Running Indication RS- RS+
Failure FS- FS+
Motor On/Off CR- CR+
392P001AM01-A1-W01S
JE-Y(ST)Y..Bd 4x2x0,8
DCS S800
Term. Board. Channel Location Cabinet Controller Tag Number
C13 B13 DI800_23.13 L09 340-NSP-38 AC 5 92P1AM1MO
C14 B14 DI800_23.14 L09 340-NSP-38 AC 5 92P1AM1MS
C15 B15 DI800_23.15 L09 340-NSP-38 AC 5 92P1AM1RS
C16 B16 DI800_23.16 L09 340-NSP-38 AC 5 92P1AM1FS
A8 C8 DO800_06.08 L11 340-NSP-38 AC 5 92P1AM1CR
BORDER-A3_013040.dwg / A03A3_013040.dwg / 17.05.2004
Document-ID-BAR-Code
01 20.09.06 Hie Hie 20.09.06 Heuer 20.09.06 Heuer AS BUILT
Rev. Date Name Drawn/Prepared Date Name Checked Date Name Approved Description Acc. Code
UAN 01-3040
Code Document ID UD-EL-G00-FS-0001 Part Rev. 01 Group
Uhde
All rights reserved © Uhde GmbH
Pro. Unit TON Cat. Code Acc. Code Status
Con. Unit Type of Document DH Order No. Scale Tot. Sheets
Date Name
Drawn 08.04.2005 Hielscher
Prepared 08.04.2005 Hohmann
Checked 08.04.2005 Heuer
Approved 08.04.2005 Heuer
AMMONIA / UREA PROJECT SUEZ II
Designation
Wiring diagram 392P001AM01
Store Location: Server \\p013040.kud.krupp.com\013040-ADA
Store Location: Folder \EI-ET\DH_el-wiring-diag\
Store Name 01-3040_392P001AM01_000_01.dwg
ISO A3

FIELD | Substation 1

INSTRUMENT | JUNCTION BOX | 340-NSP-38

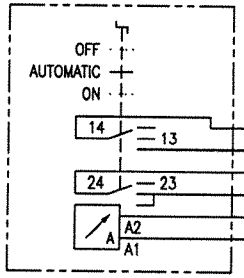

LOCAL MOTOR CONTROL SWITCH

300VB10: 1, 2, 3, 4, 5, 6 — 7, 8, 9, 10, 11, 12

L-X09: 07, 08, 09, 10, 11, 12

392P001BM01-S1-W01S
JE-Y(ST)Y..Bd 4x2x0,8

MCC : 385CC11E

FEEDER : 61.12

		-X2		L-X10
Current Measurement	I+	1	1	09
	I-	2	2	10
Running Indication	RS-	15	3	11
	RS+	16	4	12
Failure	FS-	19	5	13
Failure	FS+	20	6	14
Motor On/Off	CR-	12	7	15
	CR+	11	8	16

392P001BM01-A1-W01S
JE-Y(ST)Y..Bd 4x2x0,8

DCS S800

	Term.	Board. Channel	Location	Cabinet	Controller	Tag Number
-	C13	DI800_24.13	L10	340-NSP-38	AC 5	92P1BM1MO
+	B13					
-	C14	DI800_24.14	L10	340-NSP-38	AC 5	92P1BM1MS
+	B14					
-	C15	DI800_24.15	L10	340-NSP-38	AC 5	92P1BM1RS
+	B15					
-	C16	DI800_24.16	L10	340-NSP-38	AC 5	92P1BM1FS
+	B16					
-	A8	DO800_07.08	L12	340-NSP-38	AC 5	92P1BM1CR
+	C8					

Document-ID-BAR-Code

Rev.	Date	Name (Drawn/Prepared)	Date	Name (Checked)	Date	Name (Approved)	Description	Acc. Code
01	20.09.06	Hie	20.09.06	Heuer	20.09.06	Heuer	AS BUILT	

UAN	Document ID	Part	Rev.	Group
01-3040	UD-EL-G00-FS-0001		01	

Code

Uhde

All rights reserved © Uhde GmbH

Pro. Unit	TON	Cat. Code	Acc. Code	Status

Con. Unit	Type of Document	Order No.	Scale	Tot. Sheets
	DH			

	Date	Name
Drawn	08.04.2005	Hielscher
Prepared	08.04.2005	Hohmann
Checked	08.04.2005	Heuer
Approved	08.04.2005	Heuer

AMMONIA / UREA PROJECT SUEZ II

Designation
Wiring diagram
392P001BM01

Store Location: Server
\\p013040.kud.krupp.com\013040-ADA

Store Location: Folder
\Ei-ET\DH_el-wiring-diag\

Store Name
01-3040_392P001BM01_000_01.dwg

ISO A3

BORDER-A3_013040.dwg / AG03A3_013040.dwg / 17.05.2004

FIELD | Substation 1

INSTRUMENT | JUNCTION BOX | 340-NSP-38

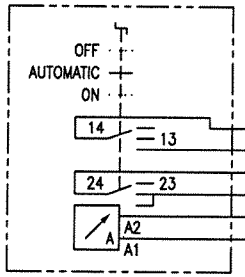

LOCAL MOTOR CONTROL SWITCH

300VB10

L-X09

1	13	13	
2	14	14	
3	15	15	
4	16	16	
5	17	17	
6	18	18	

392P002-M01-S1-W01S
JE-Y(ST)Y..Bd 4x2x0,8

MCC : 385CC11A

FEEDER : 14.16

-X2

L-X10

		-X2		L-X10
Current Measurement	I+	1	1	17
	I-	2	2	18
Running Indication	RS-	15	3	19
	RS+	16	4	20
Failure	FS-	19	5	21
Failure	FS+	20	6	22
Motor On/Off	CR-	12	7	23
	CR+	11	8	24

392P002-M01-A1-W01S
JE-Y(ST)Y..Bd 4x2x0,8

DCS S800

	Term.	Board. Channel	Location	Cabinet	Controller	Tag Number
-	C13	DI800_22.13	L08	340-NSP-38	AC 5	92P2M1MO
+	B13					
-	C14	DI800_22.14	L08	340-NSP-38	AC 5	92P2M1MS
+	B14					
+	C12	AI800_05.06	L01	340-NSP-38	AC 5	IT-392903
-	A12					
-	C15	DI800_22.15	L08	340-NSP-38	AC 5	92P2M1RS
+	B15					
-	C16	DI800_22.16	L08	340-NSP-38	AC 5	92P2M1FS
+	B16					
-	A9	DO800_07.09	L12	340-NSP-38	AC 5	92P2M1CR
+	C9					

Document-ID-BAR-Code

Rev.	Date	Name (Drawn/Prepared)	Date	Name (Checked)	Date	Name (Approved)	Description	Acc. Code
01	20.09.06	Hie Hie	20.09.06	Heuer	20.09.06	Heuer	AS BUILT	

UAN	Document ID	Part	Rev.	Group
01-3040	UD-EL-G00-FS-0001		01	

Code

Uhde

All rights reserved © Uhde GmbH

Pro. Unit	TON	Cat. Code	Acc. Code	Status
Con. Unit	Type of Document: DH	Order No.	Scale	Tot. Sheets

	Date	Name
Drawn	08.04.2005	Hielscher
Prepared	08.04.2005	Hohmann
Checked	08.04.2005	Heuer
Approved	08.04.2005	Heuer

AMMONIA / UREA PROJECT SUEZ II

Designation
Wiring diagram
392P002-M01

Store Location: Server
\\p013040.kud.krupp.com\013040-ADA

Store Location: Folder
\EI-ET\DH_el-wiring-diag\

Store Name
01-3040_392P002-M01_000_01.dwg

ISO A3

BORDER-A3_013040.dwg / A02343_013040.dwg / 17.05.2004

CONTENTS

Loop Index (S 800 MOTORS)
Air Conditioning

Tag No.	Rev.	Crossreference: See	Remarks	File No.
CU020A001-RM1-A1	00			
CU400A001-RM1-A1	00			
CU400A002-RM1-A1	00			
CU400A003-RM1-A1	00			
CU400A003-RM2-A1	00			
CU410A001-RM1-A1	00			
CU420A001-RM1-A1	00			
CU425A001-RM1-A1	00			
CU600A001-RM1-A1	00			

I:\Ej-ET\DH_el-wiring-diag\01-3040_Wiring_diagrams_coversheet_01.doc

FIELD	
INSTRUMENT	JUNCTION BOX

Substation 1

340-NSP-38

MCC : 385CC11E

FEEDER : +61.14

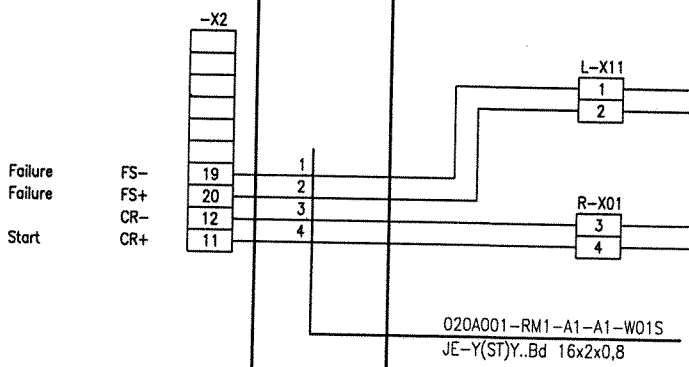

DCS S800						
	Term.	Board. Channel	Location	Cabinet	Controller	Tag Number
-	C3	DI800_25.03	R01	340-NSP-38	AC 3	020A1FS
+	A3					
-	A6	DO800_08.06	R02	340-NSP-38	AC 3	020A1CR
+	C6					

Document-ID-BAR-Code

Rev.	Date	Name	Date	Name	Date	Name	Description	Acc. Code
		Drawn/Prepared		Checked		Approved		

Pro. Unit	TON	Cat. Code	Acc. Code	Status
Con. Unit	Type of Document: DH	Order No.	Scale	Tot. Sheets

	Date	Name
Drawn	20.09.2006	Hielscher
Prepared	20.09.2006	Hielscher
Checked	20.09.2006	Heuer
Approved	20.09.2006	Heuer

UAN	Code: Document ID	Part	Rev.	Group
01-3040	UD-EL-G00-FS-0001		00	

Uhde

All rights reserved © Uhde GmbH

AMMONIA / UREA PROJECT SUEZ II

Designation: Wiring diagram 020A001-RM1-A1

Store Location: Server \\p013040\013040-ADA

Store Location: Folder \EI-ET\DH_el-wiring-diag\

Store Name 01-3040_020A001-RM1-A1_000_00.dwg

ISO A3

BORDER-A3_013040.dwg / AGD3A3_013040.dwg / 17.05.2004

FIELD	
INSTRUMENT	JUNCTION BOX

Substation 1

340-NSP-36

MCC : 385CC11E

FEEDER : +59.12

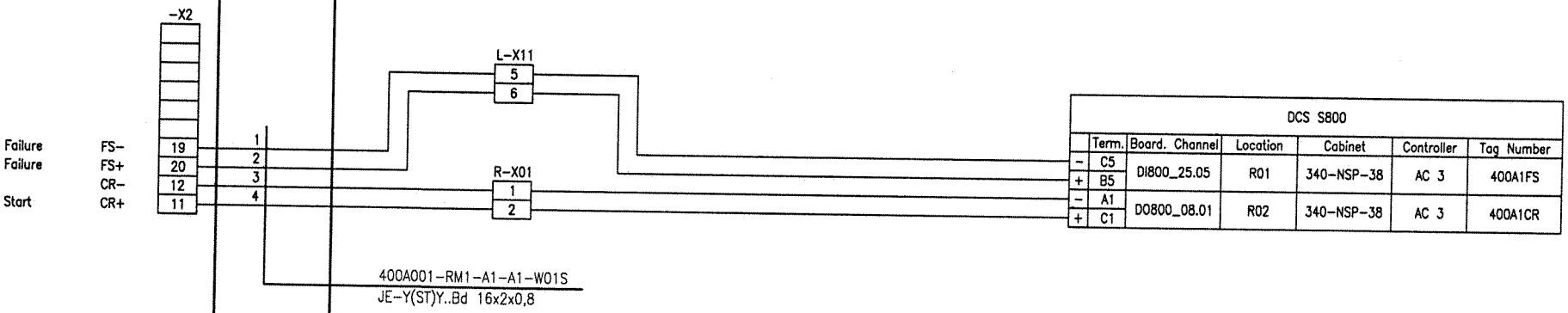

DCS S800						
	Term.	Board. Channel	Location	Cabinet	Controller	Tag Number
-	C5	DI800_25.05	R01	340-NSP-38	AC 3	400A1FS
+	B5					
-	A1	DO800_08.01	R02	340-NSP-38	AC 3	400A1CR
+	C1					

Document-ID-BAR-Code

Rev.	Date	Name	Date	Name	Date	Name	Description	Acc. Code
		Drawn/Prepared		Checked		Approved		

Pro. Unit	TON	Cat. Code	Acc. Code	Status
Con. Unit	Type of Document: DH	Order No.	Scale	Tot. Sheets

	Date	Name
Drawn	20.09.2006	Hielscher
Prepared	20.09.2006	Hielscher
Checked	20.09.2006	Heuer
Approved	20.09.2006	Heuer

Store Location: Server \\p013040.kud.krupp.com\013040-ADA

Store Location: Folder \EI-ET\DH_el-wiring-diag\

Store Name 01-3040_400A001-RM1-A1_000_00.dwg

UAN	Code: Document ID	Part	Rev.	Group
01-3040	UD-EL-G00-FS-0001		00	

Uhde

All rights reserved © Uhde GmbH

AMMONIA / UREA PROJECT SUEZ II

Designation
Wiring diagram
400A001-RM1-A1

ISO A3

BORDER-A3_013040.dwg / AG03A3_013040.dwg / 17.05.2004

FIELD	
INSTRUMENT	JUNCTION BOX

Substation 1

340-NSP-36

MCC : 385CC11E

FEEDER : +59.21

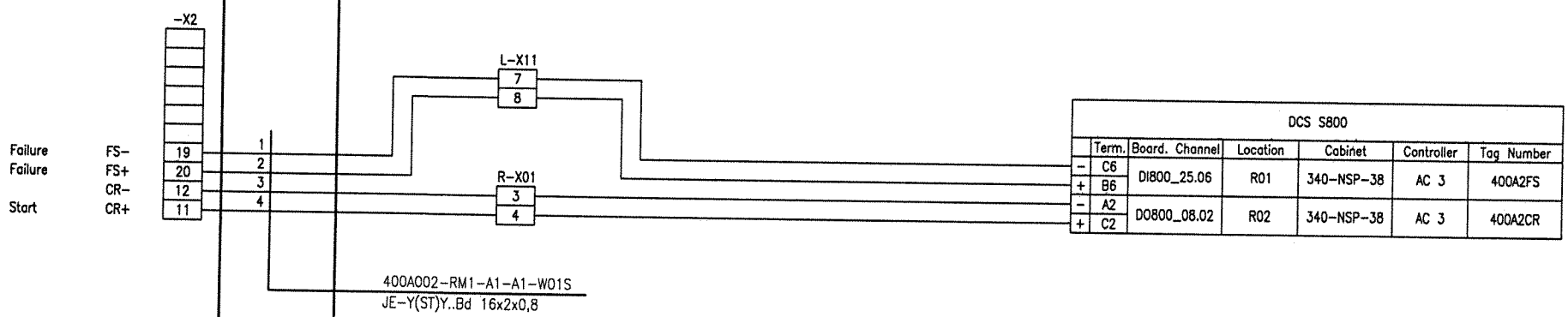

DCS S800

	Term.	Board. Channel	Location	Cabinet	Controller	Tag Number
-	C6	DI800_25.06	R01	340-NSP-38	AC 3	400A2FS
+	B6					
-	A2	DO800_08.02	R02	340-NSP-38	AC 3	400A2CR
+	C2					

Document-ID-BAR-Code

Rev.	Date	Name	Date	Name	Date	Name	Description	Acc. Code
		Drawn/Prepared		Checked		Approved		

Pro. Unit	TON	Cat. Code	Acc. Code	Status
Con. Unit	Type of Document: DH	Order No.	Scale	Tot. Sheets

	Date	Name
Drawn	20.09.2006	Hielscher
Prepared	20.09.2006	Hielscher
Checked	20.09.2006	Heuer
Approved	20.09.2006	Heuer

Store Location: Server \\p013040.kud.krupp.com\013040-ADA

Store Location: Folder \Ei-ET\DH_el-wiring-diag\

Store Name 01-3040_400A002-RM1-A1_000_00.dwg

UAN	Code: Document ID	Part	Rev.	Group
01-3040	UD-EL-G00-FS-0001		00	

Uhde

All rights reserved © Uhde GmbH

AMMONIA / UREA PROJECT SUEZ II

Designation
Wiring diagram
400A002-RM1-A1

ISO A3

BORDER-A3_013040.dwg / AG03A3_013040.dwg / 17.05.2004

FIELD	
INSTRUMENT	JUNCTION BOX

Substation 1

340-NSP-36

MCC : 385CC11E

FEEDER : +59.15

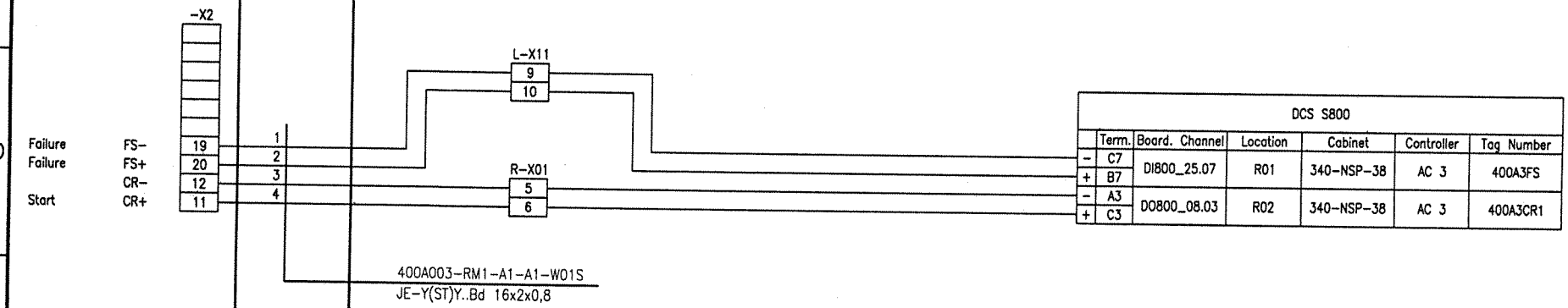

DCS S800						
	Term.	Board. Channel	Location	Cabinet	Controller	Tag Number
-	C7	DI800_25.07	R01	340-NSP-38	AC 3	400A3FS
+	B7					
-	A3	DO800_08.03	R02	340-NSP-38	AC 3	400A3CR1
+	C3					

Document-ID-BAR-Code

Rev.	Date	Name	Date	Name	Date	Name	Description	Acc. Code
		Drawn/Prepared		Checked		Approved		

Pro. Unit	TON	Cat. Code	Acc. Code	Status
Con. Unit	Type of Document: DH	Order No.	Scale	Tot. Sheets

	Date	Name
Drawn	20.09.2006	Hielscher
Prepared	20.09.2006	Hielscher
Checked	20.09.2006	Heuer
Approved	20.09.2006	Heuer

UAN	Code: Document ID	Part	Rev.	Group
01-3040	UD-EL-G00-FS-0001		00	

Uhde

All rights reserved © Uhde GmbH

AMMONIA / UREA PROJECT SUEZ II

Designation: Wiring diagram 400A002-RM1-A1

Store Location: Server \\p013040.kud.krupp.com\013040-ADA

Store Location: Folder \EI-ET\DH_el-wiring-diag\

Store Name: 01-3040_400A003-RM1-A1_000_00.dwg

ISO A3

BORDER-A3_013040.dwg / A003A3_013040.dwg / 17.05.2004

FIELD	
INSTRUMENT	JUNCTION BOX

Substation 1

340-NSP-36

MCC : 385CC11E

FEEDER : +59.18

DCS S800						
	Term.	Board. Channel	Location	Cabinet	Controller	Tag Number
-	A3	D0800_08.04	R02	340-NSP-38	AC 3	400A3CR2
+	C3					

Document-ID-BAR-Code

Rev.	Date	Name	Date	Name	Date	Name	Description	Acc. Code
		Drawn/Prepared		Checked		Approved		

Pro. Unit	TON	Cat. Code	Acc. Code	Status
Con. Unit	Type of Document: DH	Order No.	Scale	Tot. Sheets

UAN	Code: Document ID	Part	Rev.	Group
01-3040	UD-EL-G00-FS-0001		00	

	Date	Name
Drawn	20.09.2006	Hielscher
Prepared	20.09.2006	Hielscher
Checked	20.09.2006	Heuer
Approved	20.09.2006	Heuer

Uhde

All rights reserved © Uhde GmbH

AMMONIA / UREA PROJECT SUEZ II

Designation
Wiring diagram
400A002-RM1-A1

Store Location: Server
\\p013040.kud.krupp.com\013040-ADA

Store Location: Folder
\EI-ET\DH_el-wiring-diag\

Store Name
01-3040_400A003-RM2-A1_000_00.dwg

ISO A3

BORDER-A3_013040.dwg / A003A3_013040.dwg / 17.05.2004

FIELD	
INSTRUMENT	JUNCTION BOX

Substation 1

340-NSP-36

MCC : 385CC11E

FEEDER : +51.26

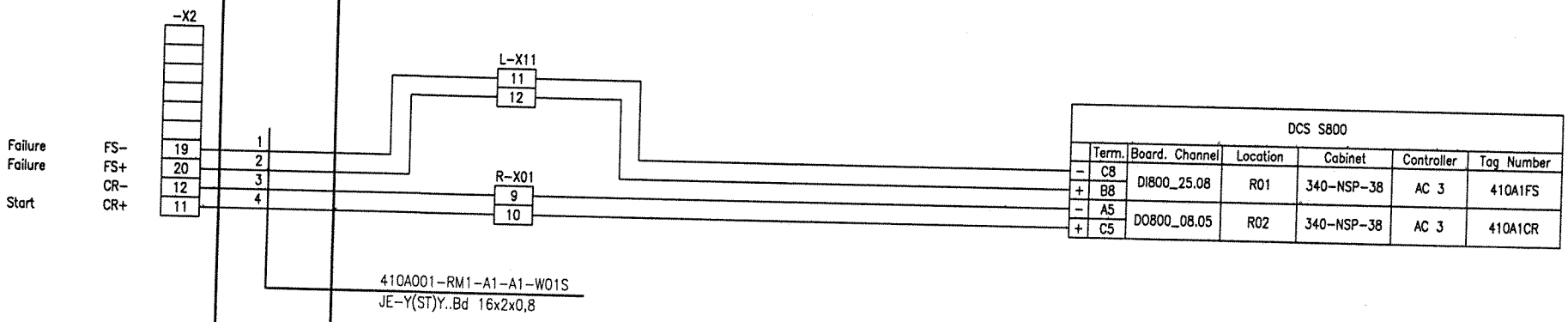

DCS S800						
	Term.	Board. Channel	Location	Cabinet	Controller	Tag Number
-	C8	DI800_25.08	R01	340-NSP-38	AC 3	410A1FS
+	B8					
-	A5	DO800_08.05	R02	340-NSP-38	AC 3	410A1CR
+	C5					

Document-ID-BAR-Code

Rev.	Date	Name	Date	Name	Date	Name	Description	Acc. Code
	Drawn/Prepared		Checked		Approved			

Pro. Unit	TON	Cat. Code	Acc. Code	Status
Con. Unit	Type of Document: DH	Order No.	Scale	Tot. Sheets

Code				
UAN	Document ID	Part	Rev.	Group
01-3040	UD-EL-G00-FS-0001		00	

	Date	Name
Drawn	20.09.2006	Hielscher
Prepared	20.09.2006	Hielscher
Checked	20.09.2006	Heuer
Approved	20.09.2006	Heuer

Uhde

All rights reserved © Uhde GmbH

AMMONIA / UREA PROJECT SUEZ II

Designation
Wiring diagram
410A001-RM1-A1

Store Location: Server
\\p013040.kud.krupp.com\013040-ADA

Store Location: Folder
\EI-ET\DH_el-wiring-diag\

Store Name
01-3040_410A001-RM1-A1_000_00.dwg

ISO A3

BORDER-A3_013040.dwg / A03A3_013040.dwg / 17.05.2004

FIELD	
INSTRUMENT	JUNCTION BOX

Substation 1

340-NSP-36

MCC : 385CC11E

FEEDER : +57.08

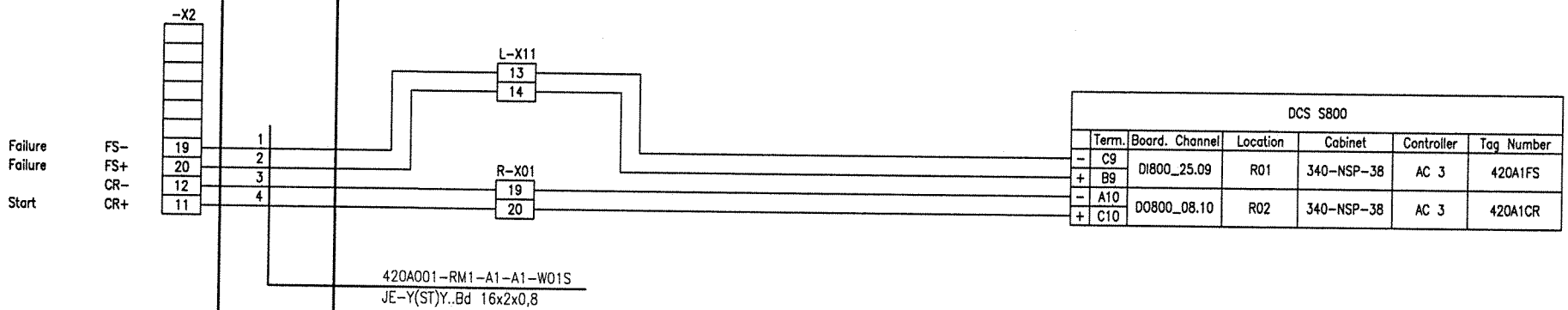

DCS S800						
	Term.	Board. Channel	Location	Cabinet	Controller	Tag Number
-	C9	DI800_25.09	R01	340-NSP-38	AC 3	420A1FS
+	B9					
-	A10	DO800_08.10	R02	340-NSP-38	AC 3	420A1CR
+	C10					

Document-ID-BAR-Code

Rev.	Date	Name	Date	Name	Date	Name	Description	Acc. Code
		Drawn/Prepared		Checked		Approved		

UAN	Code: Document ID	Part	Rev.	Group
01-3040	UD-EL-G00-FS-0001		00	

Uhde

All rights reserved © Uhde GmbH

Pro. Unit	TON	Cat. Code	Acc. Code	Status
Con. Unit	Type of Document: DH	Order No.	Scale	Tot. Sheets

	Date	Name
Drawn	20.09.2006	Hielscher
Prepared	20.09.2006	Hielscher
Checked	20.09.2006	Heuer
Approved	20.09.2006	Heuer

AMMONIA / UREA
PROJECT
SUEZ II

Designation
Wiring diagram
420A001-RM1-A1

Store Location: Server
\\p013040.kud.krupp.com\013040-ADA

Store Location: Folder
\EI-ET\DH_el-wiring-diag\

Store Name
01-3040_420A001-RM1-A1_000_00.dwg

BORDER-A3_013040.dwg / A003A3_013040.dwg / 17.05.2004

ISO A3

FIELD		Substation 1
INSTRUMENT	JUNCTION BOX	340-NSP-36

MCC : 385CC11E

FEEDER : +57:10

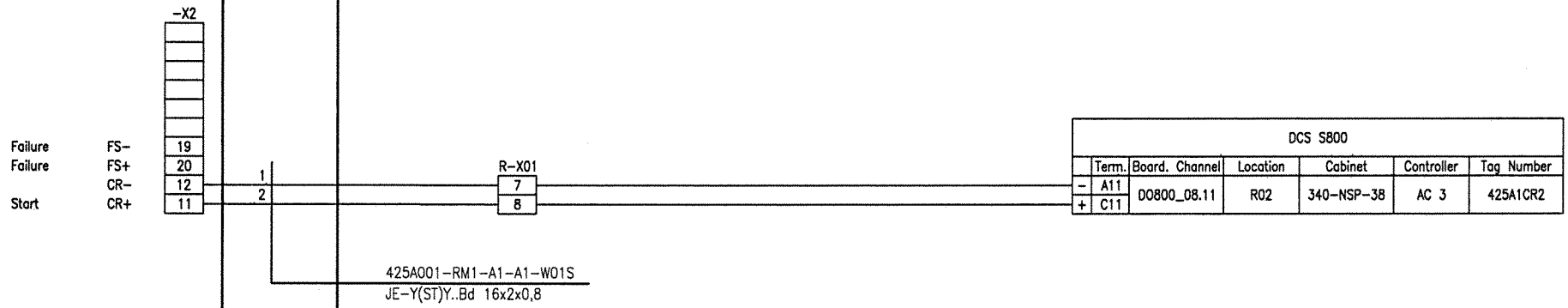

DCS S800						
	Term.	Board. Channel	Location	Cabinet	Controller	Tag Number
-	A11	D0800_08.11	R02	340-NSP-38	AC 3	425A1CR2
+	C11					

Document-ID-BAR-Code

Rev.	Date	Name	Date	Name	Date	Name	Description	Acc. Code
	Drawn/Prepared		Checked		Approved			

UAN	Document ID	Part	Rev.	Group
01-3040	UD-EL-G00-FS-0001		00	

Code

Pro. Unit	TON	Cat. Code	Acc. Code	Status
Con. Unit	Type of Document: DH	Order No.	Scale	Tot. Sheets

	Date	Name
Drawn	20.09.2006	Hielscher
Prepared	20.09.2006	Hielscher
Checked	20.09.2006	Heuer
Approved	20.09.2006	Heuer

Uhde

All rights reserved © Uhde GmbH

AMMONIA / UREA PROJECT SUEZ II

Designation
Wiring diagram
425A001-RM1-A1

Store Location: Server
\\p013040.kud.krupp.com\013040-ADA

Store Location: Folder
\EI-ET\DH_el-wiring-diag\

Store Name
01-3040_425A001-RM1-A1_000_00.dwg

ISO A3

BORDER-A3_013040.dwg / AG03A3_013040.dwg / 17.05.2004

FIELD		Substation 1
INSTRUMENT	JUNCTION BOX	340-NSP-36

MCC : 385CC11E

FEEDER : +45.10C

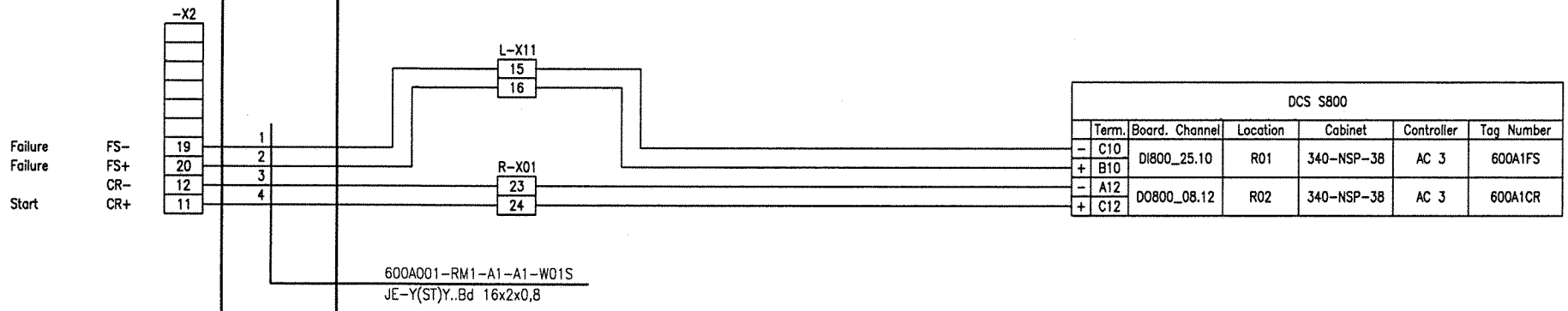

DCS S800						
	Term.	Board. Channel	Location	Cabinet	Controller	Tag Number
-	C10	DI800_25.10	R01	340-NSP-38	AC 3	600A1FS
+	B10					
-	A12	DO800_08.12	R02	340-NSP-38	AC 3	600A1CR
+	C12					

Document-ID-BAR-Code

Rev.	Date	Name	Date	Name	Date	Name	Description	Acc. Code
		Drawn/Prepared		Checked		Approved		

Pro. Unit	TON	Cat. Code	Acc. Code	Status
Con. Unit	Type of Document: DH	Order No.	Scale	Tot. Sheets

Code				
UAN	Document ID	Part	Rev.	Group
01-3040	UD-EL-G00-FS-0001		00	

	Date	Name
Drawn	20.09.2006	Hielscher
Prepared	20.09.2006	Hielscher
Checked	20.09.2006	Heuer
Approved	20.09.2006	Heuer

AMMONIA / UREA PROJECT SUEZ II

Uhde

All rights reserved © Uhde GmbH

Designation
Wiring diagram
600A001-RM1-A1

Store Location: Server
\\p013040.kud.krupp.com\013040-ADA

Store Location: Folder
\Ei-ET\DH_el-wiring-diag\

Store Name
01-3040_600A001-RM1-A1_000_00.dwg

ISO A3

BORDER-A3_013040.dwg / A03A3_013040.dwg / 17.05.2004